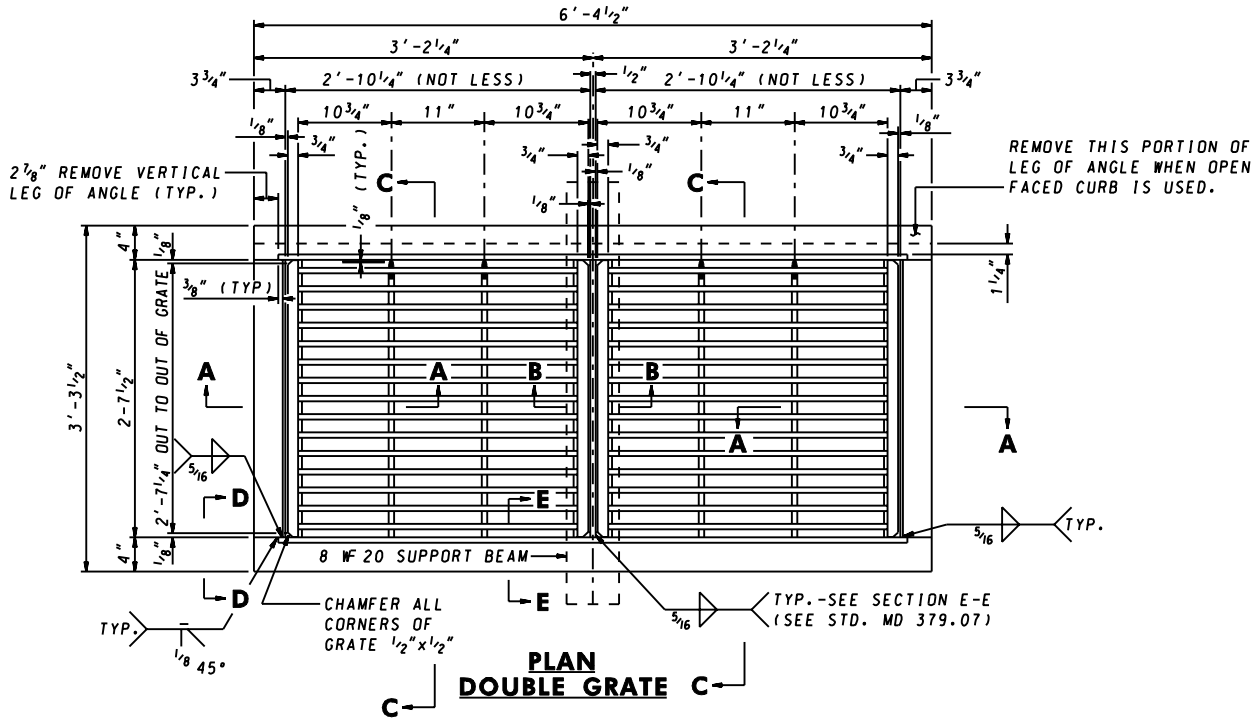

PLAN
DOUBLE GRATE

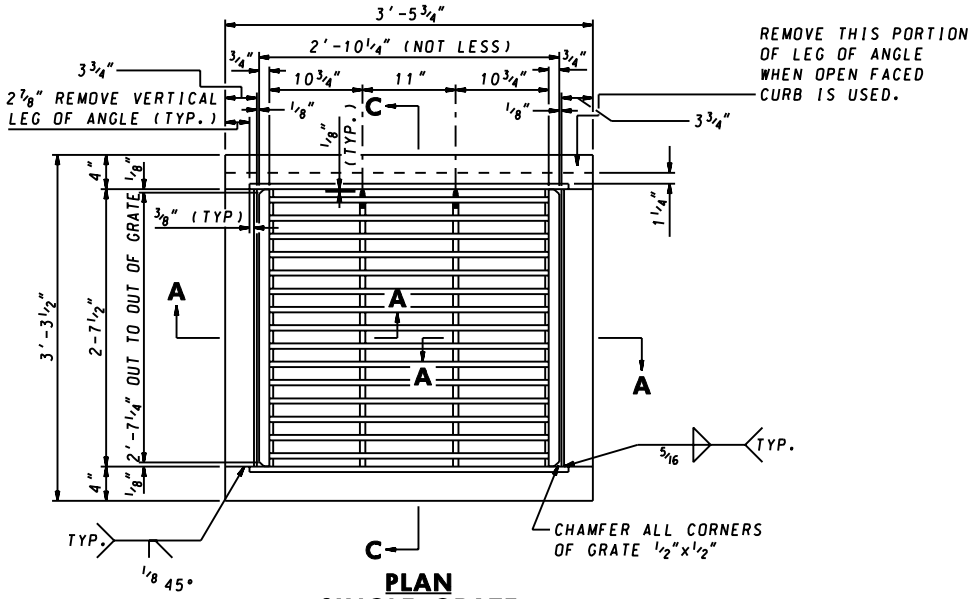

PLAN
SINGLE GRATE

1. FRAMES & GRATES TO BE SQUARE, FLAT & TRUE.
2. STRUCTURAL STEEL SHALL BE A.S.T.M. DESIGNATION A-36.
3. FRAMES AND GRATES TO BE GALVANIZED AFTER FABRICATION IN ACCORDANCE WITH A.S.T.M. DESIGNATION A-123
4. APPROX. WEIGHTS:
   DOUBLE FRAME=280# DOUBLE GRATE=520#
   SINGLE FRAME=175# SINGLE GRATE=260#
5. SEE LATEST S.H.A. SPECIFICATIONS

SPECIFICATION	CATEGORY CODE ITEMS
APPROVED	Kirk G. McCallum DIRECTOR – OFFICE OF HIGHWAY DEVELOPMENT

APPROVAL • SHA REVISIONS		APPROVAL • FEDERAL HIGHWAY ADMINISTRATION	
APPROVAL	4-23-70	APPROVAL	5-5-70
REVISED	10-1-01	REVISED	2-8-83
REVISED		REVISED	
REVISED		REVISED	

Maryland Department of Transportation
STATE HIGHWAY ADMINISTRATION
STANDARDS FOR HIGHWAYS AND INCIDENTAL STRUCTURES

STANDARD TYPE S INLET & COMBINATION STEEL FRAME & GRATE ALTERNATE

STANDARD NO. MD 379.06