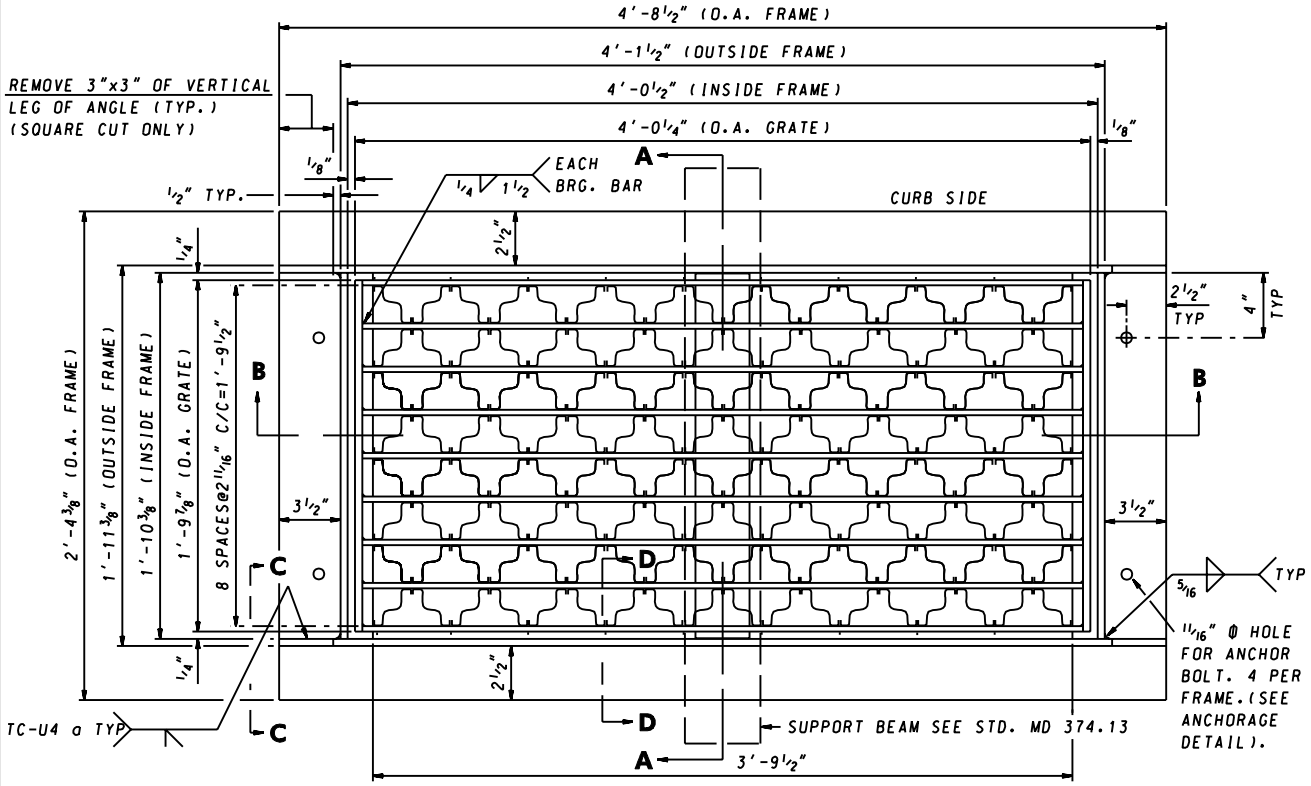

PLAN

GENERAL NOTES

1. FRAMES & GRATES TO BE SQUARE, FLAT & TRUE.
2. STRUCTURAL STEEL SHALL BE A.S.T.M. A-36.
3. FRAMES & GRATES TO BE GALVANIZED AFTER FABRICATION IN ACCORDANCE WITH A.S.T.M. A-123.
4. SEE LATEST S.H.A. SPECIFICATIONS.

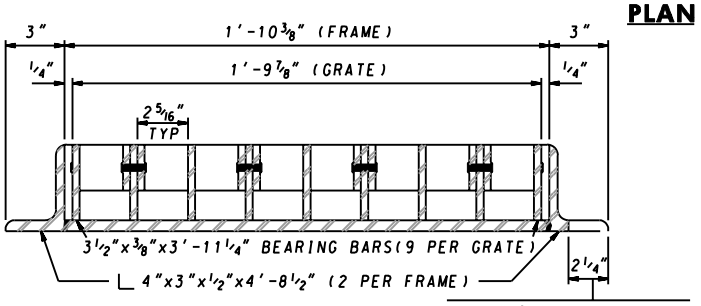

SECTION A-A

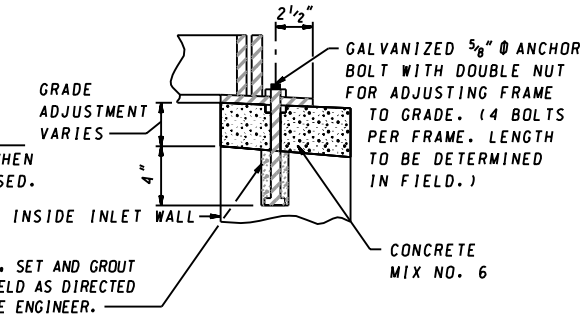

FRAME ANCHORAGE DETAIL

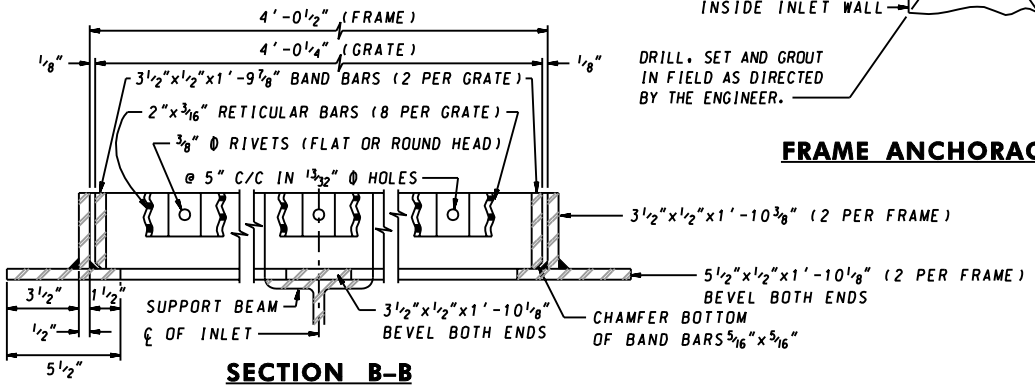

SECTION B-B

SPECIFICATION 305	CATEGORY CODE ITEMS
APPROVED	Kirk G. McCallum DIRECTOR – OFFICE OF HIGHWAY DEVELOPMENT

APPROVAL • SHA REVISIONS		APPROVAL • FEDERAL HIGHWAY ADMINISTRATION	
APPROVAL	2-28-75	APPROVAL	5-12-75
REVISED	10-1-01	REVISED	8-1-84
REVISED		REVISED	
REVISED		REVISED	

Maryland Department of Transportation
STATE HIGHWAY ADMINISTRATION

STANDARDS FOR HIGHWAYS AND INCIDENTAL STRUCTURES

STANDARD NR & NRM INLET FRAME & GRATE

STANDARD NO. MD 374.12