Fig. 1.

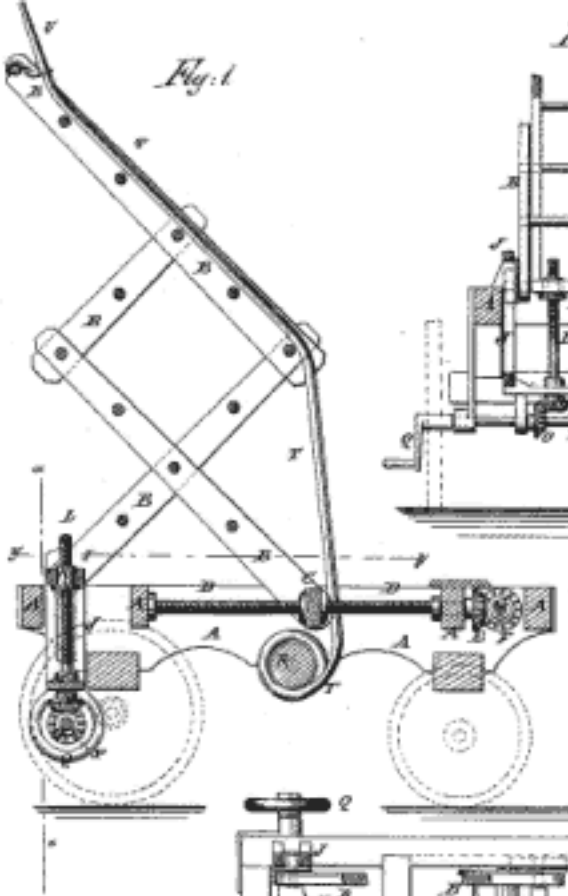

Fig. 2.

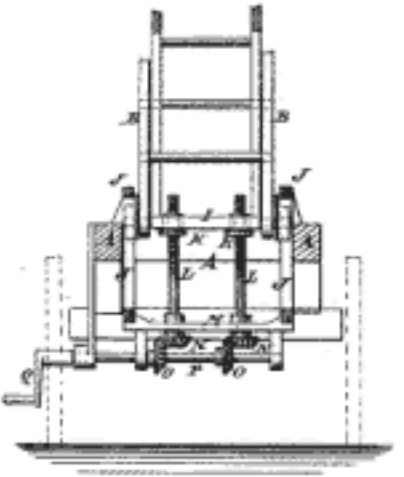

Fig. 3.

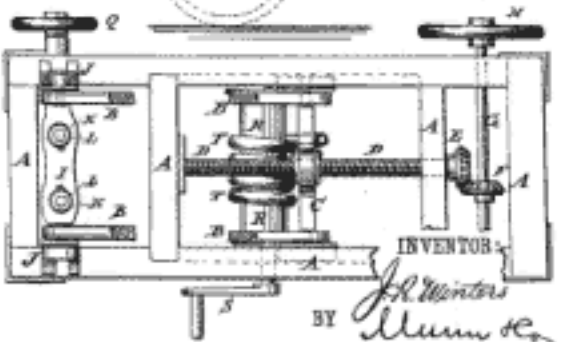

WITNESSES:

Chas. Nida.

A. Sedgwick

INVENTOR:

J. R. Winters

BY Munn & Co.