MONTGOMERY COUNTY MARYLAND
DEPARTMENT OF PUBLIC WORKS

FINAL APPROVAL

DATE APRIL 12 1965

BY

S.D. #R-37, 65074 Y

WASHINGTON SUBURBAN SANITARY COMMISSION
APPROVED APR. 1, 1965
FOR STORM DRAINS ONLY

SUBJECT TO PRIOR INSTALLATION OF WATER & SEWER AND PAYMENT FOR MOVING ANY WSSC STRUCTURES AFFECTED.
THE STORM DRAINAGE STRUCTURES SHOWN ON THIS PLAN ARE APPROVED AS TO DESIGN AS A COMPONENT PART OF THE STORM DRAINAGE SYSTEM FOR THIS DRAINAGE AREA. THIS COMMISSION ASSUMES NO RESPONSIBILITY WHATSOEVER FOR ANY DAMAGE WHICH MAY BE CAUSED TO ADJACENT PROPERTY OWNERS, OR TO OWNERS DOWNSTREAM, BY REASON OF THE INSTALLATION OF THE DRAINAGE STRUCTURES SHOWN HEREON.

SENIOR DESIGNING ENGINEER

*See Montg. Co. Director of Public Works' letter dated Sept. 6, 1961 requesting elimination of protective gate. Structure #20

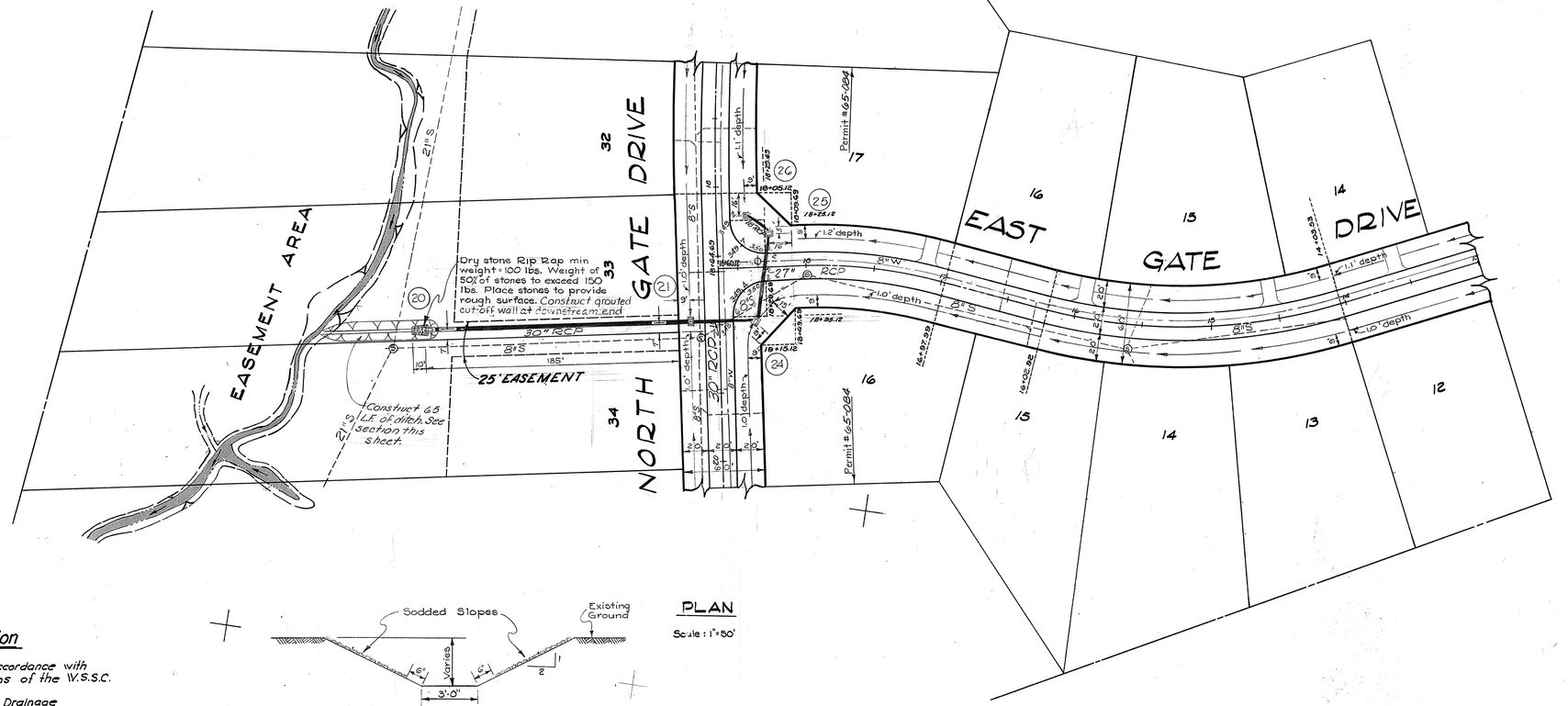


PLAN
Scale: 1"=50'

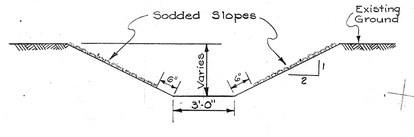


TYPICAL DITCH SECTION
NO SCALE

# GENERAL NOTES
## For Storm Drain Construction

1. All Storm Drains shall be constructed in accordance with the latest Edition of the General Specifications of the W.S.S.C.
2. Type of structures to the Standard Storm Drainage Details of the W.S.S.C., unless otherwise noted.
3. Information concerning underground utilities was obtained from available records, but the Contractor must determine the exact location and elevations of the mains by digging test pits by hand at all utilities crossings, well in advance of trenching. If clearances are less than shown on this plan or six (6) inches, whichever is less, contact the Storm Drain Section of the Washington Suburban Sanitary Commission before proceeding with construction.
4. All storm drain construction shown in this plan to be maintained by Montgomery County Department of Public Works.

| STRUCTURE SCHEDULE | | | |
|---|---|---|---|
| No. | Type | Top Elevation | Remarks |
| 20 | Conc. Flared End Section W/conc. cut-off wall | | Gray Conc. Pipe Co. or equal |
| 21 | K Inlet | 347.30 | MSRC Standard (Mod) |
| 24 | K Inlet | 347.30 | " " " |
| 25 | K Inlet | 348.80 | " " " |
| 26 | J Inlet | 347.80 | " " " |

See detail Sheet 2 of 3.

| PIPE SCHEDULE | | |
|---|---|---|
| Size | Type | Length |
| 18" | RCP III | 18' |
| 27" | RCP IV | 62' |
| 30" | RCP III | 185' |
| 30" | RCP IV | 44' |

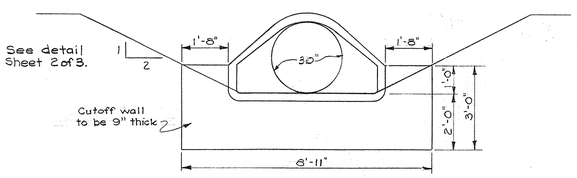


DETAIL OF CUTOFF WALL ON FLARED END SECTION
Scale: 3/8"=1'
Concrete Volume = 0.65 cubic yard
Use W.S.S.C. Class B Concrete

✳ - Contact Mr. Lee (AP-7-7700) W.S.S.C. System Maintenance Engineer 48 hours before excavating in the vicinity of 8" Water Mains. Backfill to be made under supervision of M.&O. Division.

EASEMENT AREA

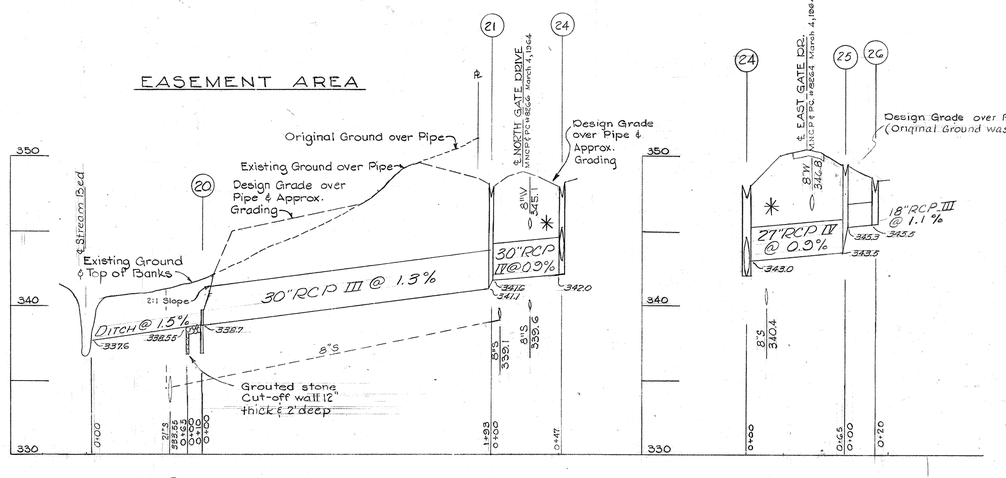


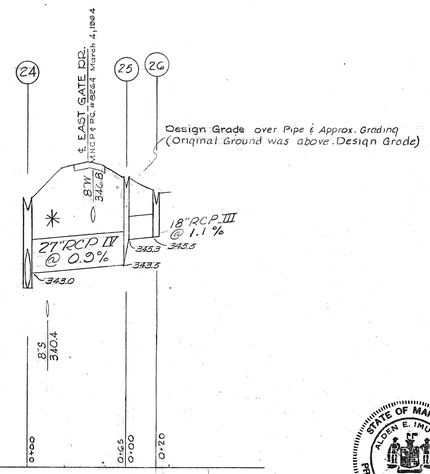


PROFILES
Scale: Vert. 1"=5'
Hor. 1"=50'

STATE OF MARYLAND
ALDEN E. IMUS JR.
No. 2041
REGISTERED
PROFESSIONAL ENGINEER

Alden E. Imus Jr.

| DATE | REVISION |
|---|---|
| | |

DRAFTING: M.W.S.
CHECK: P.H.
DESIGN: M.C.S.
CHECK: P.H.

DEVELOPER
SI-CO, INC.
1400 Layhill Road
Silver Spring, Md.
682-2800

CIVIL ENGINEERS ■ LAND PLANNERS ■ LAND SURVEYORS
THOMAS G. OYSTER AND ASSOCIATES INC.
2419 REEDIE DRIVE ■ WHEATON ■ MARYLAND ■ 949-2011

PAVING AND STORM DRAINS

EAST GATE DRIVE

NORTH GATE DRIVE

Layhill Village
MONTGOMERY COUNTY, MARYLAND

| DATE | JOB NO. |
|---|---|
| September 1964 | 1787-A1 |
| SCALE | SHEET NO. |
| As shown | 1 OF 3 |

CE487-893-1

PS-068

SD FILE NO. 909

S.D. #D-37, 65074 Y
WASHINGTON SUBURBAN SANITARY COMMISSION
APPROVED Apr. 1, 1965
FOR STORM DRAINS ONLY
SUBJECT TO PRIOR INSTALLATION OF WATER & SEWER AND PAYMENT FOR MOVING ANY W.S.S.C. STRUCTURE AFFECTED.
THE SIZE & LOCATION OF STRUCTURES SHOWN ON THIS PLAN ARE APPROVED AS TO DESIGN AS A COMPONENT PART OF THE STORM DRAINAGE SYSTEM FOR THIS DRAINAGE AREA. THE COMMISSION ASSUMES NO RESPONSIBILITY WHATSOEVER FOR ANY DAMAGE WHICH MAY BE CAUSED TO ADJACENT PROPERTY OWNERS, OR TO OWNERS DOWNSTREAM, BY REASON OF THE INSTALLATION OF THE DRAINAGE STRUCTURES SHOWN HEREON.
John A. Marx
SENIOR DESIGNING ENGINEER

#20

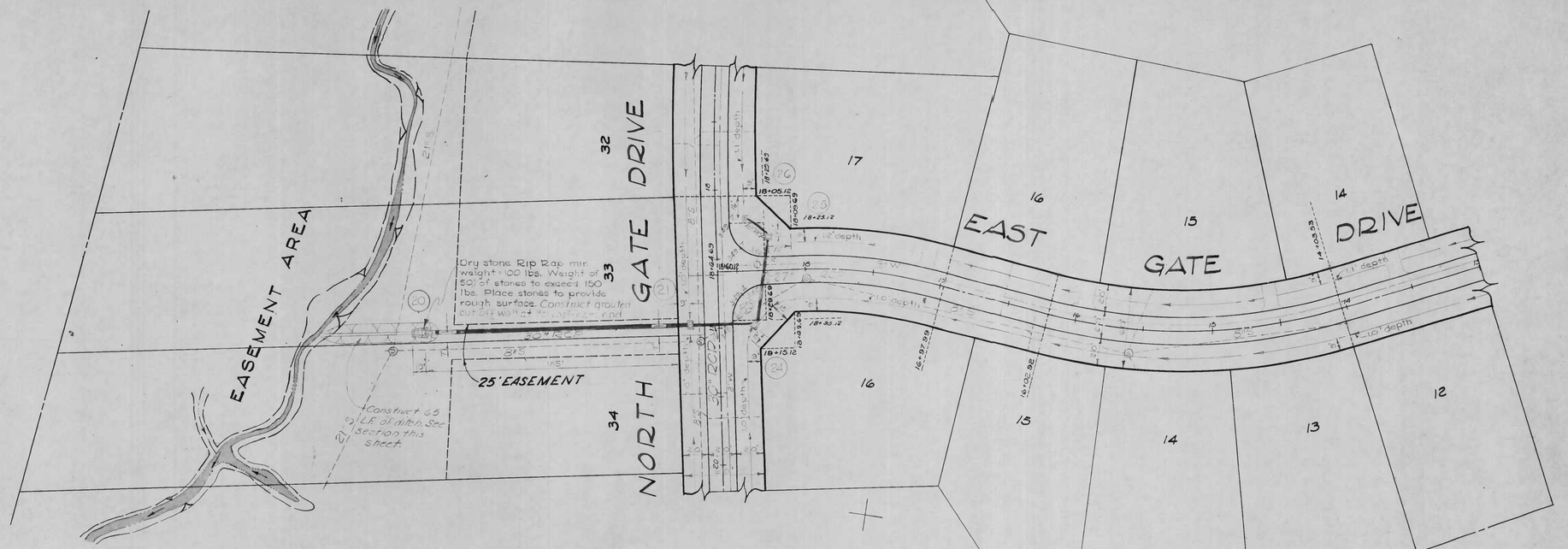


PLAN
Scale: 1"=50'

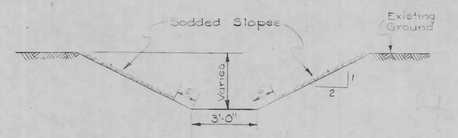


TYPICAL DITCH SECTION
NO SCALE

# GENERAL NOTES
## For Storm Drain Construction

1. All Storm Drains shall be constructed in accordance with the latest Edition of the General Specifications of the W.S.S.C.
2. Type of structures to the Standard Storm Drainage Details of the W.S.S.C., unless otherwise noted.
3. Information concerning underground utilities was obtained from available records, but the Contractor must determine the exact location and elevations of the mains by digging test pits by hand at all utilities crossings, well in advance of trenching. If clearances are less than shown on this plan or six (6) inches, whichever is less, contact the Storm Drain Section of the Washington Suburban Sanitary Commission before proceeding with construction.
4. All storm drain construction shown in this plan to be maintained by Montgomery County Department of Public Works.

Sewage Permit
66-24-0934
July 28, 1965

* - Contact Mr Lee (AP-7-7700) W.S.S.C. System Maintenance Engineer 48 hours before excavating in the vicinity of 8" Water Mains. Backfill to be made under supervision of M.&O. Division.

| STRUCTURE SCHEDULE | | | |
|---|---|---|---|
| No | Type | Top Elevation | Remarks |
| 20 | Conc Flared End Section W/conc. cut-off wall | | Gray Conc. Pipe Co. or equal |
| 21 | K Inlet | 347.30 | MSRC Standard (Mod) |
| 24 | K Inlet | 347.30 | " " " |
| 25 | K Inlet | 348.80 | " " " |
| 26 | J Inlet | 347.80 | " " " |

| PIPE SCHEDULE | | |
|---|---|---|
| Size | Type | Length |
| 18" | RCP III | 15' |
| 27" | RCP IV | 62' |
| 30" | RCP III | 185' |
| 30 | RCP IV | 44' |

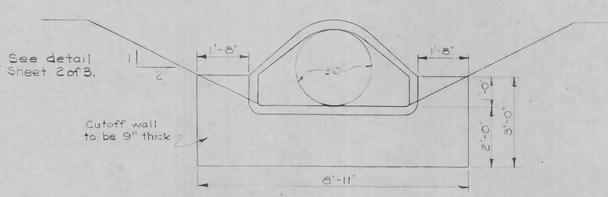


DETAIL OF CUTOFF WALL ON FLARED END SECTION
Scale: 3/4" = 1'
Concrete Volume = 0.65 cubic yard
Use W.S.S.C. Class B Concrete

EASEMENT AREA

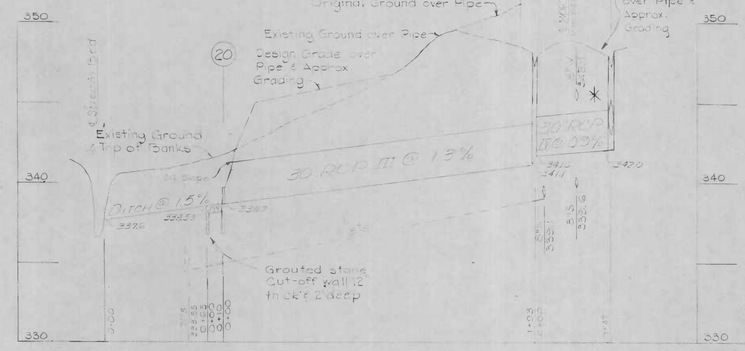


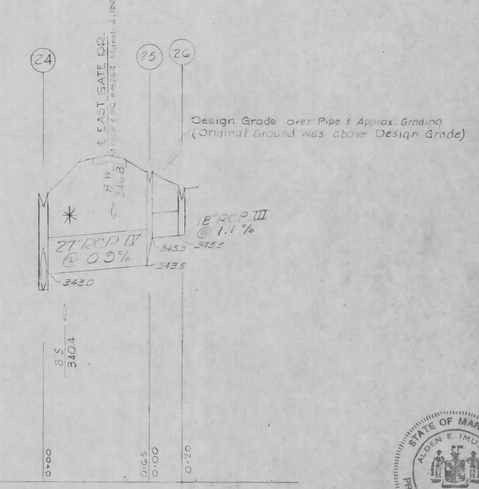


PROFILES
Scale: Vert. 1"=5'
Hor. 1"=50'

Alden E. Imus Jr.
409

| DATE | REVISION |
|---|---|
| | |

DRAFTING: M.W.S.
CHECK: D.H.
DESIGN: M.G.S.
CHECK: D.H.

DEVELOPER
SI-CO, INC.
1400 Layhill Road
Silver Spring, Md.
682-2800

CIVIL ENGINEERS ■ LAND PLANNERS ■ LAND SURVEYORS
THOMAS G. OYSTER AND ASSOCIATES INC.
2419 REEDIE DRIVE ■ WHEATON ■ MARYLAND ■ 949-2011

PAVING AND STORM DRAINS

EAST GATE DRIVE

Layhill Village
MONTGOMERY COUNTY, MARYLAND

NORTH GATE DRIVE

| DATE | JOB NO. |
|---|---|
| September 1964 | 1787-A1 |
| SCALE | SHEET NO. |
| As shown | 1 OF 3 |

CE 487-893-2

SD FILE NO. 909

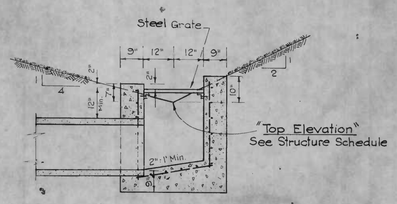


SECTION A-A

## GENERAL NOTES

**STEEL**: Vert.: ½" ø bars, 6" c.c.
Hor.: ½" ø bars, 6" c.c.
Bott. ½" ø bars, 6" c.c.

* **CONCRETE**: W.S.S.C. Class A Concrete

**GRATE**: Grate is made of 1"x1" square bars, butt welded, see SRC Detail IL 15. Grating to be fastened to inlet by welding to two 3"x2"x⅜" Ls-3'-10" long which shall be bolted to inlet walls with ½"x4" expansion bolts @ 9" c.c., (10 bolts required) 1"x1" cross bars shall be spaced 3" c.c.

* Brick may be used in lieu of concrete.

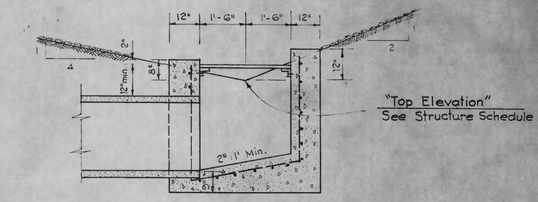


SECTION A-A

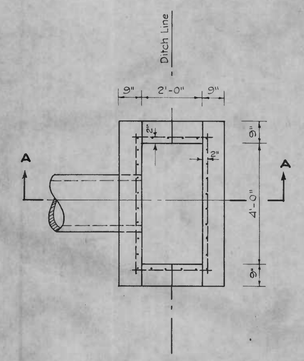


PLAN
(Grate Not Shown)

## "J" INLET

Scale: 3/8" = 1'-0"

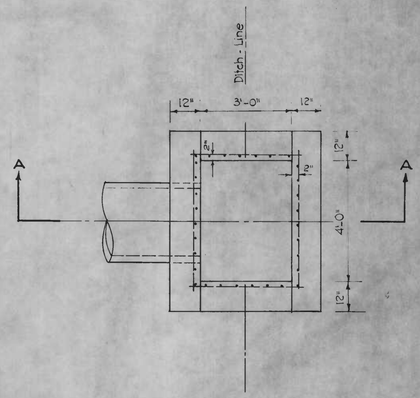


PLAN
(Grate Not Shown)

## "K" INLET

Scale: 3/8" = 1'-0"

S.D. # D-37, 65074 Y
WASHINGTON SUBURBAN SANITARY COMMISSION
APPROVED Apr. 1, 1965
John A. Marx
SENIOR DESIGNER (ENGINEER)

## STRUCTURE No. 26

## STRUCTURE No. 21, 24 & 25

STATE OF MARYLAND
ALDEN E. IMUS JR.
No. 3041
REGISTERED
PROFESSIONAL ENGINEER

Alden E. Imus Jr.

904

| DATE | REVISION | DRAFTING: J.F. CHECK: DESIGN: CHECK: | DEVELOPER SI-CO, INC. 1400 Layhill Road Silver Spring-Md. 682-2800 | CIVIL ENGINEERS ■ LAND PLANNERS ■ LAND SURVEYORS THOMAS G. OYSTER AND ASSOCIATES INC. 2419 REEDIE DRIVE ■ WHEATON ■ MARYLAND ■ 949-2011 | MSRC TYPE INLETS MODIFIED | EAST GATE DRIVE | Layhill Village MONTGOMERY COUNTY, MARYLAND | NORTH GATE DRIVE | DATE September 1964 | JOB NO. 1787-A-1 |
|---|---|---|---|---|---|---|---|---|---|---|
| | | | | | | | | | SCALE As Shown | SHEET NO. 2 OF 3 |

CE487-893-3

SD FILE NO. 909

# GENERAL NOTES

1. All work in public right of ways shall be in accordance with the Standards and Specifications of the Montgomery County Road Construction Code.
2. Work shall not commence until the proper permits have been issued.
3. All curb returns shall have a radius of 25'.
4. All unpaved areas within right of ways and all slopes adjacent thereto shall be sodded.
5. No street surfacing shall be started until fine grading and sodding has been completed and inspected.

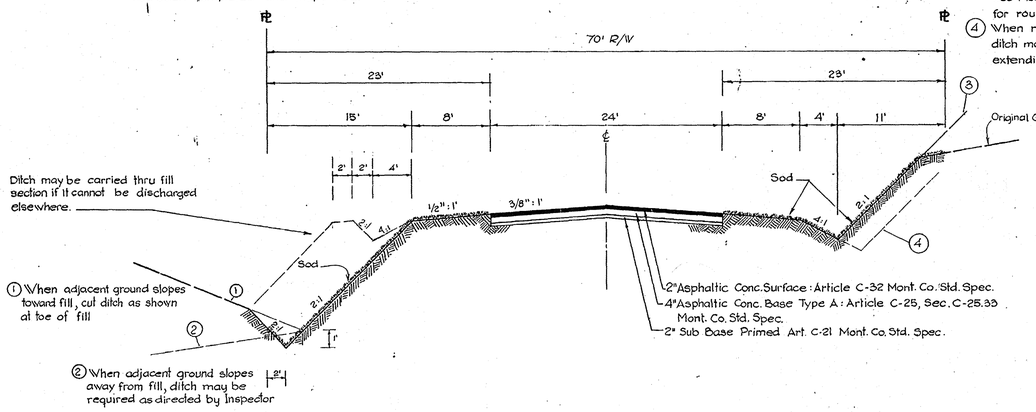


## 70' RIGHT OF WAY
### 24' PRIMARY OPEN SECTION PAVING
### PARTIAL WIDTH GRADING

Scale : Hor. = 1/8" = 1' ; Vert. = 1/4" = 1'

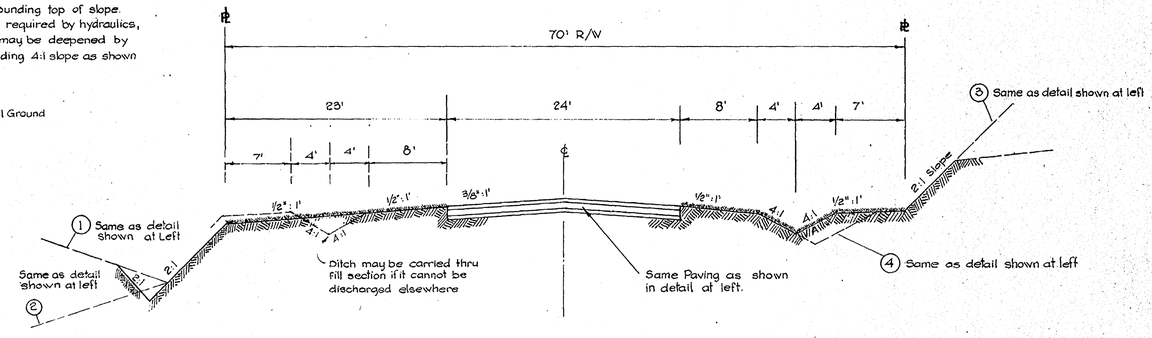


## 70' RIGHT OF WAY
### 24' PRIMARY OPEN SECTION PAVING
### FULL WIDTH GRADING

Scale : Hor. = 1/8" = 1' ; Vert. = 1/4" = 1'

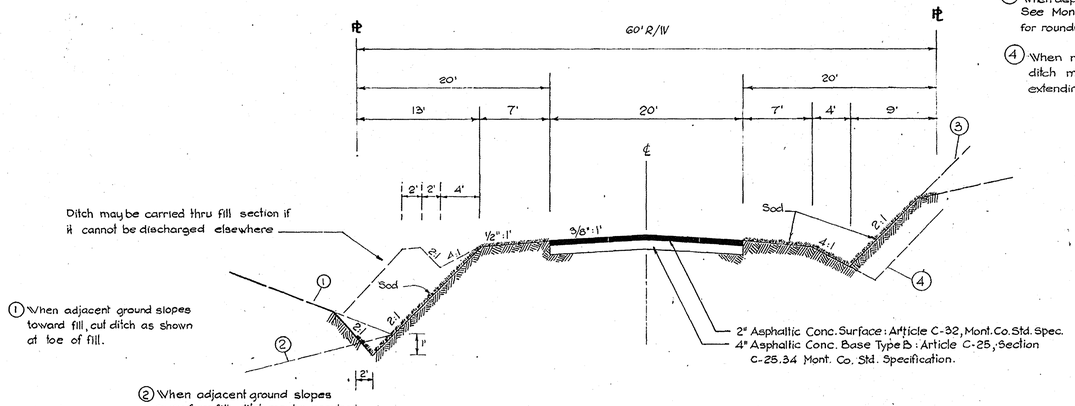


## 60' RIGHT OF WAY
### 20' SECONDARY OPEN SECTION PAVING
### PARTIAL WIDTH GRADING

Scale : Hor. = 1/8" = 1' ; Vert. = 1/4" = 1'

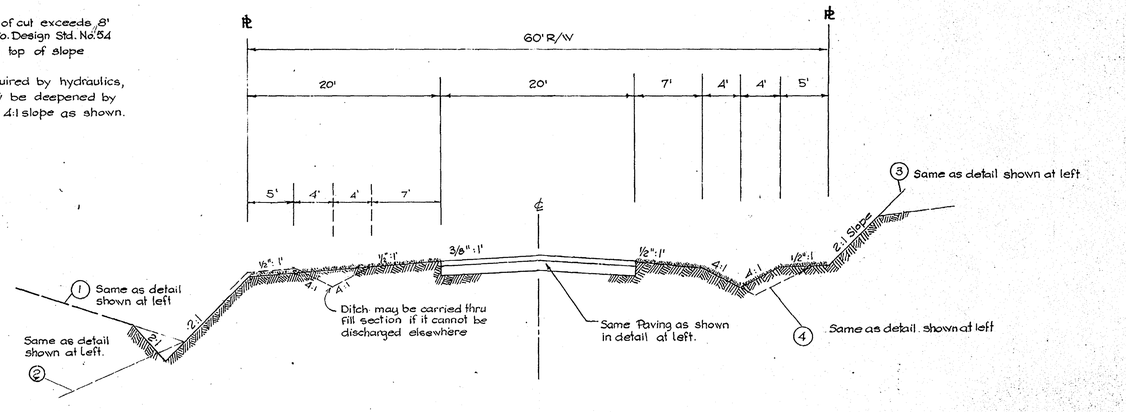


## 60' RIGHT OF WAY
### 20' SECONDARY OPEN SECTION PAVING
### FULL WIDTH GRADING

Scale : Hor. = 1/8" = 1' ; Vert. = 1/4" = 1'

S.D. # D-37, 65074Y
WASHINGTON SUBURBAN SANITARY COMMISSION
APPROVED Apr. 1, 1965
FOR STORM DRAINS ONLY
SENIOR DESIGNING ENGINEER

NOTE: All streets in Layhill Village to have full width grading.

909

| DATE | REVISION | |
|---|---|---|
| | | DRAFTING: |
| | | CHECK: |
| | | DESIGN: |
| | | CHECK: |

DEVELOPER
SI-CO INC.
1400 Layhill Road
Silver Spring Md.
622-2800

CIVIL ENGINEERS ■ LAND PLANNERS ■ LAND SURVEYORS
THOMAS G. OYSTER AND ASSOCIATES INC.
2419 REEDIE DRIVE ■ WHEATON ■ MARYLAND ■ 949-2011

MONTGOMERY COUNTY
PAVING STANDARDS

NORTH GATE DRIVE

Layhill Village

EAST GATE DRIVE

| DATE | JOB NO. |
|---|---|
| September 64 | 1787-A-1 |
| SCALE | SHEET NO. |
| As Shown | 3 OF 3 |

CE487-893-4

SD FILE NO. 909

Maryland State Archives