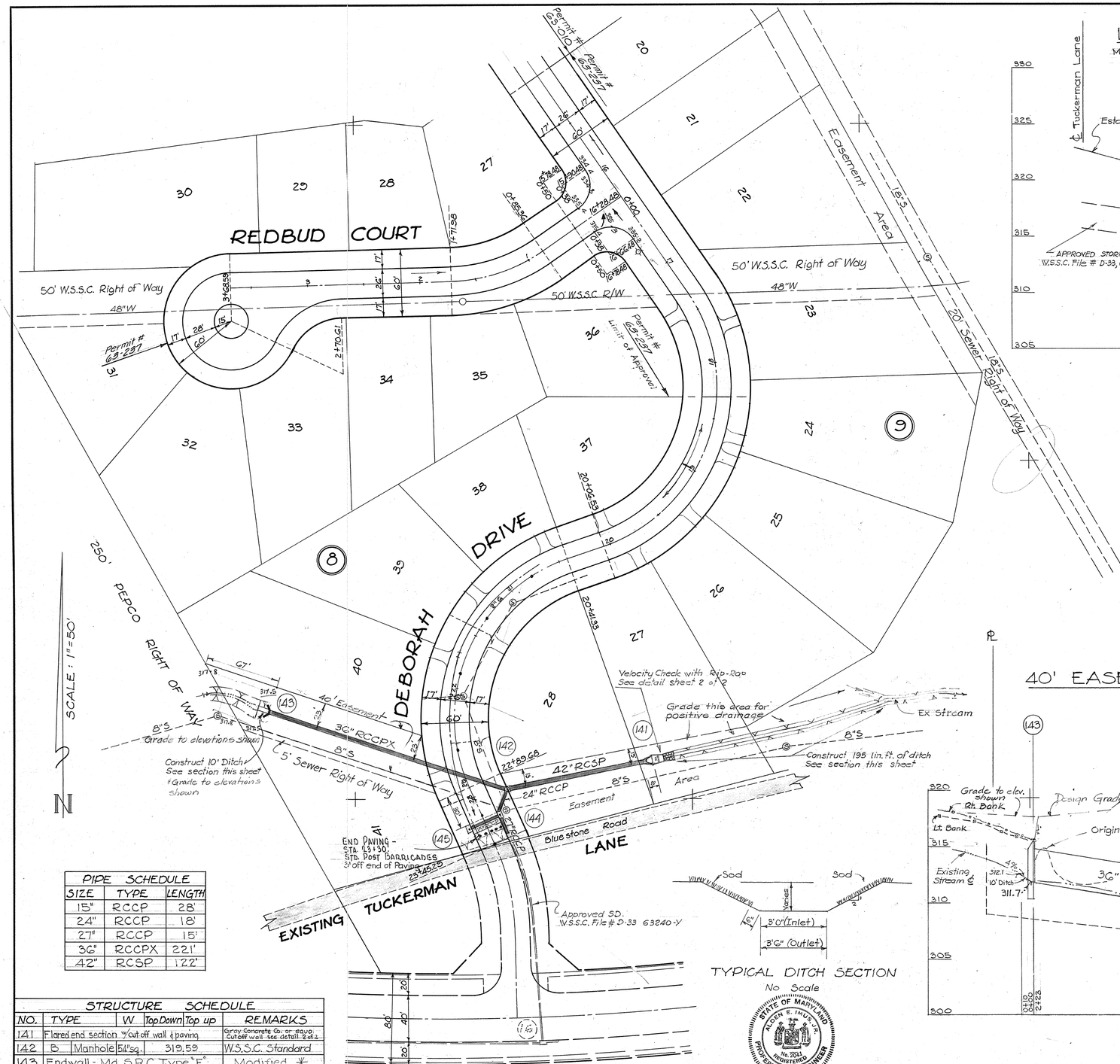

PIPE SCHEDULE		
SIZE	TYPE	LENGTH
15"	RCCP	28'
24"	RCCP	18'
27"	RCCP	15'
36"	RCCPX	221'
42"	RCSP	122'

STRUCTURE SCHEDULE						
NO.	TYPE		W	Top Down	Top up	REMARKS
141	Flared end section w/cut-off wall & paving					Grove Concrete Co. or equa. Cut off wall see detail 2 of 2
142	B.	Manhole	54"sq.	319.59		W.S.S.C. Standard
143	Endwall - Md. S.R.C. Type "F"					Modified *
144	A-5	Inlet	2.50	318.75	Sump	W.S.S.C. Standard
145	A-5	Inlet	2.50	318.75	Sump	" "

* Endwall to have two equal wings of "W" length @ 45° to pipe.

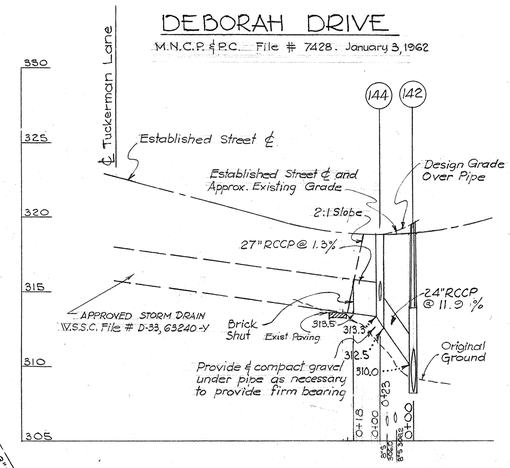

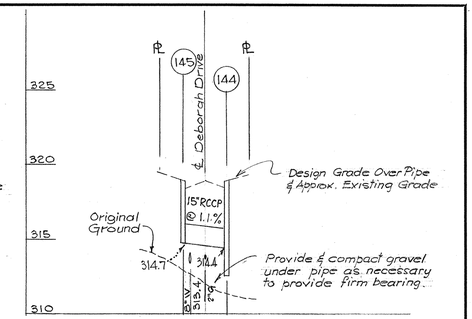

GENERAL NOTES
FOR STORM DRAIN CONSTRUCTION

1. All storm drains shall be constructed in accordance with the General Specifications of the Washington Suburban Sanitary Commission, adopted September 30, 1954.
2. Types of structures refer to the Washington Suburban Sanitary Commission's Standard Drainage Details unless otherwise noted.
3. Information concerning underground utilities was obtained from available records, but the Contractor must determined the exact location and elevation of the mains by digging test pits by hand at all utility crossings well in advance of trenching. If clearances are less than shown on this plan or six (6) inches, whichever is less, contact the Storm Drain Section of the Washington Suburban Sanitary Commission before proceeding with construction.
4. Storm drain construction shown on this plan to be maintained by Montgomery County Dept. of Public Works.

MONTGOMERY COUNTY MARYLAND
DEPARTMENT OF PUBLIC WORKS
FINAL APPROVAL
* Paving
DATE 8-21 1963
BY H. M. Fritz
* Redbud Ct - Limit Permit 63-010 to South line Lot 36, BK-5.
* Extension of Deborah Dr. to Sta. 23+30. 8-20-64

SD*D-35, 64173-Y

WASHINGTON SUBURBAN SANITARY COMMISSION
*APPROVED July 31, 1964
FOR STORM DRAINS ONLY

SUBJECT TO PRIOR INSTALLATION OF WATER & SEWER AND PAYMENT FOR MOVING ANY W.S.S.C STRUCTURES AFFECTED.
THE STORM DRAINAGE STRUCTURES SHOWN ON THIS PLAN ARE APPROVED AS TO DESIGN AS A COMPONENT PART OF THE STORM DRAINAGE SYSTEM FOR THIS DRAINAGE AREA. THIS COMMISSION ASSUMES NO RESPONSIBILITY WHATSOEVER FOR ANY DAMAGE WHICH MAY BE CAUSED TO ADJACENT PROPERTY OWNERS, OR TO OWNERS DOWNSTREAM, BY REASON OF THE INSTALLATION OF THE DRAINAGE STRUCTURES SHOWN HEREON.

SENIOR DESIGNING ENGINEER

*See Mont. Co. Director of Public Works' letter dated Sept. 6, 1961 regarding elimination of protective rate. Structure 141 & 143

*Subject to issuance of permit by Maryland State Department of Health

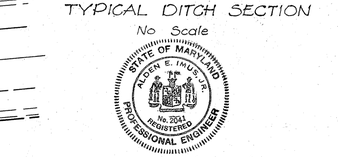

TYPICAL DITCH SECTION
No Scale

STATE OF MARYLAND — ALDEN E. INGRAM JR. — No. 2041 — REGISTERED PROFESSIONAL ENGINEER

Alden E. Ingram Jr.

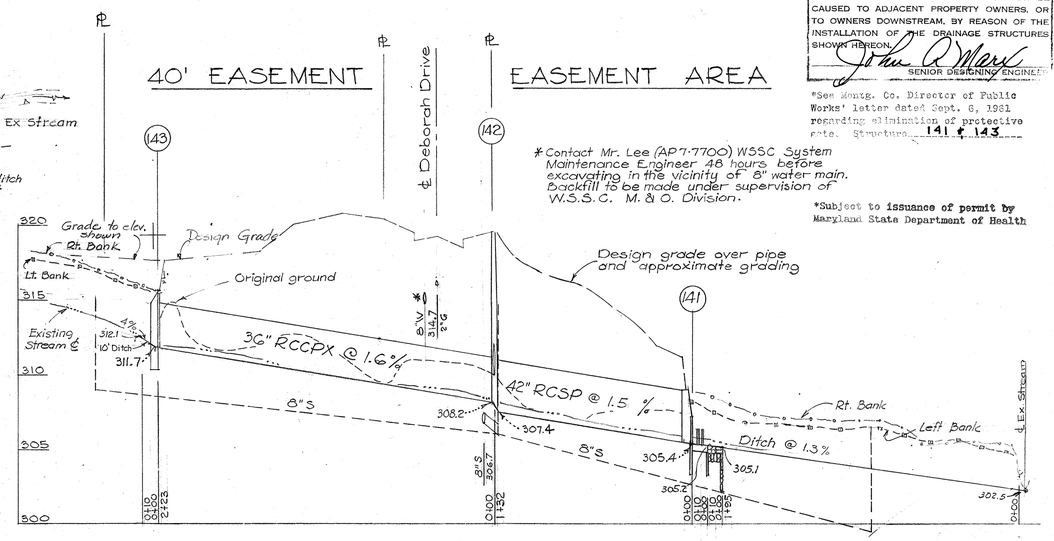

STORM DRAIN PROFILES
SCALE Hor. 1" = 50' Vert. 1" = 5'

DATE	REVISION
8-27-68	Driveways Added to plan
7-31-64	Gas Add'ed

DRAFTING: F.L.B.
CHECK: P.H.
DESIGN: J.R.
CHECK: P.H.

REGENCY ESTATES ASSOCIATES
14000 LAYHILL RD.
SILVER SPRING, MARYLAND

CIVIL ENGINEERS ■ LAND PLANNERS ■ LAND SURVEYORS
THOMAS G. OYSTER AND ASSOCIATES INC.
2419 REEDIE DRIVE ■ WHEATON ■ MARYLAND ■ 949-2011

PAVING AND STORM DRAIN PLAN

REGENCY ESTATES
MONTGOMERY COUNTY, MARYLAND
DEBORAH DRIVE, REDBUD COURT

DATE	JOB NO.
AUG. 63	1290-E-2
SCALE	SHEET NO.
As Shown	1 OF 2

P3-100
P4-068

CE487-845-1

SD FILE NO. 860

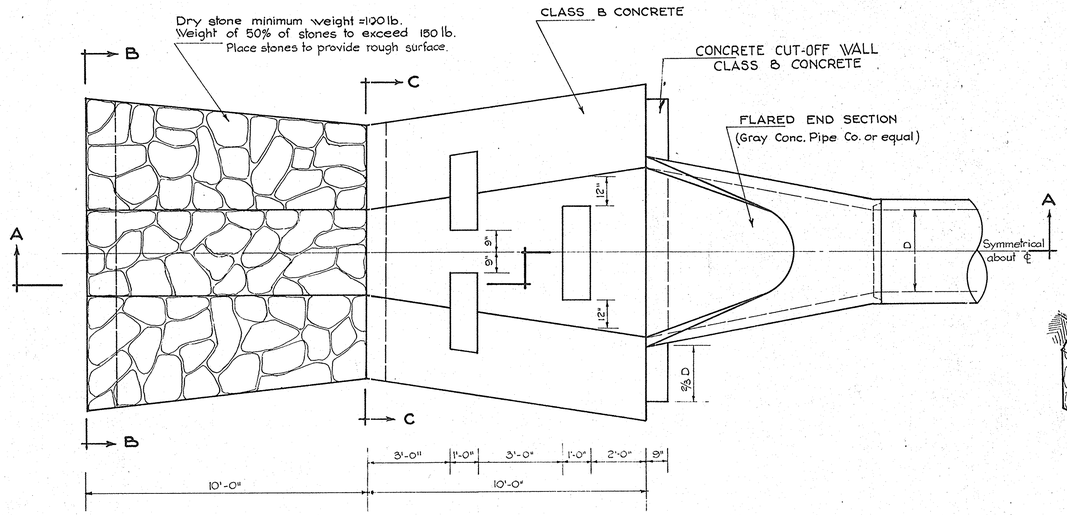

PLAN

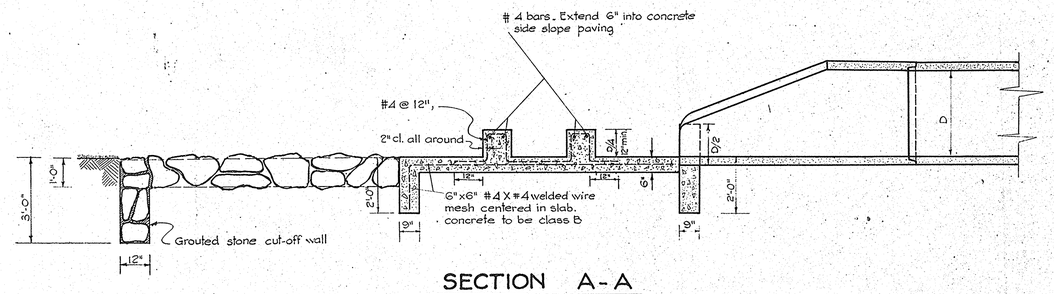

SECTION A-A

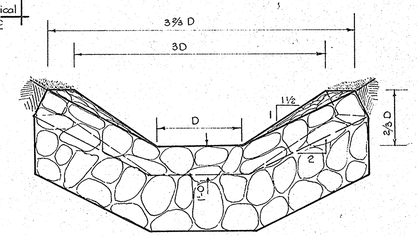

VIEW B-B

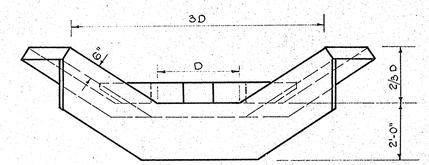

VIEW C-C

VELOCITY CHECK WITH DRY RIP-RAP _ PIPES 27" THRU 72"

No Scale

SD #D-35, 64173-Y
WASHINGTON SUBURBAN SANITARY COMMISSION
APPROVED July 31, 1964
FOR CONSTRUCTION
John A. Mayr
SENIOR DESIGNING ENGINEER
STRUCTURE 141

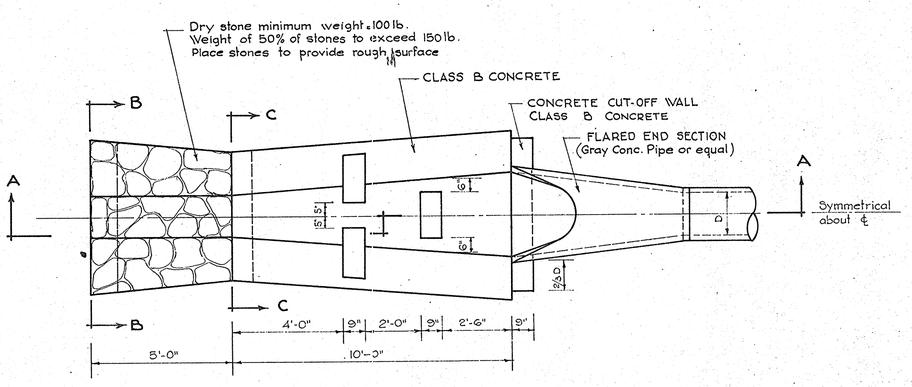

PLAN

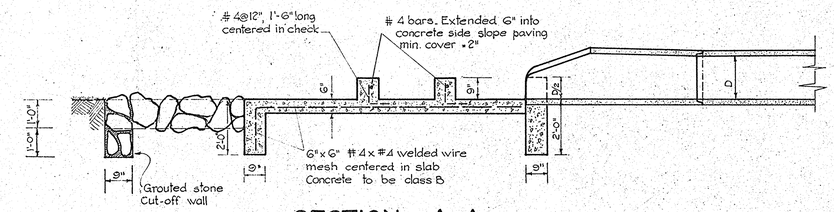

SECTION A-A

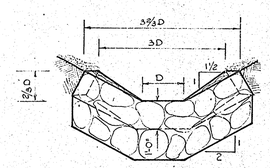

VIEW B-B

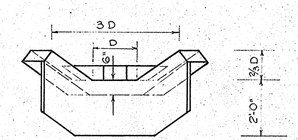

VIEW C-C

VELOCITY CHECK WITH DRY RIP-RAP _ PIPES 15" THRU 24"

No Scale

860

Alden E. Snow Jr.

Date	Revision				
		Drafting:	Regency Estates Associates	Civil Engineers ■ Land Planners ■ Land Surveyors	Paving and Storm Drain Plan
		Check:	14000 Layhill Road	Thomas G. Oyster and Associates Inc.	Deborah Drive, Redbud Court
		Design:	Silver Spring, Maryland	2419 Reedie Drive ■ Wheaton ■ Maryland ■ 949-2011	REGENCY ESTATES
		Check:			Montgomery County, Maryland

Date	Job No.
May, 1964	1290-E-2
Scale	Sheet No.
~	2 of 2

CE 487-845-2

SD FILE NO. 860