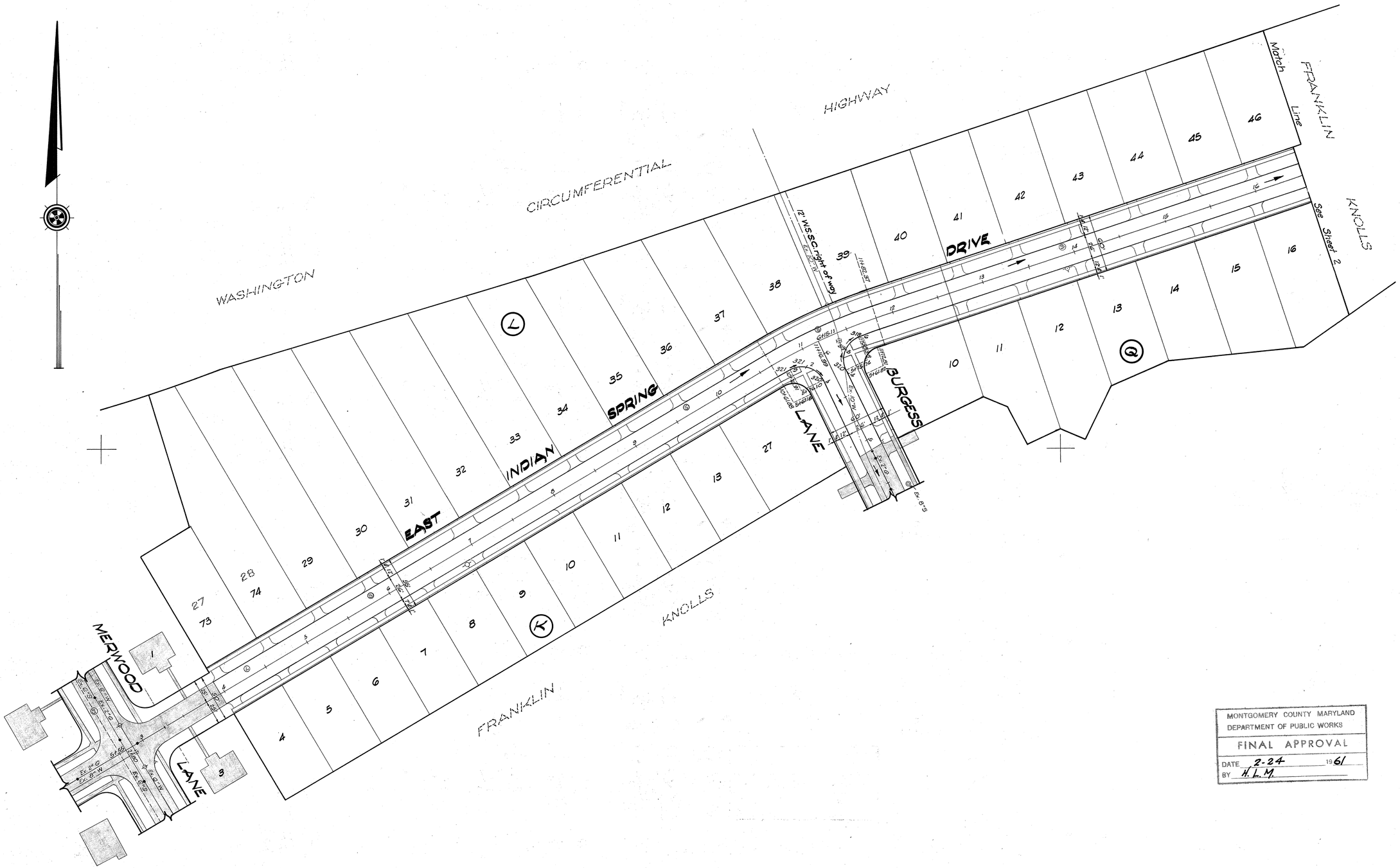

MONTGOMERY COUNTY MARYLAND
DEPARTMENT OF PUBLIC WORKS
FINAL APPROVAL
DATE 2-24 1961
BY H.L.M.

Date	Revision
11/14/60	No Gas or poles

Drafting D.H.
Check J.V.
Design D.H.
Check J.V.

Thomas G. Oyster & Associates, Inc.
Engineers & Surveyors
Wheaton, Maryland

SOUTH DECATUR, INC.
2915 Ellicott Street N.W.
Washington, D.C.

FRANKLIN KNOLLS
Montgomery County, Maryland
PAVING & STORM DRAINS

Scale	Date	Sheet	Job No.
1" = 50'	August, 1960	1 of 5	G-2-1542-E-2

CE487-598-1

SD FILE NO. 606

To WSSC — Nov 14, 1960

GENERAL NOTES

FOR STORM DRAIN CONSTRUCTION

1. All storm drains shall be constructed in accordance with the General Specifications of the Washington Suburban Sanitary Commission, adopted September 30, 1954.
2. Types of structures refer to the Washington Suburban Sanitary Commission's Standard Storm Drainage Details unless otherwise noted.
3. Information concerning underground utilities was obtained from available records, but the Contractor must determine the exact location and elevation of the mains by digging test pits by hand at all utility crossings well in advance of trenching. If clearances are less than shown on this plan or six (6) inches, whichever is less, contact the Storm Drain Section of the Washington Suburban Sanitary Commission before proceeding with construction.
4. All inlets are to be placed 3' off curb fillets unless otherwise shown.

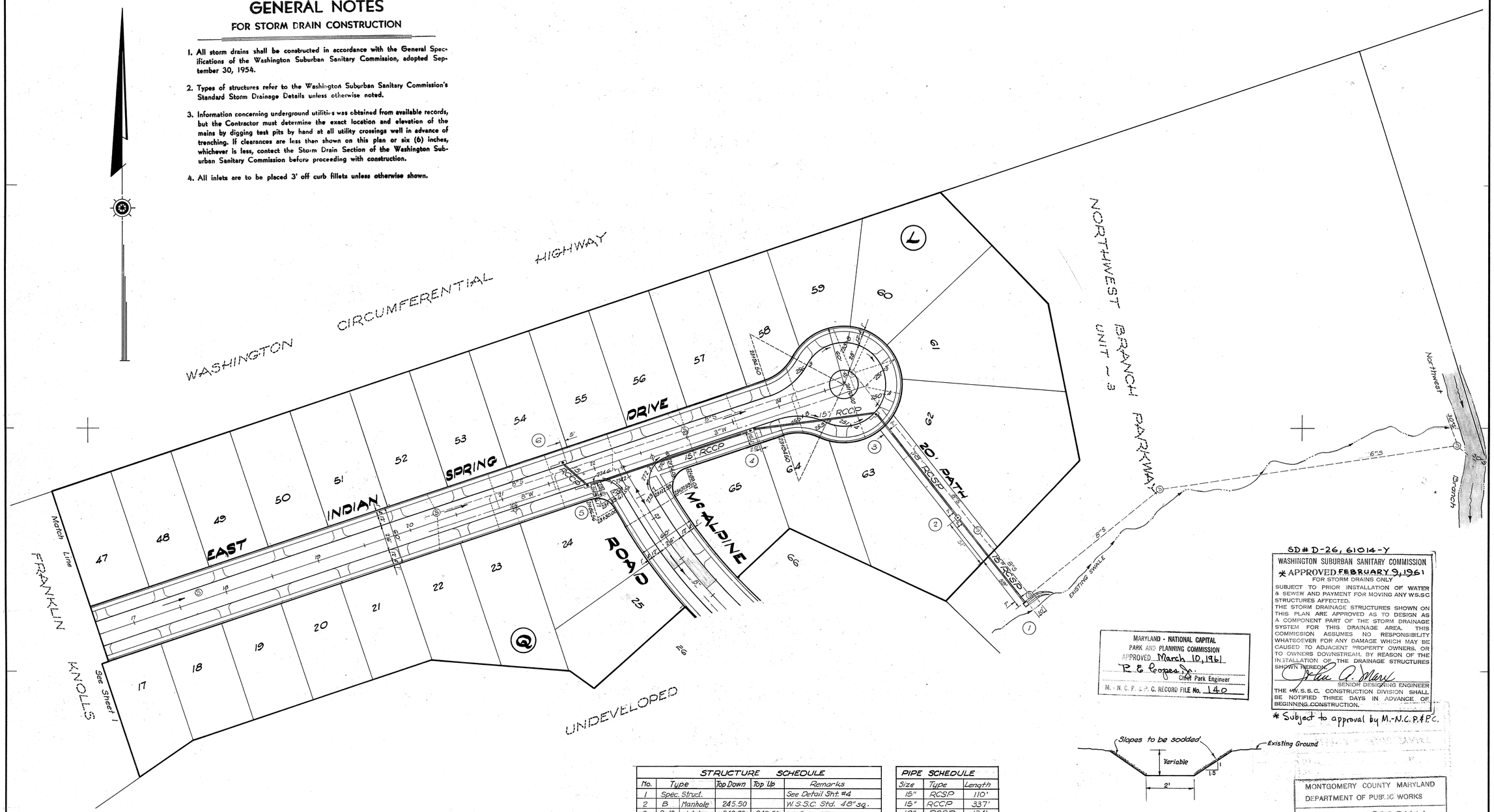

STRUCTURE SCHEDULE					
No.	Type		Top Down	Top Up	Remarks
1	Spec. Struct.				See Detail Sht. #4
2	B	Manhole	245.50		W.S.S.C. Std. 48" sq.
3	B-10	Inlet	249.90	249.90	" "
4	A-5	Inlet	261.48	262.16	" "
5	B-15	Inlet	274.63	275.02	" "
6	B-15	Inlet	275.05	275.28	" "

PIPE SCHEDULE		
Size	Type	Length
15"	RCSP	110'
15"	RCCP	337'
18"	RCSP	134'

TYPICAL DITCH SECTION

No Scale

SD # D-26, 61014-Y

WASHINGTON SUBURBAN SANITARY COMMISSION

* APPROVED FEBRUARY 9, 1961

FOR STORM DRAINS ONLY

SUBJECT TO PRIOR INSTALLATION OF WATER & SEWER AND PAYMENT FOR MOVING ANY W.S.S.C STRUCTURES AFFECTED.

THE STORM DRAINAGE STRUCTURES SHOWN ON THIS PLAN ARE APPROVED AS TO DESIGN AS A COMPONENT PART OF THE STORM DRAINAGE SYSTEM FOR THIS DRAINAGE AREA. THIS COMMISSION ASSUMES NO RESPONSIBILITY WHATSOEVER FOR ANY DAMAGE WHICH MAY BE CAUSED TO ADJACENT PROPERTY OWNERS, OR TO OWNERS DOWNSTREAM, BY REASON OF THE INSTALLATION OF THE DRAINAGE STRUCTURES SHOWN HEREON.

John A. Mary
SENIOR DESIGNING ENGINEER

THE W.S.S.C. CONSTRUCTION DIVISION SHALL BE NOTIFIED THREE DAYS IN ADVANCE OF BEGINNING CONSTRUCTION.

* Subject to approval by M.-N.C.P.&P.C.

MARYLAND - NATIONAL CAPITAL PARK AND PLANNING COMMISSION

APPROVED March 10, 1961

R. E. Cooper Jr.
Chief Park Engineer

M.-N.C.P.&P.C. RECORD FILE No. 140

MONTGOMERY COUNTY MARYLAND
DEPARTMENT OF PUBLIC WORKS

* FINAL APPROVAL

DATE 2.24 1961

BY H. L. M.

*Subject to approval and permit by M-NCP&PC

DATE	REVISION
11/14/60	No Gas or poles
5/24/61	location structure #1
5/21/61	Extended Mc Alpine

Drafting
Check
Design
Check

Thomas G. Oyster & Associates, Inc.
Engineers & Surveyors
Wheaton, Maryland

SOUTH DECATUR, INC.
2915 Ellicott Street N.W.
Washington, D.C.

FRANKLIN KNOLLS

Montgomery County, Maryland

PAVING & STORM DRAINS

SCALE	DATE	SHEET	JOB No.
1"=50"	August, 1960	2 of 5	G-2-1542-E-5

CE 487-598-2

SD FILE NO. 606 -007

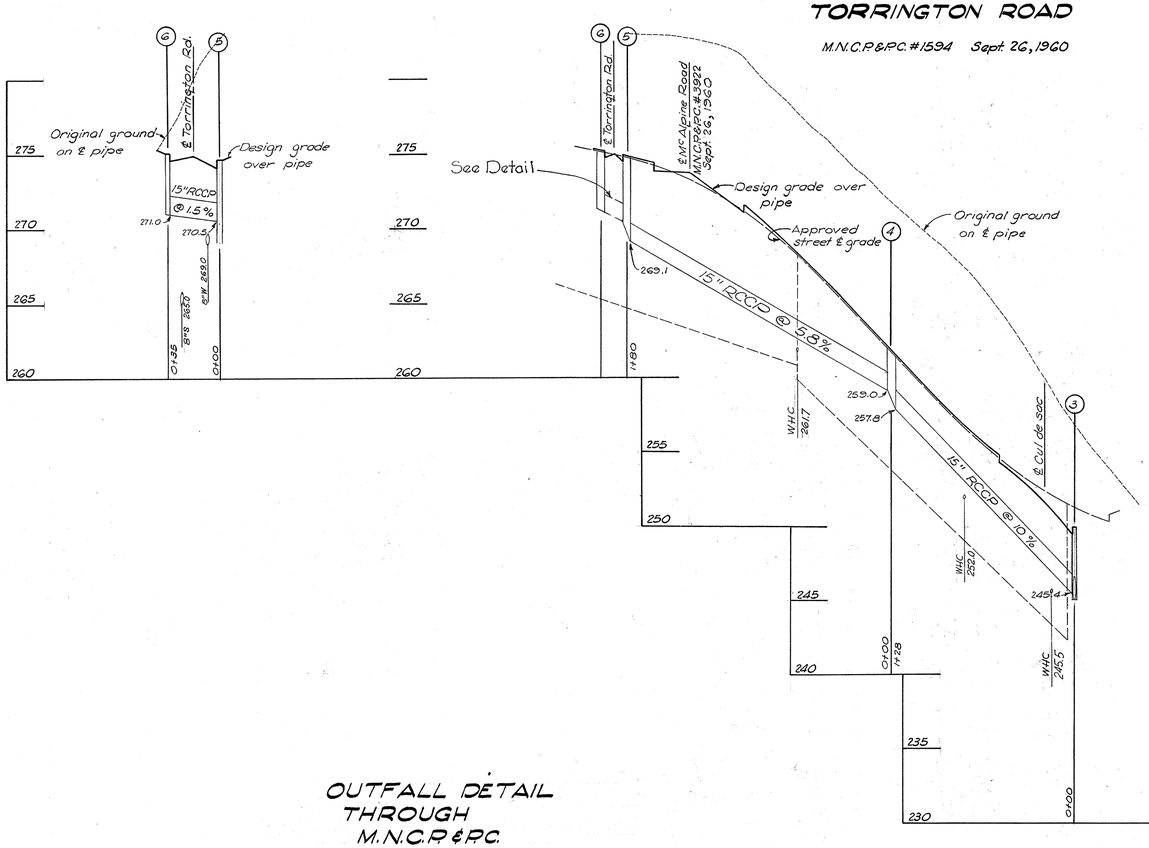

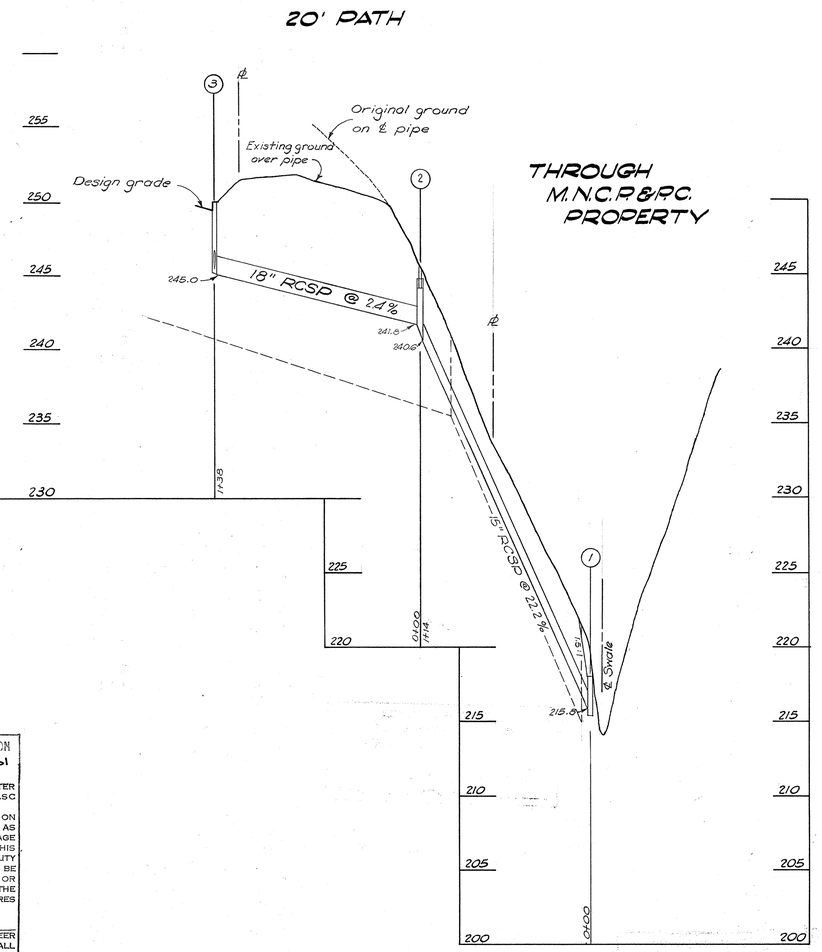

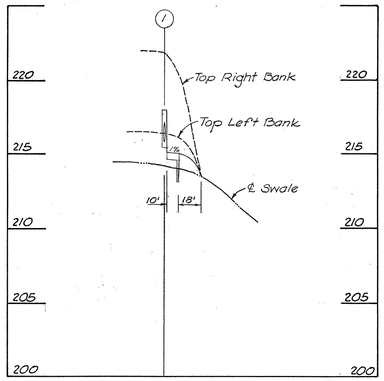

SD # D-26, 61014-Y

WASHINGTON SUBURBAN SANITARY COMMISSION
APPROVED FEBRUARY 9, 1961
FOR STORM DRAINS ONLY
SUBJECT TO PRIOR INSTALLATION OF WATER & SEWER AND PAYMENT FOR MOVING ANY W.S.S.C STRUCTURES AFFECTED.
THE STORM DRAINAGE STRUCTURES SHOWN ON THIS PLAN ARE APPROVED AS TO DESIGN AS A COMPONENT PART OF THE STORM DRAINAGE SYSTEM FOR THIS DRAINAGE AREA. THIS COMMISSION ASSUMES NO RESPONSIBILITY WHATSOEVER FOR ANY DAMAGE WHICH MAY BE CAUSED TO ADJACENT PROPERTY OWNERS, OR TO OWNERS DOWNSTREAM, BY REASON OF THE INSTALLATION OF THE DRAINAGE STRUCTURES SHOWN HEREON.
SENIOR DESIGNING ENGINEER
THE W.S.S.C. CONSTRUCTION DIVISION SHALL BE NOTIFIED THREE DAYS IN ADVANCE OF BEGINNING CONSTRUCTION.

MARYLAND - NATIONAL CAPITAL PARK AND PLANNING COMMISSION
APPROVED March 10, 1961
T. E. Cooper Jr.
Chief Park Engineer
M.-N.C.P.&P.C. RECORD FILE No. 140

MONTGOMERY COUNTY MARYLAND
DEPARTMENT OF PUBLIC WORKS
FINAL APPROVAL
DATE 2-24 1961
BY H.L.M.

Date	Revision						
		Drafting	Thomas G. Oyster & Associates, Inc. Engineers & Surveyors Wheaton, Maryland	SOUTH DECATUR, INC. 2915 Ellicott Street N.W. Washington, D.C.	FRANKLIN KNOLLS Montgomery County, Maryland PAVING & STORM DRAINS	Scale Horz. 1"=50' Vert. 1"=5'	Date August, 1960
		Check					Sheet 3 of 5
		Design					Job No. G-2-1542-E-5
		Check					

CE487-598-3

SD FILE NO. 606

-007

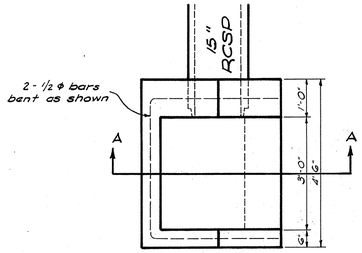

PLAN VIEW

CONSTRUCTION NOTES

1. All concrete to be W.S.S.C. Class B.
2. All welded wire mesh joints to be lapped 6" and securely tied.
3. Chamfer all exposed edges 3/4" by 3/4"

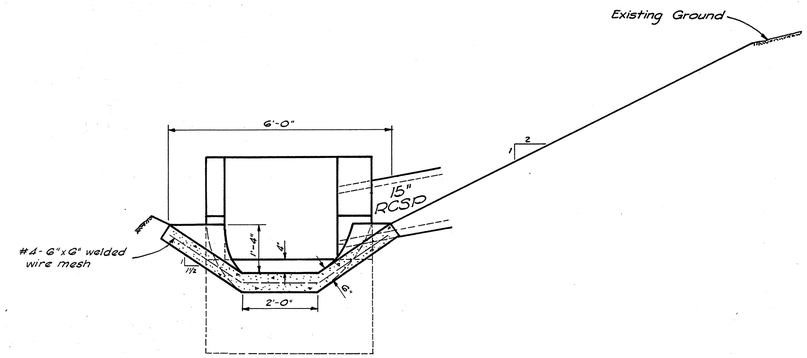

SECTION B-B

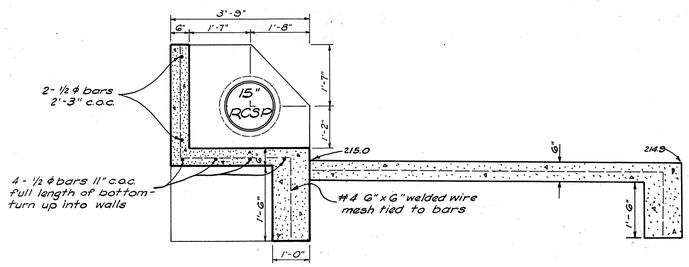

SECTION A-A

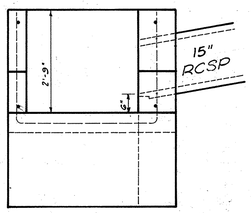

FRONT VIEW

OUTFALL BOX

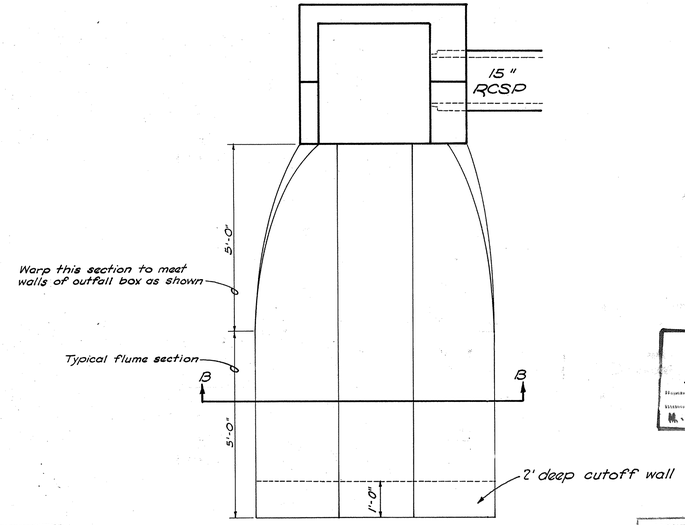

PLAN VIEW

FLUME DETAIL

SD # D-26, 61014-Y
WASHINGTON SUBURBAN SANITARY COMMISSION
APPROVED FEBRUARY 9, 1961
FOR STORM DRAINS ONLY
John C. Mary
SENIOR DESIGNING ENGINEER

MARYLAND - NATIONAL CAPITAL
PARK AND PLANNING COMMISSION
APPROVED March 10, 1961
R E Copes Jr.
CHIEF PARK ENGINEER
M.-N.C.P.&P.C. RECORD FILE No. 140

MONTGOMERY COUNTY MARYLAND
DEPARTMENT OF PUBLIC WORKS
FINAL APPROVAL
DATE 2.24 1961
BY H.L.M.

STRUCTURE # 1

DATE	REVISION							
		Drafting PH Check J² & A.E.I. Design J² Check A.E.I.	Thomas G. Oyster & Associates, Inc. Engineers & Surveyors Wheaton, Maryland	SOUTH DECATUR, INC. 2915 Ellicott St. N.W. Washington, D.C.	FRANKLIN KNOLLS MONTGOMERY COUNTY, MARYLAND PAVING & STORM DRAINS	SCALE 1/2"=1'-0"	DATE August, 1960	SHEET 4 OF 5	JOB No. G-2-1542-E-5

CE 487-598-4

SD FILE NO. 606

P-1-007