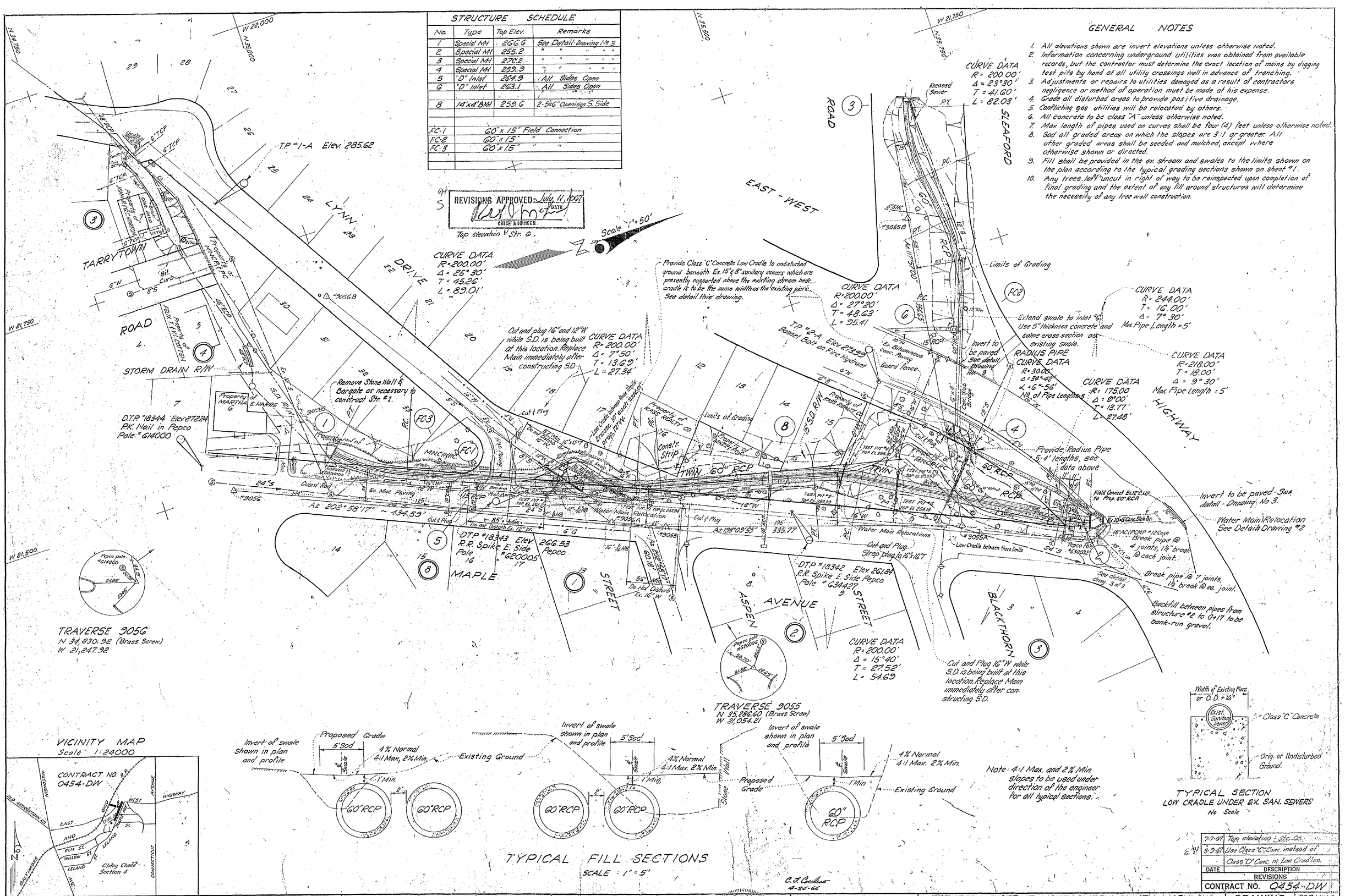

STRUCTURE SCHEDULE

No.	Type	Top Elev.	Remarks
1	Special MH	266.6	See Detail Drawing No 3
2	Special MH	255.2	" " " " "
3	Special MH	270.2	" " " " "
4	Special MH	259.9	" " " " "
5	"D" Inlet	264.9	All Sides Open
6	"D" Inlet	263.1	All Sides Open
8	14'x4' BMH	259.6	2-5'x6" Openings S. Side
FC-1	60" x 15" Field Connection		
FC-2	60" x 15" " "		
FC-3	60" x 15" " "		

REVISIONS APPROVED: July 11, 1967
DATE
CHIEF ENGINEER

GENERAL NOTES

1. All elevations shown are invert elevations unless otherwise noted.
2. Information concerning underground utilities was obtained from available records, but the contractor must determine the exact location of mains by digging test pits by hand at all utility crossings well in advance of trenching.
3. Adjustments or repairs to utilities damaged as a result of contractors negligence or method of operation must be made at his expense.
4. Grade all disturbed areas to provide positive drainage.
5. Conflicting gas utilities will be relocated by others.
6. All concrete to be class "A" unless otherwise noted.
7. Max length of pipes used on curves shall be four (4) feet unless otherwise noted.
8. Sod all graded areas on which the slopes are 3:1 or greater. All other graded areas shall be seeded and mulched, except where otherwise shown or directed.
9. Fill shall be provided in the ex. stream and swales to the limits shown on the plan according to the typical grading sections shown on sheet #1.
10. Any trees left uncut in right of way to be reinspected upon completion of final grading and the extent of any fill around structures will determine the necessity of any tree well construction.

VICINITY MAP
Scale 1:24000

TYPICAL FILL SECTIONS
SCALE : 1" = 5'

Note: 4:1 Max. and 2% Min. slopes to be used under direction of the engineer for all typical sections.

TYPICAL SECTION
LOW CRADLE UNDER EX. SAN. SEWERS
No Scale

C. J. Coelho 4-25-66

DATE	DESCRIPTION
7-7-67	Top elevation - Str. 6.
3-9-67	Use Class "C" Conc. instead of Class "D" Conc. in Low Cradles.

REVISIONS

CONTRACT NO. 0454-DW

DRAWN	WASHINGTON SUBURBAN SANITARY COMMISSION	APPROVED February 28, 1967 DATE CHIEF ENGINEER	STORM DRAINAGE AUTHOR Oct. 5, 1965 JOB NO. 65 DW 3542	SUPERVISION FOR MAIN LINES ONLY Required BY DEPT. OF STATE FORESTS & PARKS BALTIMORE, MD.	EXAMINED FOR WATER & SEWER 2/16/67; R/W REQ'D 1/26/67; OTHER UTILITIES
TRACED					
CHECKED 2/26/67					
EXAMINED					
STARTED					

CONTRACT No. 0454-DW

BETHESDA DISTRICT, MONTGOMERY COUNTY, MARYLAND
STORM DRAINAGE
MAPLE AVE., SLEAFORD RD., & S.E. of LYNN DR. to MAPLE AVE.
CHEVY CHASE

DRAWING NO. 1 OF 3

209NW4
6524.73
Y
18 NW 8 & 9

D-65180

CE457-C91-1

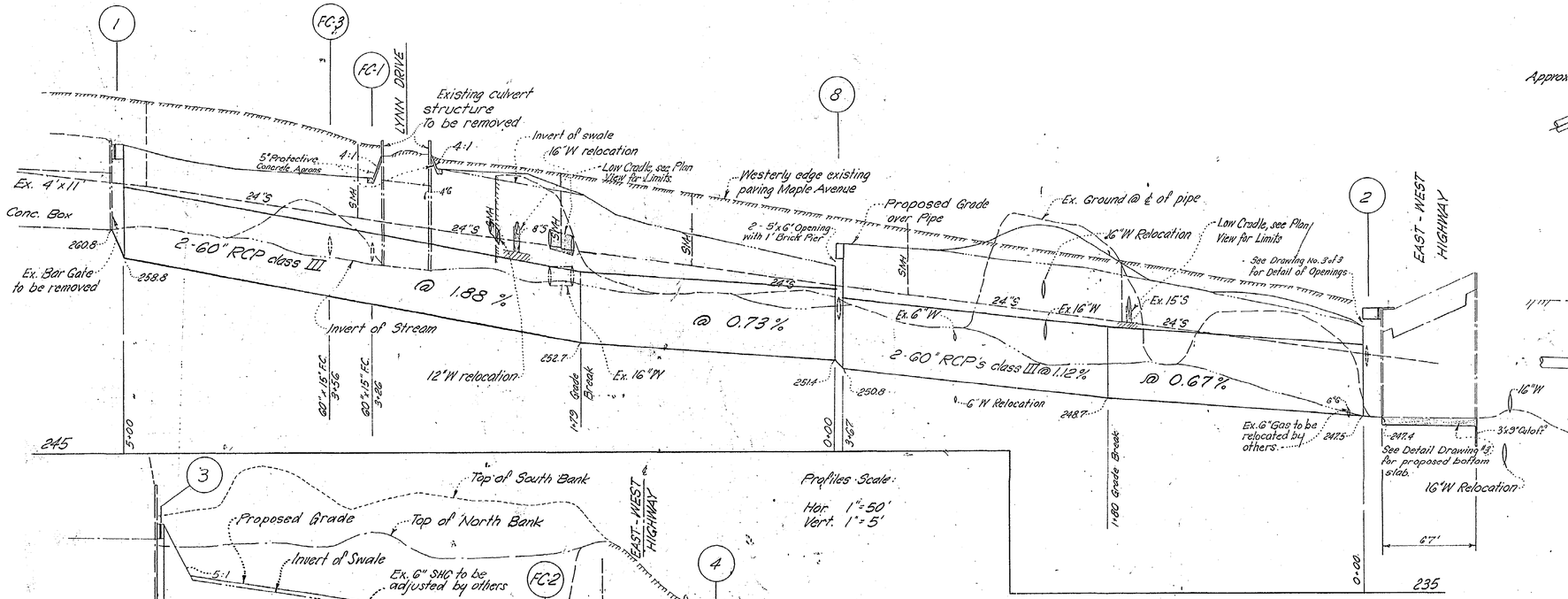

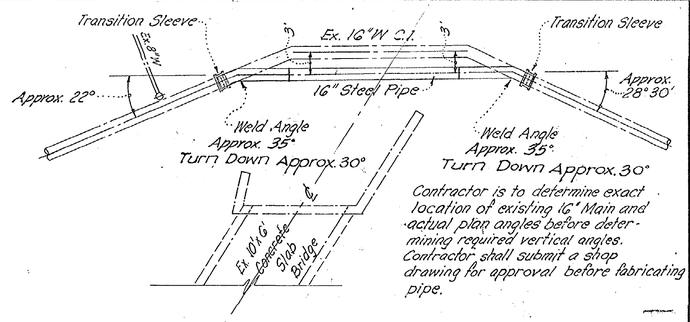

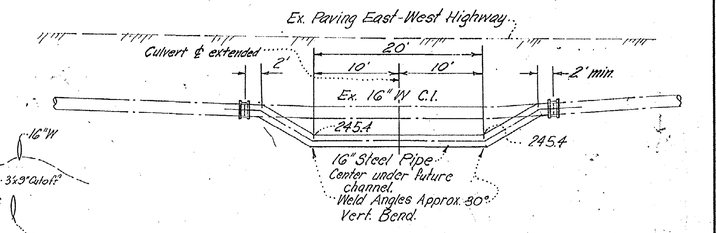

WATER MAIN RELOCATION BELOW EXISTING 10'x6' CONCRETE BRIDGE
Scale: 1"=10'

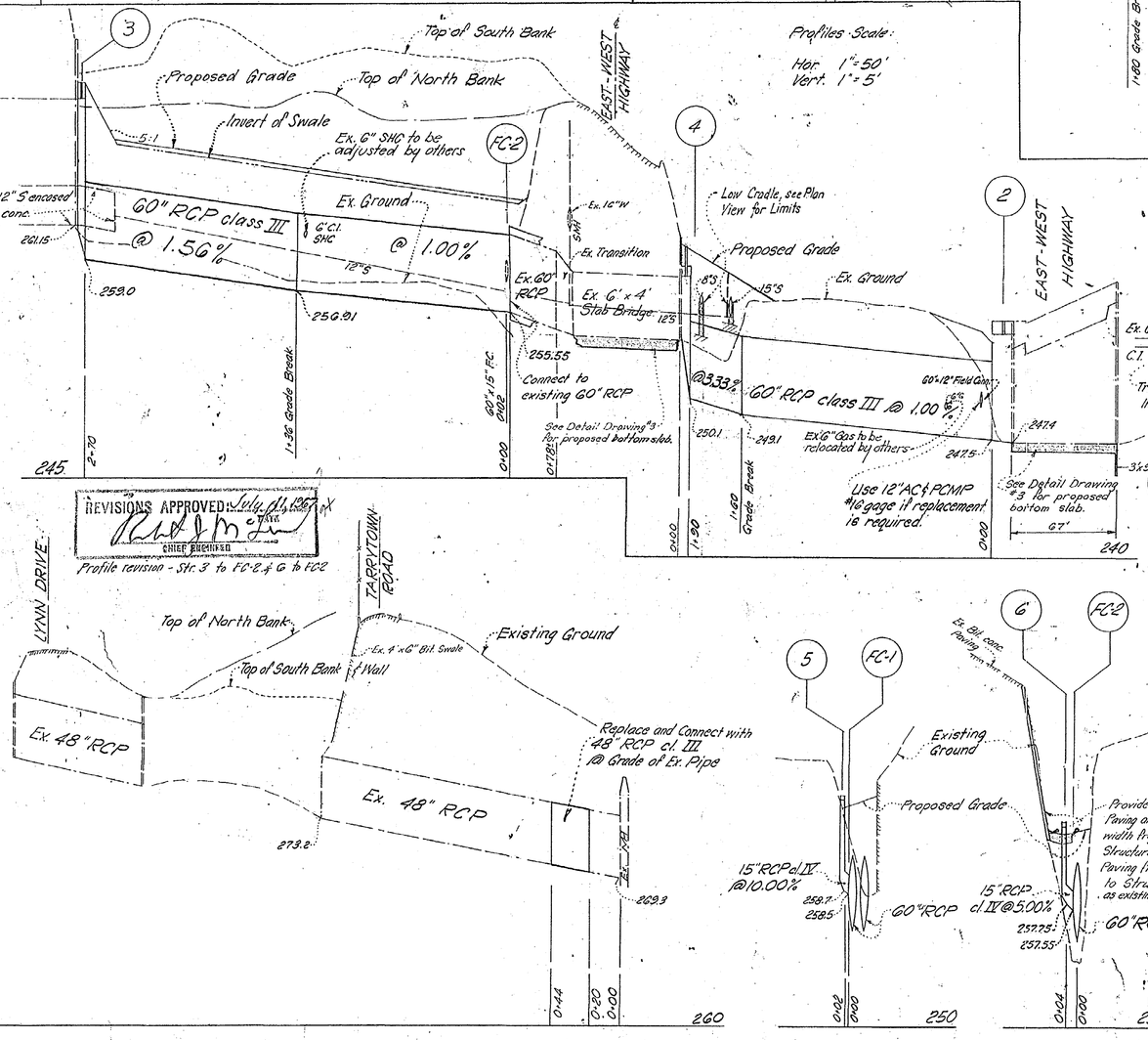

For details of welding and painting the steel pipe See Std. detail G5E239-L.
6" Steel pipe to be G⅜" O.D. ⅛" Thick.
12" C.I.P. to be Class 22.
16" Steel pipe to be ¼" Thick.
16" C.I.P. to be Class 24.
Use Concrete to block 16" and 12" fittings.
See Std Detail 46715-L.

DATE	DESCRIPTION
7-7-67	Profile revision - Sh. 3 to FC-2 & G to FC2

REVISIONS

C.J. Cochran 4-25-66

DRAWN	WASHINGTON SUBURBAN SANITARY COMMISSION	APPROVED February 28, 1967 DATE CHIEF ENGINEER	Storm Drainage AUTHOR	SUPERVISION FOR MAIN LINES ONLY BY DEPT. OF STATE FORESTS & PARKS BALTIMORE, MD.	EXAMINED FOR	CONTRACT No. 0454-DW	BETHESDA DISTRICT, MONTGOMERY COUNTY, MARYLAND
TRACED			Oct 5, 1965		WATER / SEWER		STORM DRAINAGE
CHECKED C.J.C.			JOB NO.		R/W REQ'D		MAPLE AVE., S.L.E. AFORD RD., E.S.E. of LYNN DR. to MAPLE AVE. CHEVY CHASE
EXAMINED			65DW3542		OTHER UTILITIES		
STARTED							

DRAWING NO. 2 OF 3 — 200NW4, 652474, Y, 18NW2-B14

CONTRACT No. 0454-DW

CE 487-291-2.

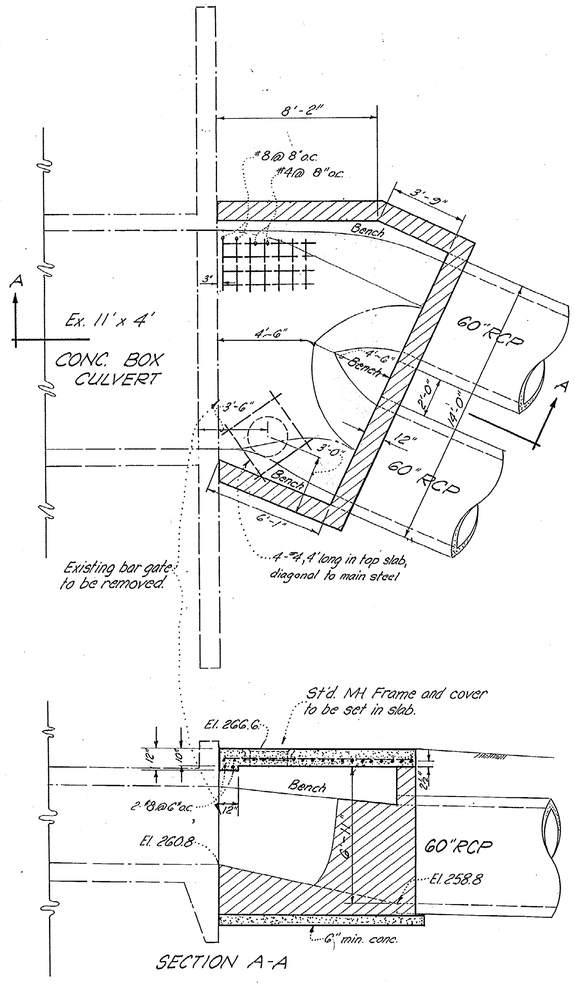

SECTION A-A

STRUCTURE No. 1

Scale: 1/4"=1'-0"

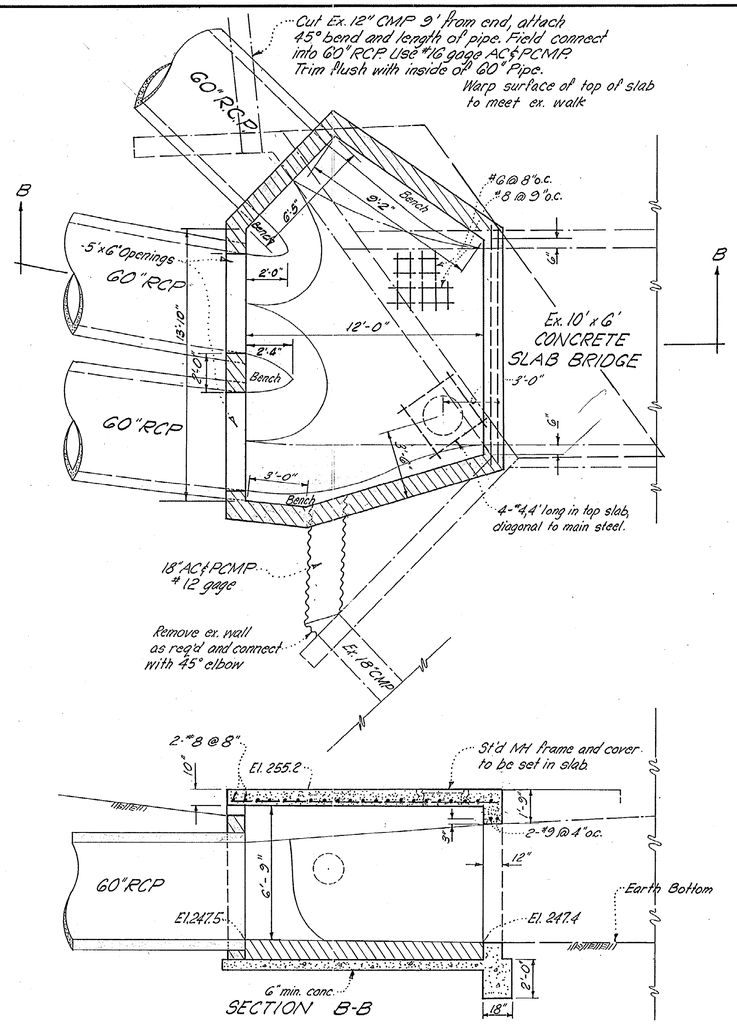

SECTION B-B

STRUCTURE No. 2

Scale: 1/4"=1'-0"

NOTES:

1. For details of M.H.'s not shown see W.S.S.C. St'd. Detail # 561217-L.
2. Remove existing concrete walls as necessary to build structure to dimensions shown.
3. Chamfer all exposed edges 1"x1".
4. Maintain 2" clearance minimum on all reinforcing steel to outside of concrete.

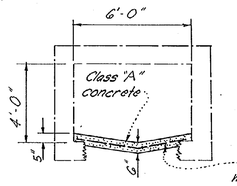

SECTION OF BOTTOM SLAB FOR EXISTING 6'x4' CONCRETE SLAB BRIDGE Scale: 1/4"=1'-0"

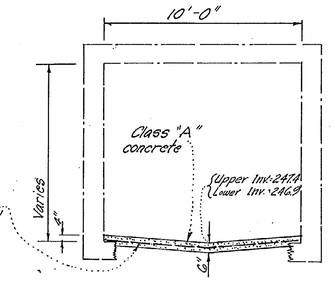

SECTION OF BOTTOM SLAB FOR EXISTING 10'x6' CONCRETE SLAB BRIDGE Scale: 1/4"=1'-0"

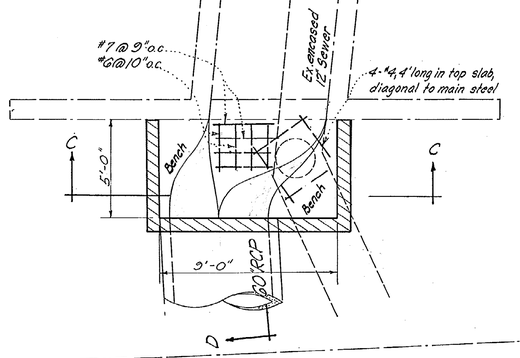

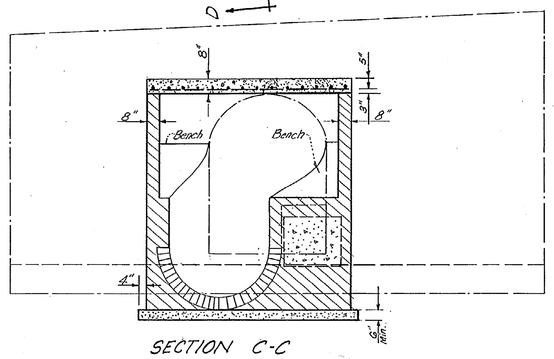

SECTION C-C

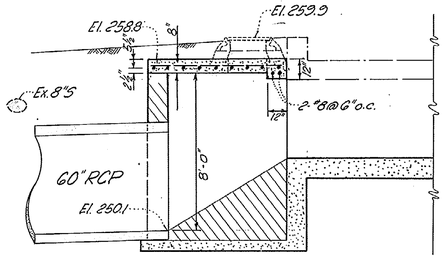

SECTION E-E

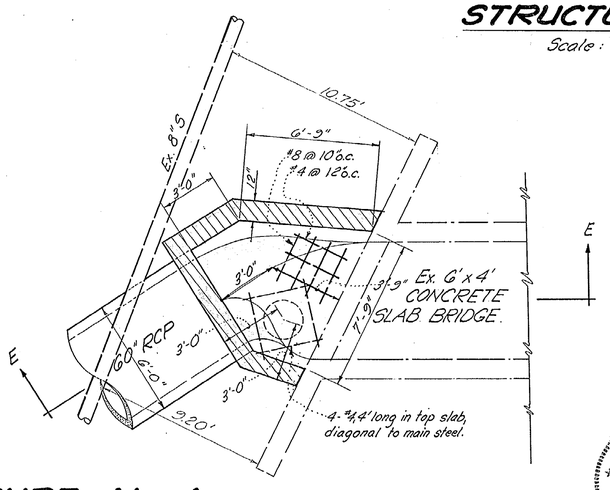

STRUCTURE No. 4

Scale: 1/4"=1'-0"

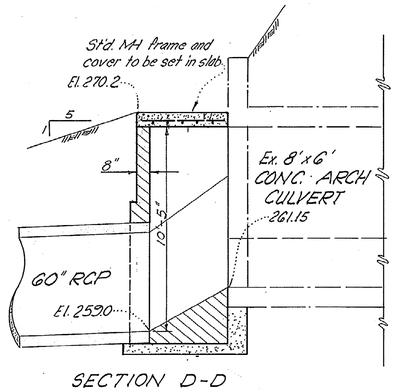

SECTION D-D

STRUCTURE No. 3

Scale: 1/4"=1'-0"

STATE OF MARYLAND — REGISTERED PROFESSIONAL ENGINEER — 5718
C.J. Carlson 4-25-66

CE487-291-3

SD FILE NO. 293

DATE	DESCRIPTION
	REVISIONS
CONTRACT NO.	0454-DW

DRAWN	
TRACED	
CHECKED	
EXAMINED	
STARTED	

WASHINGTON SUBURBAN SANITARY COMMISSION

APPROVED February 28, 1967 DATE
CHIEF ENGINEER

Storm Drainage	
AUTHOR	
Oct. 5, 1965	
JOB NO.	
65 DW 3542	

SUPERVISION FOR MAIN LINES ONLY BY DEPT. OF STATE FORESTS & PARKS BALTIMORE, MD.

EXAMINED FOR		
Water & SEWER		
R/W REQ'D		
OTHER UTILITIES		

BEN DYER ASSOCIATES, INC. — ENGINEERS, SURVEYORS, PLANNERS — TELEPHONE 770-8500

CONTRACT No. 0454-DW

BETHESDA DISTRICT, MONTGOMERY COUNTY, MARYLAND

STORM DRAINAGE

MAPLE AVE., SLEAFORD RD., & S.S.E. of LYNN DR. to MAPLE AVE. CHEVY CHASE

DRAWING NO. 3 OF 3

209NW4
652475
Y
18 NW 3-1
18 NW 4-144

Maryland State Archives