CURVE #4 ℄ DATA
R= 720.00'
Δ = 13°30'00"
T= 85.22'
L.=169.55'
L.C.=169.25'

CURVE #3 ℄ DATA
R= 720.00'
Δ=09°00'00"
T=56.67'
L= 113.10'
L.C.=112.98'

CURVE #2 ℄ DATA
R=100.00'
Δ=49°30'00"
T= 46.10'
L= 86.39'
L.C.= 83.74'

CURVE #1 ℄ DATA
R=160.00'
Δ= 25°00'00"
T= 35.47'
L= 69.81'
L.C.=69.26'

Provide 50'± transition in channel side-slope and channel invert to meet existing conditions

B.M. #2 Elev.=370.98
R.R. Spike in pole #M2637

B.M. #3 Elev.=377.27
Top of Iron Pipe Property Corner

NOTE:
No Right of Way was obtained from the property of Menacker, Lot 4, Block 4. Extreme care must be taken during construction not to go onto this property.

CURVE #5 ℄ DATA
R= 720.00'
Δ= 01°54'36"
T= 12.00'
L= 24.00'
L.C.=24.00'

REVISIONS APPROVED: June 29, 1967
CHIEF ENGINEER
Addition of Str. #19 & connecting pipe.

Grade area to provide positive drainage to slot in North side of Structure No. 11. For details of slot, see sheet 5 of 5

Construction Strip

Provide 15' transition in side slopes, from 1.5:1 side slope to a 3:1 side slopes

Fill existing swale to provide positive drainage to Structure No. 15

Grade area to provide positive drainage to Structure No. 15

Grade area to provide positive drainage to Structure No. 13

Limit of grading, see Typical Section sheet 5 of 5

Provide grouted rip-rap over Ex. 36" Water, for details see sheet 5 of 5.

Grade existing stream to provide positive drainage to proposed channel as directed by the Engineer, and sod and/or seed & mulch all disturbed slope areas.

Grade existing area to provide positive drainage to proposed channel or as directed by the Engineer and sod all disturbed areas.

29' WSSC Std. grouted rip-rap South side slope of channel, for details see Typical Grading Section sheet 5 of 5.

For details of mod. endwall and WSSC Std. Concrete Paving with velocity checks, see sheet 4A of 5

Brick shut ends of Ex. 42" CMP or remove as directed by the Engineer.

Remove and relay existing SHC at a minimum 2.0% slope or as directed by the Engineer, to provide a minimum of 3" clearance. SHC to be encased 10' each side of ℄

Limit of grading, see Typical Grading Section sheet 5 of 5

Do not disturb fence. Grade around fence a directed by the Engineer.

WILLIAM W. NAIRN, JR.

WILLIAM W. NAIRN, 3RD

VENTURA AVENUE

LINCOLN · MENACKER · HETTICH · COOL CREEK DEVELOPMENT CO. · ROSENBLITT · SWAIM · M.N.C.P.&P.C. · JAMES D. DRAPER · MIGIARO · LELLINGER · JAMES D. DRAPER

CHANNING ROAD · LADD STREET · BLUERIDGE AVENUE

14' Right of Way for a Storm Drain
15' Right of Way for a Storm Drain
16' Right of Way for a Storm Drain
18' Right of Way for a Storm Drain
20' Right of Way for a Storm Drain
26' Right of Way for a Storm Drain
35' Right of Way for a Storm Drain
15' Right of Way for a Storm Drain

Right of Way for a Storm Drain

See Section Line "A" Sheet 2 of 5

EDWARDS & RENICK CONSTRUCTION CO.

63"x98" RCP · 58"x91" RCP · 15" RCP · 36" RCP · 42" CMP · 36" RCP Stub & Guy Wires · 36" RCP Stub up @ 0.50% · 3-42" CMP · Bituminous Walk

CURVE #1 P.I. · CURVE #2 P.I. · CURVE #3 P.I. · CURVE #4 P.I. · CURVE #5 P.I.

B.M. #1 — Cut Nail and Washer in 10" Oak — Elev.=372.95

5' Construction Strip

PLAN
Scale: 1"=50'

STRUCTURE SCHEDULE

No.	TYPE	TOP ELEV.	REMARKS
1	B-Manhole	380.61	WSSC Mod., See Details Sheet 2 of 5
2	B-Manhole	389.30	" " " " " "
3	30"x(53"x83") Field Connection		" Std.
4	B-Manhole	388.10	" " 48" Sq.
5	15"x(53"x83") Field Connection		" "
6	D-Inlet	381.13	" " *
7	B-Manhole	381.07	" Mod., See Details Sheet 2 of 5 †
8	B-Manhole	381.57	" " " " " "
~~9~~	~~15"x(53"x83") Field Connection~~		~~" Std.~~
~~10~~	~~Cut off Wall~~	~~—~~	~~" " 15" Diam.~~
11	B-Manhole	377.40	" Mod. (9'-0"x 5'-0") ††
12	15"x(58"x91") Field Connection		" Std.
13	D-Inlet	373.43	" " **
14	15"x(58"x91") Field Connection		" "
15	D-Inlet	370.73	" " ***
16	15"x(58"x91") Field Connection		" "
17	D-Inlet	368.63	" " ****
18	Mod. Std. Endwall & Paved Outfall Channel		See Details Sheet 4 of 5
19	D-Inlet	—	WSSC Std. *****
20	15"x(58"x91") Field Connection		" "

* Provide std. slots in North, West & East Face of Inlet @ inv. 379.90
** " " " " all sides of Inlet @ inv. 372.60
*** " " " " " " " " @ " 369.90
**** " " " " " " " " @ " 367.80
† 6'-0"x 0'-6" slot in Southwest side of Manhole @ inv. 379.90
†† " 5'-0" x 0'-6" " with a lintel in Northeast side of Manhole @ inv. 375.00. For details of lintel, see sheet 5 of 5.
***** Provide std. slots in NW, NE & SE sides of Inlet. Set top elevation to best provide positive drainage to slots as directed by the engineer.

GENERAL NOTES

1. All elevations, unless otherwise shown, are invert elevations.
2. Information concerning underground utilities, was obtained from available records, but the Contractor must determine the exact location of the mains by digging test pits by hand at all utility crossings well in advance of excavation.
3. Existing utilities which conflict with proposed work will be moved by others, except as noted.
4. Adjustment or repair to utilities damaged as a result of the Contractor's negligence or method of operation must be made at his own expense.
5. Sod all filled areas in which the slope is greater than 3:1. All other filled areas shall be seeded and mulched, unless otherwise specified or directed.
6. All Elliptical Pipe used shall be manufactured in accordance with A.S.T.M. Designation C-507-63T.
7. Provide 4" sand bed below all Elliptical Pipe and extend up to spring line. Sand to be used for backfill beneath the pipe shall have the same gradation as specified in the concrete section of the General Specifications for fine aggregates.
8. Maximum length of pipe to be laid on curves to be 6'-0".
9. All existing drainage structures to be removed as necessary for new construction.
10. Fill shall be provided in the existing stream to the limits shown on the plan according to the Typical Grading Sections on sheet 5 of 5 and shall be placed in such a manner to provide positive drainage.
11. Sewer House Connections not shown in Block "4" are out of the North side of the house.
12. Any trees left uncut in right of way to be reinspected upon completion of final grading and the extent of any fill around structures will determine the necessity of any tree well construction.
13. No trees to be left standing within 5'-0" from the edge of the trench to side of tree

REVISIONS APPROVED: 10-21-1966
CHIEF ENGINEER
Change in location of endwall, Structure # 18.

REVISIONS APPROVED: 5-23-67
CHIEF ENGINEER
Relocation & redesign of Str. # 18.

REVISIONS
10/21/66 Change in location of endwall, Structure # 18.
5/23/67 Relocation & redesign of Str. # 18.
6/29/67 Addition of Str. 19 & connecting pipe.

VICINITY MAP
Scale: 1"=2000'

CHECKED
EXAMINED

WASHINGTON SUBURBAN SANITARY COMMISSION

APPROVED September 29, 1966
DATE
ASSISTANT CHIEF ENGINEER

STORM DRAINS
AUTHOR. 3-11-65
JOB NO. G5DE3068

SUPERVISION FOR MAIN LINES ONLY REQUIRED BY DEPT. OF STATE FORESTS & PARKS BALTIMORE, MD.

EXAMINED FOR
WATER & SEWER — 11/7/66
R/W REQ'D. — 11/9/66
OTHER UTILITIES — 11/8/66

GREENHORNE & O'MARA
ENGINEERS
6715 KENILWORTH AVENUE
RIVERDALE, MARYLAND

CONTRACT No. 0412 DE

CE487-281-1

SD FILE NO. 282

WHEATON DISTRICT
STORM DRAINS
STREAM SOUTHWEST OF VENTURA AVENUE
WHEATON VIEW

DRAWING NO. 1 OF 5

SCALE 1"=50'

No. 0412DE

614 NW2
615 NW2
651904
Y
28NW3-1, 28NW4-2 & 29NW4-4

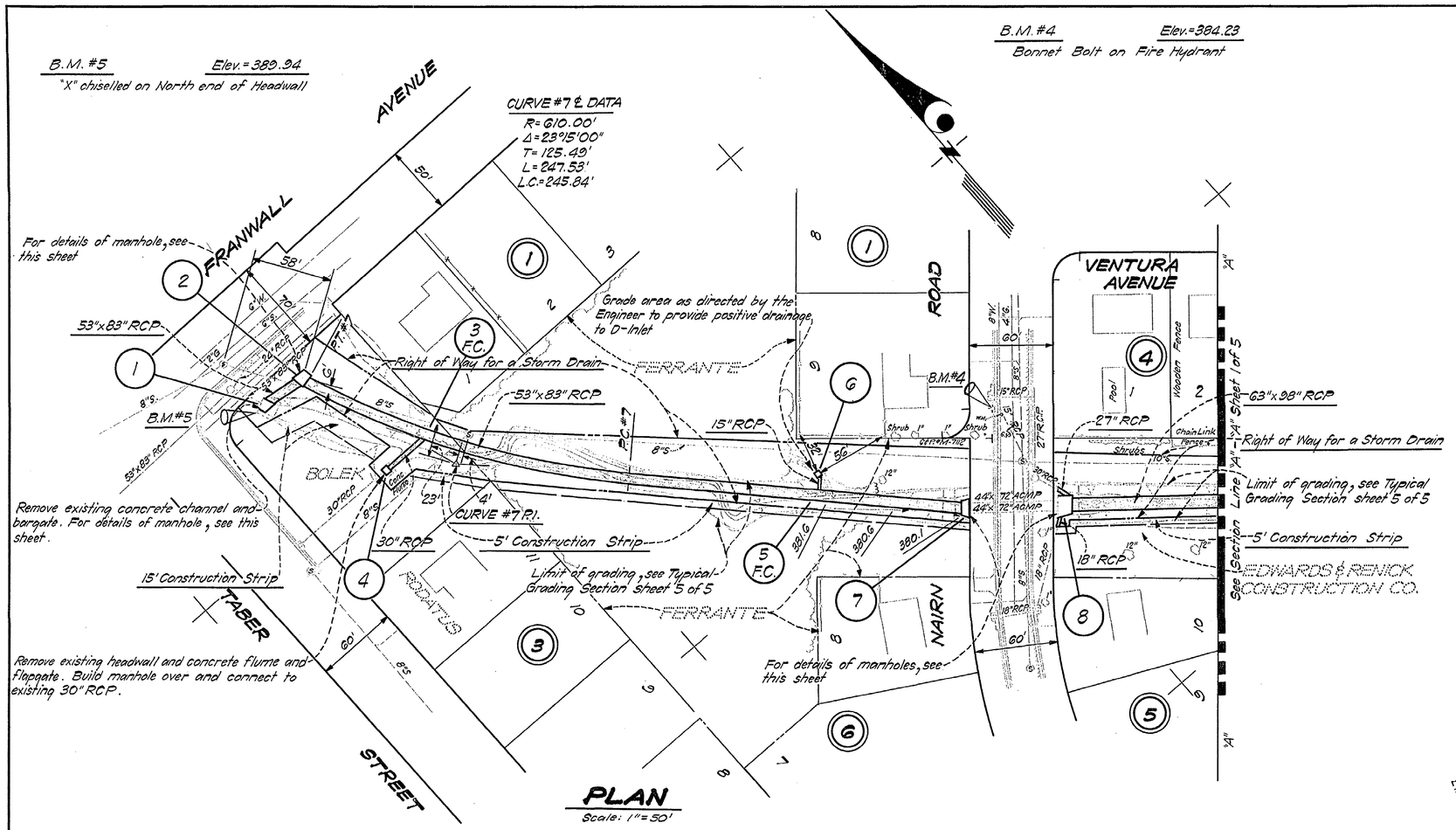

PLAN

Scale: 1" = 50'

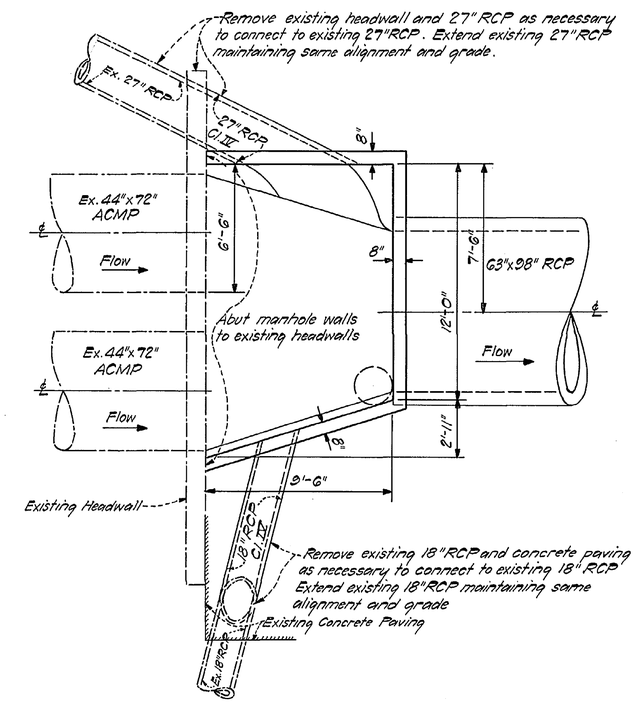

STRUCTURE Nº 8

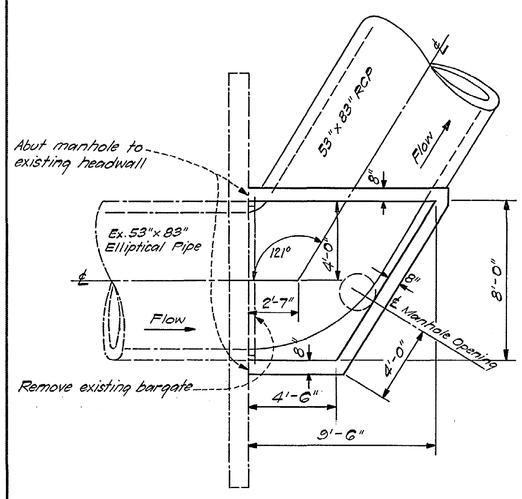

STRUCTURE Nº 1

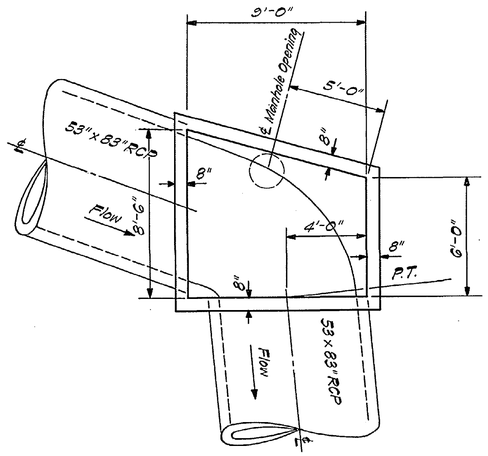

STRUCTURE Nº 2

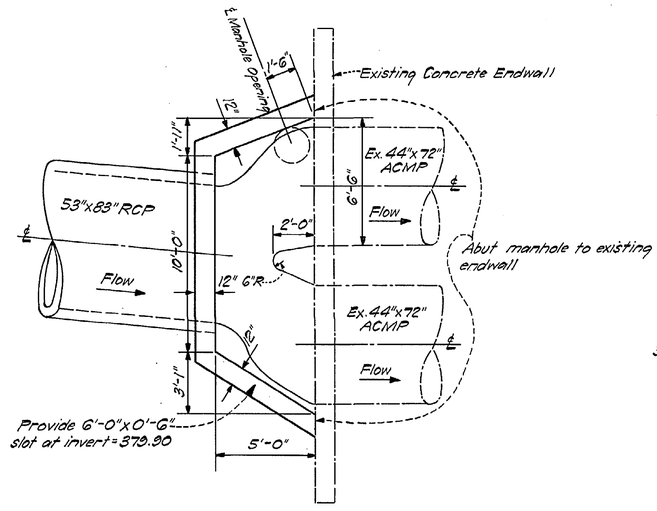

STRUCTURE Nº 7

STRUCTURE NOTES

1. All manholes to have WSSC Std. Manhole Slabs, for details see Std. Detail Nº 5G1217-L.
2. Structures Nº 1 and Nº 2; manhole frame and cover to be set on top of slab all other manhole frame and covers to be cast into slab.
3. Structures Nº 1, 7 and Nº 8, manhole slabs to bear directly on the existing headwalls.

MODIFIED B-MANHOLE DETAILS

Scale: 1/4" = 1'-0"

CE487-281-2

SD FILE NO. 282

Nº 0412DE

CHECKED									
EXAMINED									
WASHINGTON SUBURBAN SANITARY COMMISSION	APPROVED September 20, 1966 DATE — ASSISTANT CHIEF ENGINEER	STORM DRAINS AUTHOR. 3-11-65 JOB NO. 65DE3068	SUPERVISION FOR MAIN LINES ONLY REQUIRED BY DEPT. OF STATE FORESTS & PARKS BALTIMORE, MD.	EXAMINED FOR: WATER & SEWER, R/W REQ'D., OTHER UTILITIES	GREENHORNE & O'MARA ENGINEERS 6715 KENILWORTH AVENUE RIVERDALE, MARYLAND	CONTRACT Nº 0412DE	WHEATON DISTRICT STORM DRAINS STREAM SOUTHWEST OF VENTURA AVENUE WHEATON VIEW	DRAWING NO. 2 OF 5	SCALE As Shown

215NW2
651905
Y
29NW4-4

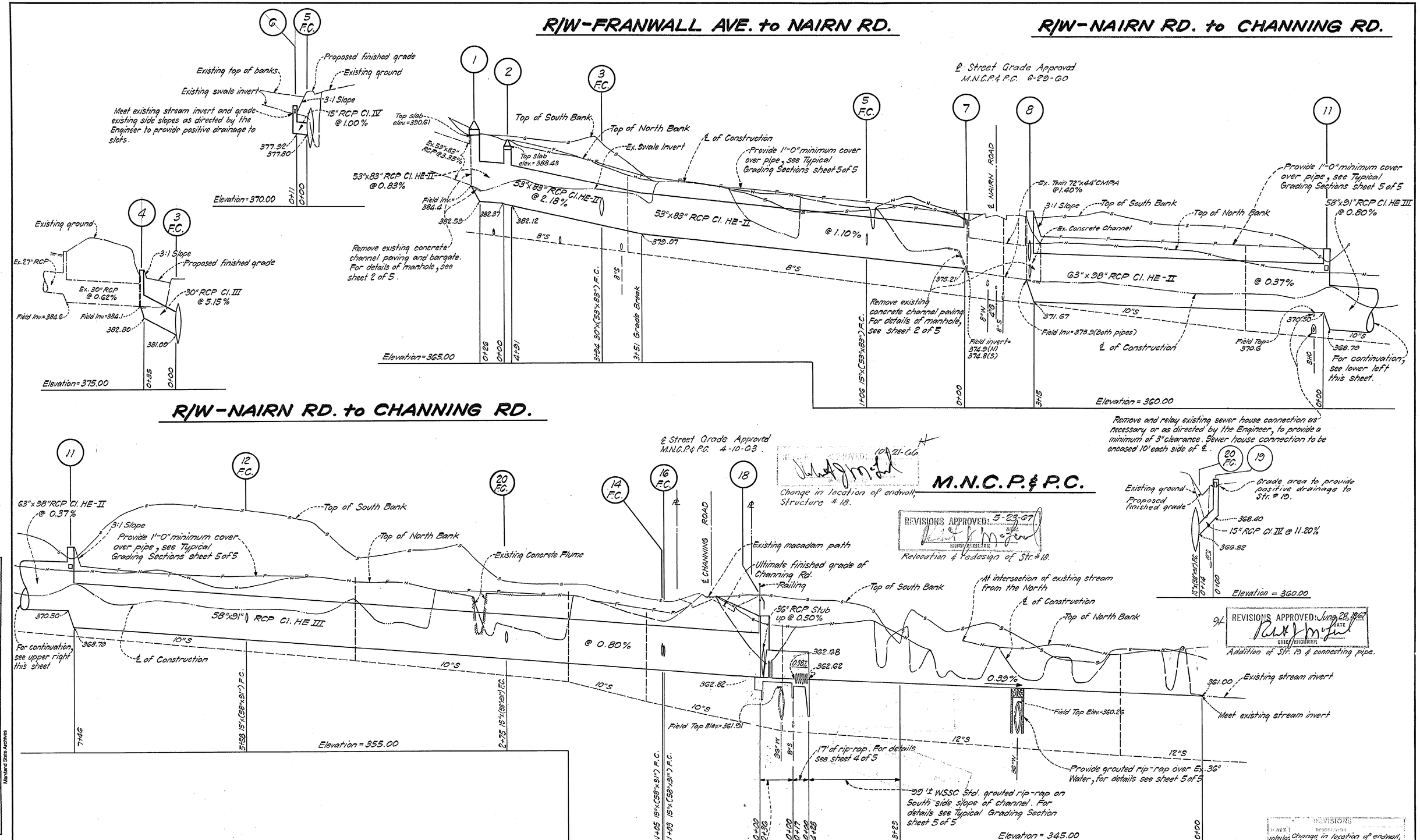
R/W-FRANWALL AVE. to NAIRN RD.
R/W-NAIRN RD. to CHANNING RD.
R/W-NAIRN RD. to CHANNING RD.
M.N.C.P.& P.C.
℄ Street Grade Approved M.N.C.P.& P.C. 6-29-60
℄ Street Grade Approved M.N.C.P.& P.C. 4-10-63
Existing top of banks
Existing swale invert
Proposed finished grade
Existing ground
3:1 Slope
15" RCP Cl. IV @ 1.00%
Meet existing stream invert and grade existing side slopes as directed by the Engineer to provide positive drainage to slots.
Elevation=370.00
Top slab elev.=390.61
Top of South Bank
Top of North Bank
Ex. Swale Invert
℄ of Construction
Provide 1'-0" minimum cover over pipe, see Typical Grading Sections sheet 5 of 5
53"x83" RCP Cl. HE-II @ 0.83%
53"x83" RCP Cl. HE-II @ 2.18%
53"x83" RCP Cl. HE-II @ 1.10%
Remove existing concrete channel paving and bargate. For details of manhole, see sheet 2 of 5.
Elevation=365.00
Ex. Twin 72"x44" CMPA @ 1.40%
Ex. Concrete Channel
63"x98" RCP Cl. HE-II @ 0.37%
58"x91" RCP Cl. HE III @ 0.80%
Field Inv.=373.9 (Both pipes)
Field Top=370.6
For continuation, see lower left this sheet.
Elevation=360.00
Remove and relay existing sewer house connection as necessary or as directed by the Engineer, to provide a minimum of 3" clearance. Sewer house connection to be encased 10' each side of ℄.
Grade area to provide positive drainage to Str. # 19.
15" RCP Cl. IV @ 11.20%
Elevation=360.00
Existing ground
Proposed finished grade
Ex. 27" RCP
Ex. 30" RCP @ 0.62%
30" RCP Cl. III @ 5.15%
Field Inv.=384.6
Field Inv.=384.1
Elevation=375.00
63"x98" RCP Cl. HE-II @ 0.37%
Top of South Bank
Top of North Bank
Existing Concrete Flume
Existing macadam path
Ultimate finished grade of Channing Rd.
Railing
36" RCP Stub up @ 0.50%
58"x91" RCP Cl. HE III @ 0.80%
For continuation, see upper right this sheet
℄ of Construction
At intersection of existing stream from the North
Existing stream invert
Meet existing stream invert
Field Top Elev.=361.91
Field Top Elev.=360.26
17' of rip-rap. For details see sheet 4 of 5
Provide grouted rip-rap over Ex. 36" Water, for details see sheet 5 of 5
99'± WSSC Std. grouted rip-rap on South side slope of channel. For details see Typical Grading Section sheet 5 of 5
36' of WSSC Std. Concrete Paving with velocity checks @ 0.38%. For details of paving and mod. endwall see special detail sheet 4A of 5
Elevation=355.00
Elevation=345.00
Change in location of endwall, Structure # 18.
REVISIONS APPROVED: 5-23-67
Relocation & redesign of Str. # 18.
REVISIONS APPROVED: June 28, 1967
Addition of Str. 19 & connecting pipe.
REVISIONS
10/21/66 Change in location of endwall, Structure # 18.
5/22/67 Relocation & redesign of Str. # 18.
6/28/67 Addition of Str. 19 & connecting pipe.
CE487-281-3
SD FILE NO. 282
Nº 0412DE
CHECKED
EXAMINED
WASHINGTON SUBURBAN SANITARY COMMISSION
APPROVED September 29, 1966
STORM DRAINS
AUTHOR.
3-11-65
JOB NO.
65DE3068
SUPERVISION FOR MAIN LINES ONLY REQUIRED BY DEPT. OF STATE FORESTS & PARKS BALTIMORE, MD.
EXAMINED FOR
WATER & SEWER
R/W REQ'D.
OTHER UTILITIES
GREENHORNE & O'MARA ENGINEERS 6715 KENILWORTH AVENUE RIVERDALE, MARYLAND
CONTRACT Nº 0412DE
WHEATON DISTRICT
STORM DRAINS
STREAM SOUTHWEST OF VENTURA AVENUE WHEATON VIEW
DRAWING NO. 3 OF 5
SCALE Hor. 1"=50' Ver. 1"=5'
651906
Y

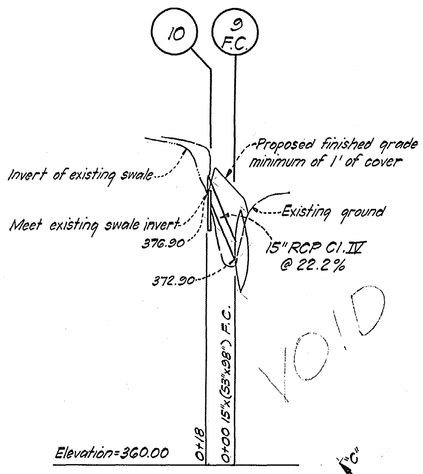

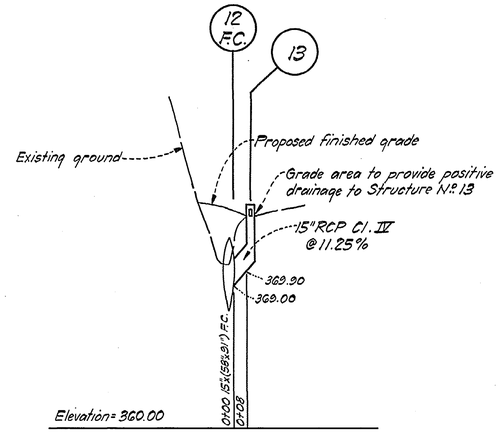

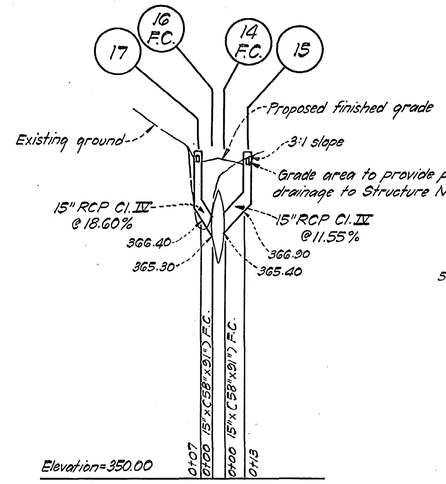

PROFILES

Scales: Hor. 1" = 50'
Ver. 1" = 5'

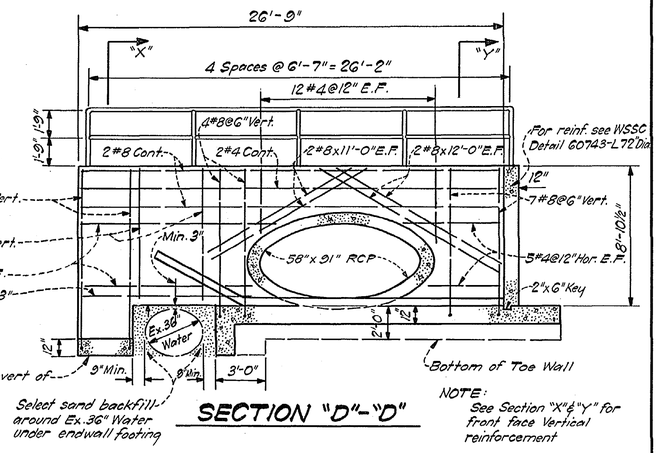

SECTION "D"-"D"

NOTE:
See Section "X" & "Y" for front face Vertical reinforcement

If a joint for the 36" Water Main is directly under the proposed endwall or channel paving, obtain necessary top elevations and contact the Storm Drain Section before constructing Structure # 18.

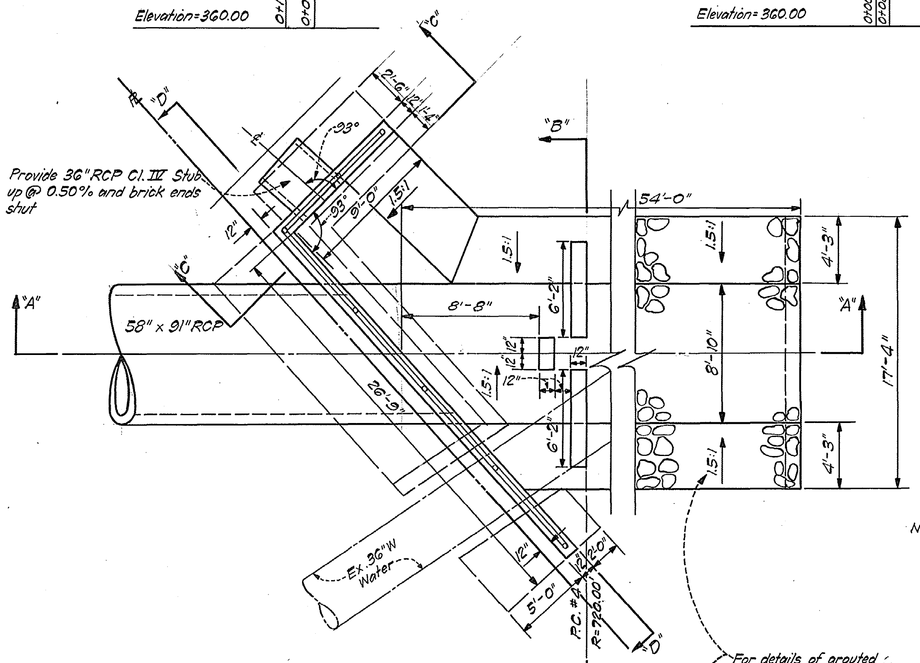

PLAN

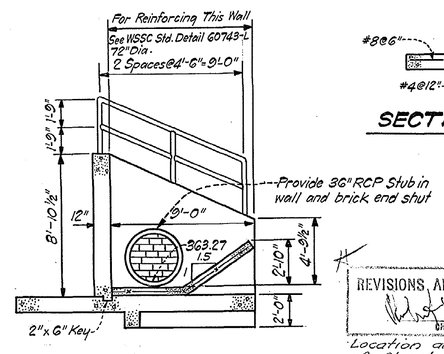

SECTION "C"-"C"

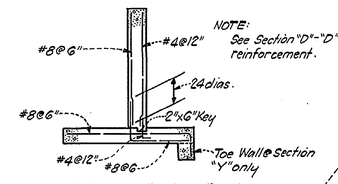

NOTE:
See Section "D"-"D" for Horizontal reinforcement.

SECTION "X" & "Y"

No Scale

REVISIONS APPROVED: 10-21-66
CHIEF ENGINEER

Location and modification of Structure # 18.

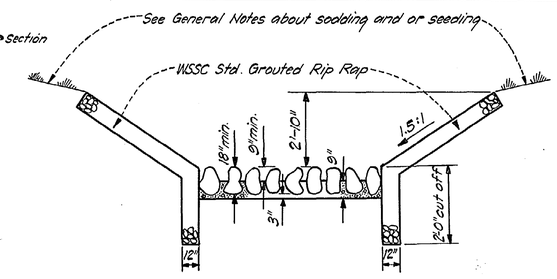

TYPICAL SECTION

NOTES:
1. For dimensions & reinforcement not shown, refer to WSSC Std. Detail No. 60743-L, 72" Dia.
2. The Contractor is to note that extreme care must be taken during construction in the vicinity of the existing 36" Water.

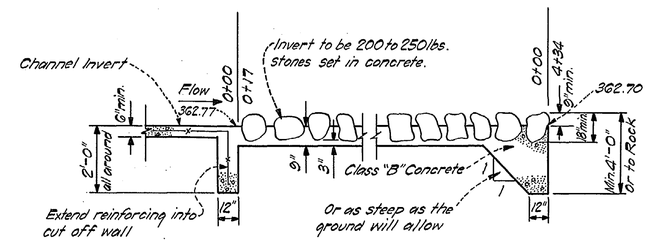

LONGITUDINAL SECTION

RIP RAP OUTFALL DETAILS

No Scale

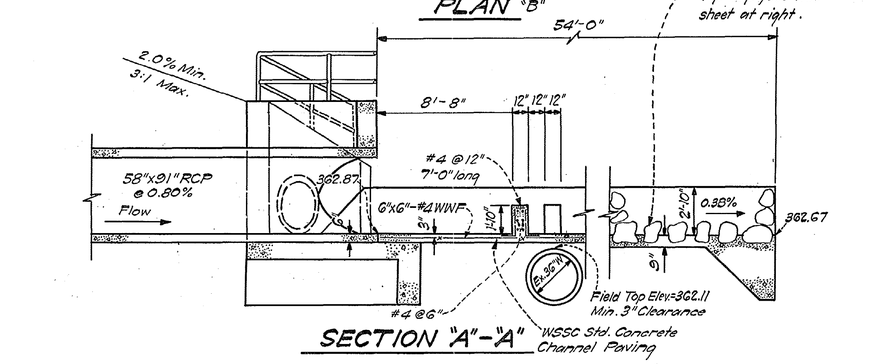

SECTION "A"-"A"

For details of grouted rip-rap, see this sheet at right.

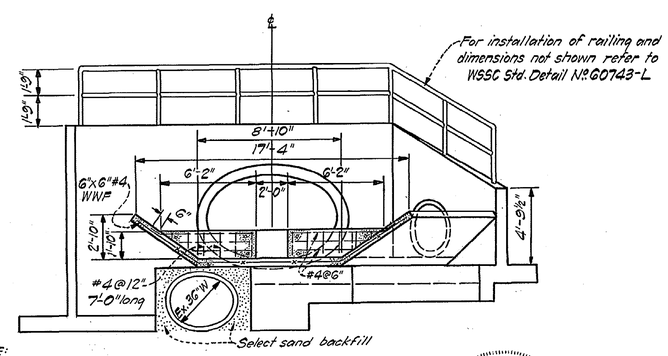

SECTION "B"-"B"

NOTE:
For details of stepped footing around Ex. 36" W, see Section "D"-"D"

SPECIAL STRUCTURE No. 18

Scale: 1" = 5'-0"

THIS SHEET SUPERSEDED BY SHEET 4A

10/21/66 Location and modification of Structure # 18.

SD FILE NO. 282

CHECKED									
EXAMINED									
WASHINGTON SUBURBAN SANITARY COMMISSION	APPROVED September 20, 1966 (DATE) John M. Foster, ASSISTANT CHIEF ENGINEER	STORM DRAINS AUTHOR. 3-11-65 JOB NO. 65DE3068	SUPERVISION FOR MAIN LINES ONLY REQUIRED BY DEPT. OF STATE FORESTS & PARKS BALTIMORE, MD.	EXAMINED FOR WATER & SEWER R/W REQ'D. OTHER UTILITIES	GREENHORNE & O'MARA ENGINEERS 6715 KENILWORTH AVENUE RIVERDALE, MARYLAND	CONTRACT No. 0412 DE	WHEATON DISTRICT STORM DRAINS STREAM SOUTHWEST OF VENTURA AVENUE WHEATON VIEW	DRAWING NO. 4 OF 5	SCALE As Shown
								No. 0412 DE	65/907 Y

CF 427-721-11

Maryland State Archives

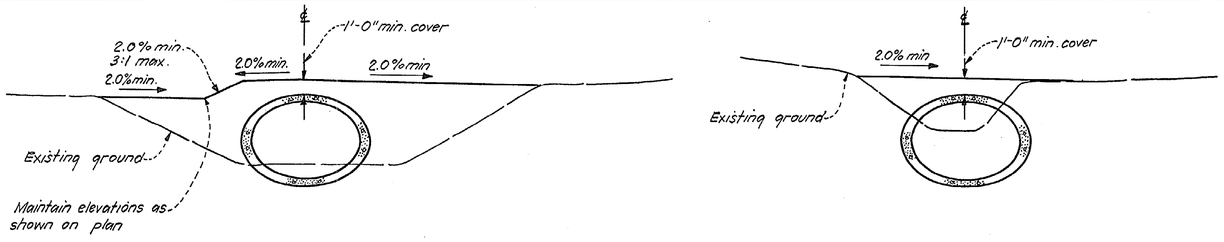

STRUCTURE No. 7 TO STRUCTURE No. 1

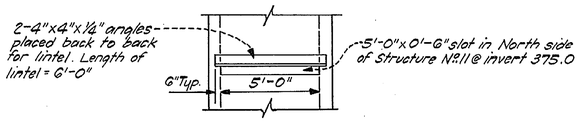

LINTEL DETAIL FOR STRUCTURE No. 11

No Scale

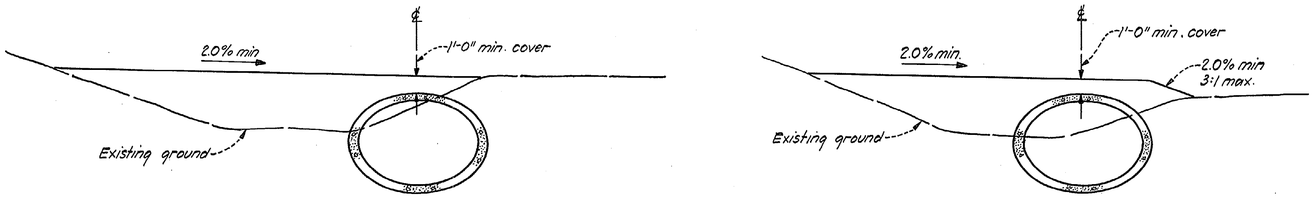

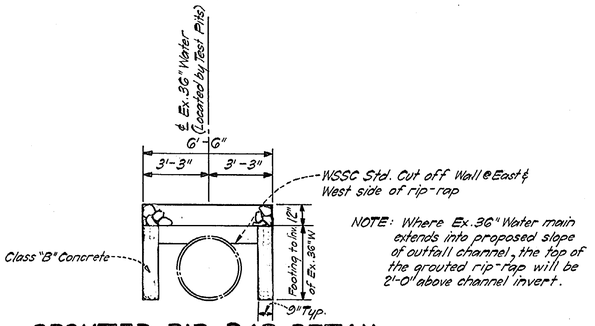

NOTE: Where Ex. 36" Water main extends into proposed slope of outfall channel, the top of the grouted rip-rap will be 2'-0" above channel invert.

GROUTED RIP-RAP DETAIL OVER EXISTING 36" WATER

Scale: 1/4" = 1'-0"

STRUCTURE No. 18 TO STRUCTURE No. 8

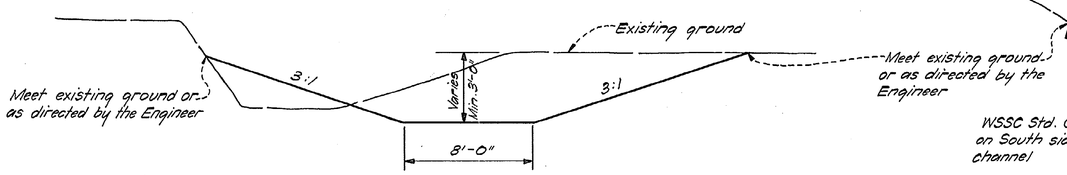

SECTION BETWEEN 0+00 & P.C. #3 (3+29)

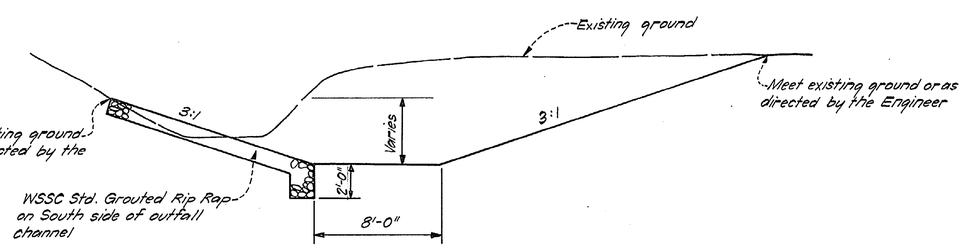

SECTION BETWEEN P.C. #3 (3+29) & 4+28

OUTFALL CHANNEL DITCH SECTIONS

NOTE:
In regards to sodding and or seeding, refer to the General Notes.

TYPICAL GRADING SECTIONS

No Scale

STATE OF MARYLAND — A. JAMES O'MARA — No. 2066 — REGISTERED PROFESSIONAL ENGINEER & LAND SURVEYOR

A. James O'Mara

CHECKED
EXAMINED

SD FILE NO. 282

No. 0412 DE

WASHINGTON SUBURBAN SANITARY COMMISSION	APPROVED September 29, 1966 (DATE) — ASSISTANT CHIEF ENGINEER	STORM DRAINS — AUTHOR. 3-11-65 — JOB NO. 65DE3068	SUPERVISION FOR MAIN LINES ONLY REQUIRED BY DEPT. OF STATE FORESTS & PARKS BALTIMORE, MD.	EXAMINED FOR: WATER & SEWER; R/W REQ'D.; OTHER UTILITIES	GREENHORNE & O'MARA ENGINEERS 6715 KENILWORTH AVENUE RIVERDALE, MARYLAND	CONTRACT No. 0412 DE	WHEATON DISTRICT STORM DRAINS STREAM SOUTHWEST OF VENTURA AVENUE WHEATON VIEW	DRAWING NO. 5 OF 5	SCALE As Shown — 651907-A Y

CE 487-281-5