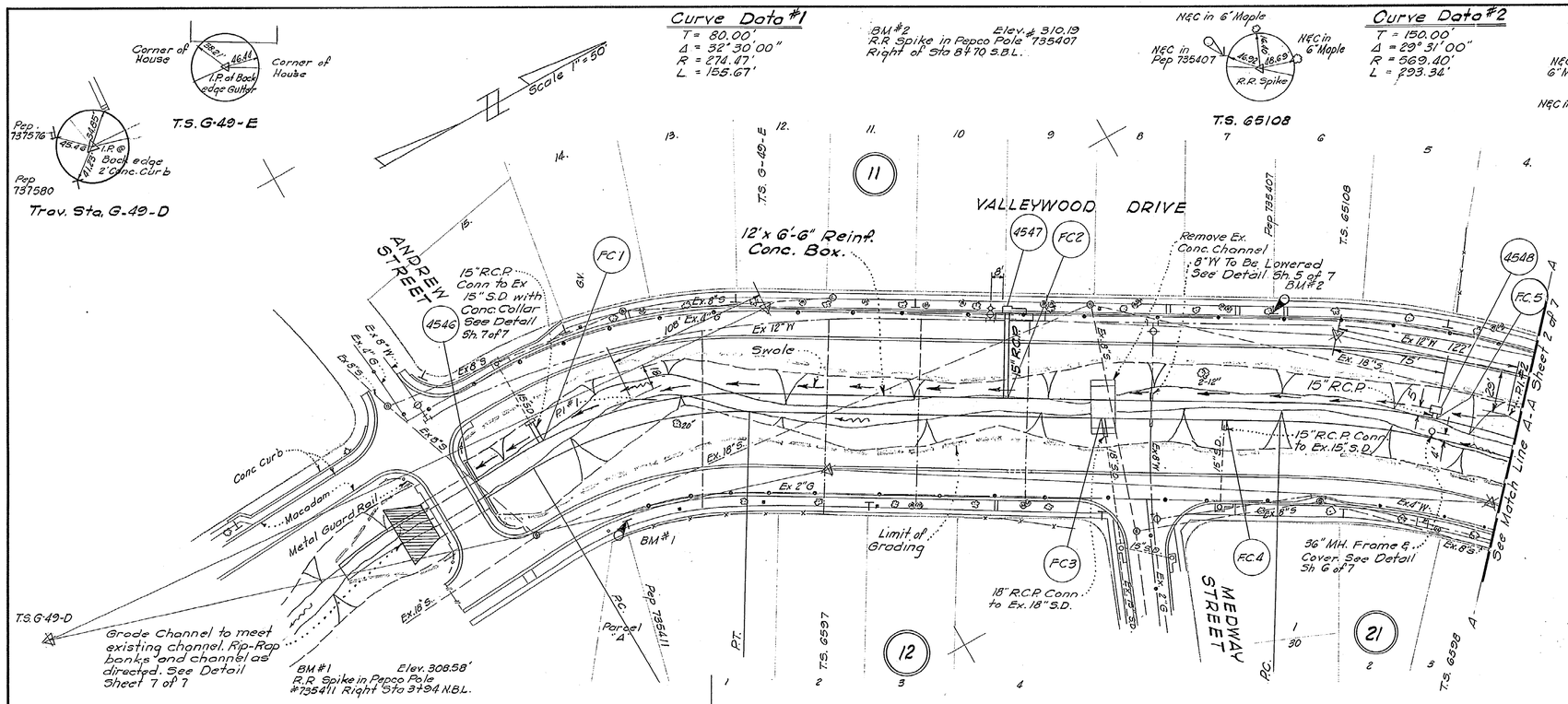

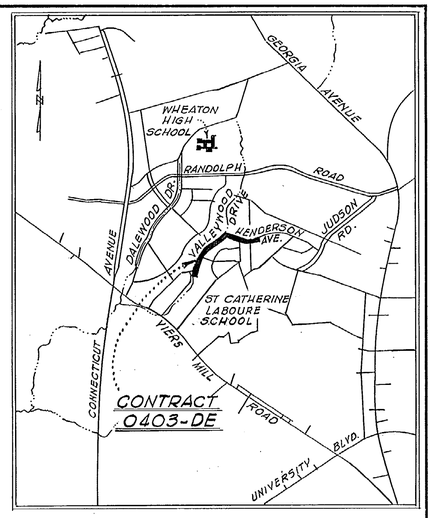

VICINITY MAP
Scale 1" = 2000'

GENERAL NOTES

1. All pipe elevations shown are invert elevations.
2. Top elevations of structures shall be adjusted in field to meet existing conditions.
3. Information concerning underground utilities was obtained from available records, but the Contractor must determine the location and elevations of the mains by digging test pits, by hand, at all utility crossings, well in advance of trenching.
4. Repairs to utilities or private property damaged as a result of the Contractors negligence or method of operation must be made at his expense.
5. Private utilities that conflict with the proposed construction will be adjusted by the owners thereof, at no expense to the Contractor.
6. Maximum pipe lengths shall be eight (8) feet in curve No. four (4) & four (4) feet in curve No. five (5).
7. Grading shall be done in such a manner as to provide positive drainage. Seed all graded areas 3:1 or greater. All other graded areas shall be seeded and mulched unless otherwise specified or directed

DATE	DESCRIPTION
	REVISIONS

CONTRACT NO. 0403 - DE

CHECKED	
EXAMINED	
DRAWN	
TRACED	
CHECKED	
EXAMINED	
STARTED	

WASHINGTON SUBURBAN SANITARY COMMISSION

APPROVED February 21, 1966
DATE
Alfred Sachs
DEPUTY CHIEF ENGINEER

7-65002

STORM DRAIN
AUTHOR
2-18-65
JOB NO.
65 DE 2990

SUPERVISION FOR MAIN LINES ONLY REQUIRED BY DEPT. OF STATE FORESTS & PARKS BALTIMORE, MD.

EXAMINED FOR		
WATER & SEWER	HK	2/7/66
NOR/W REQ'D		
OTHER UTILITIES	HS	2/7/66

HAYES, SEAY, MATTERN & MATTERN
ARCHITECTS ENGINEERS
WASHINGTON, D. C.

CONTRACT 0403-DE

GLENMONT DISTRICT
STORM DRAINS
VALLEYWOOD DRIVE & HENDERSON AVENUE
CONNECTICUT AVENUE ESTATES & VICINITY

DRAWING NO. 1 OF 7

215 NW 3
65467
Y
30 NW 6-15
NW 6-2

CE487-275-1

SD FILE NO. 276

Maryland State Archives

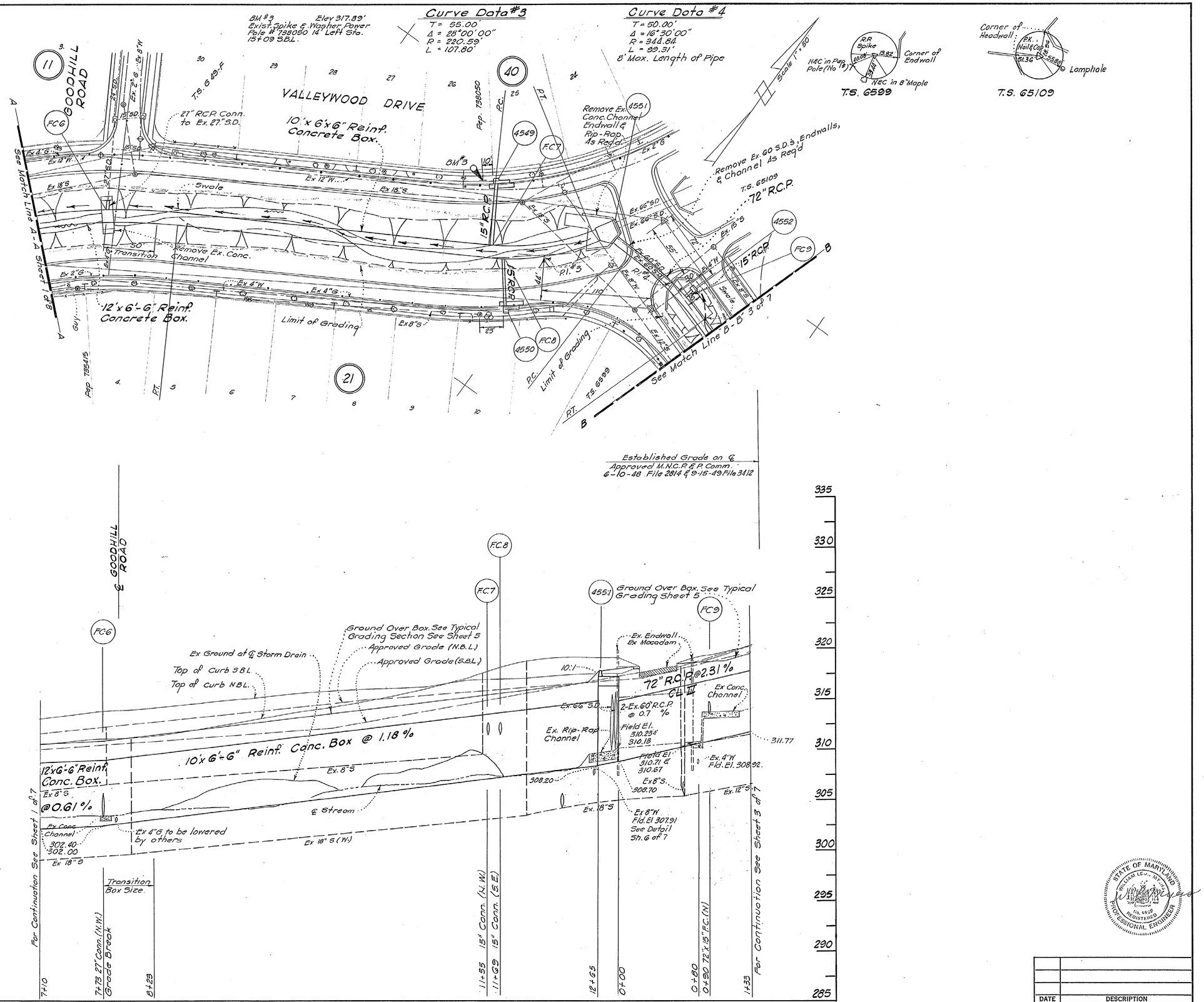

DATE	DESCRIPTION

REVISIONS

CONTRACT NO. 0403 - DE

CHECKED
EXAMINED
DRAWN
TRACED
CHECKED
EXAMINED
STARTED

WASHINGTON SUBURBAN SANITARY COMMISSION

APPROVED February 21, 1966 DATE

Alfred Fischer DEPUTY CHIEF ENGINEER

STORM DRAIN
AUTHOR 2-18-65
JOB NO. 65 DE 2990

SUPERVISION FOR MAIN LINES ONLY REQUIRED BY DEPT. OF STATE FORESTS & PARKS BALTIMORE, MD.

EXAMINED FOR
STORM SEWERS
R/W REQ'D
OTHER UTILITIES

HAYES, SEAY, MATTERN & MATTERN ARCHITECTS ENGINEERS WASHINGTON, D. C.

CONTRACT 0403-DE

GLENMONT DISTRICT
STORM DRAINS
VALLEYWOOD DRIVE & HENDERSON AVENUE
CONNECTICUT AVENUE ESTATES & VICINITY

DRAWING NO. 2 OF 7

215 NW 3
216 NW 3
65468
Y

CE487-275-2

SD FILE NO. 276

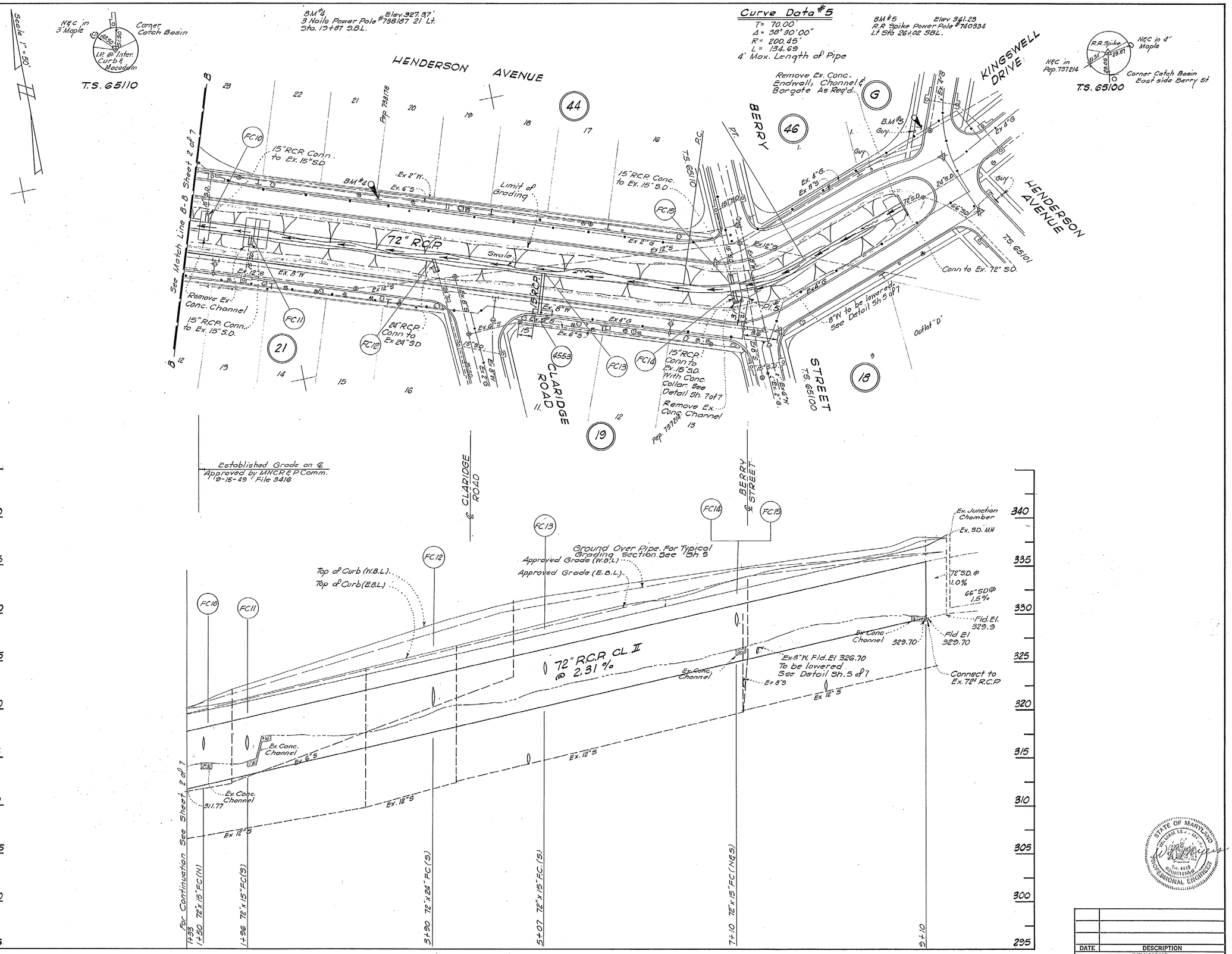

DATE	DESCRIPTION

REVISIONS

CONTRACT NO. 0403 - DE

CHECKED	
EXAMINED	
DRAWN	
TRACED	
CHECKED	
EXAMINED	
STARTED	

WASHINGTON SUBURBAN SANITARY COMMISSION

APPROVED February 21, 1966 (DATE)
Alfred Bachin
DEPUTY CHIEF ENGINEER

STORM DRAIN	
AUTHOR	2-16-65
JOB NO.	65 DE 2990

SUPERVISION FOR MAIN LINES ONLY REQUIRED BY DEPT. OF STATE FORESTS & PARKS BALTIMORE, MD.

EXAMINED FOR		
STORM SEWERS		
R/W REQ'D		
OTHER UTILITIES		

HAYES, SEAY, MATTERN & MATTERN
ARCHITECTS ENGINEERS
WASHINGTON, D. C.

CONTRACT 0403-DE

GLENMONT DISTRICT
STORM DRAINS
VALLEYWOOD DRIVE & HENDERSON AVENUE
CONNECTICUT AVENUE ESTATES & VICINITY

DRAWING NO. 3 OF 7

215 NW 3 & 216 NW 3
65469
Y
31 NW 6-4

CE 487-275-3

SD FILE NO. 276

Maryland State Archives

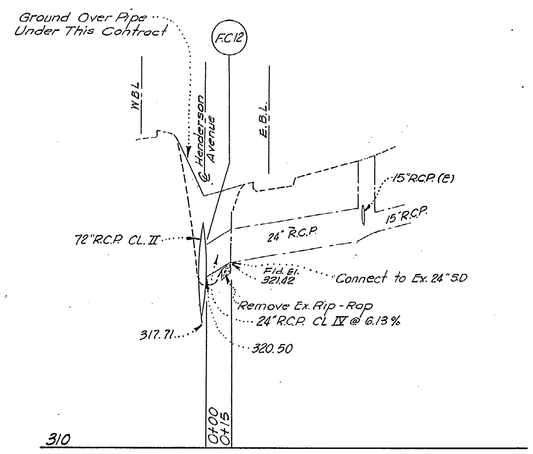

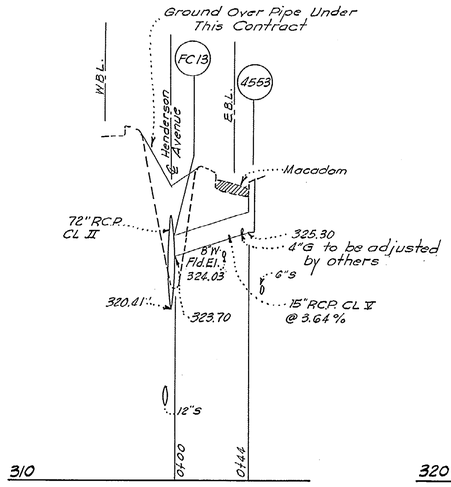

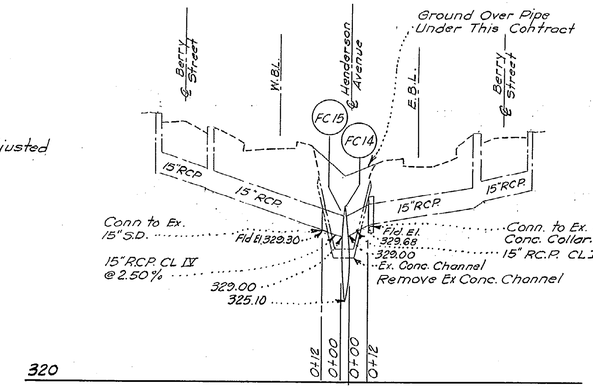

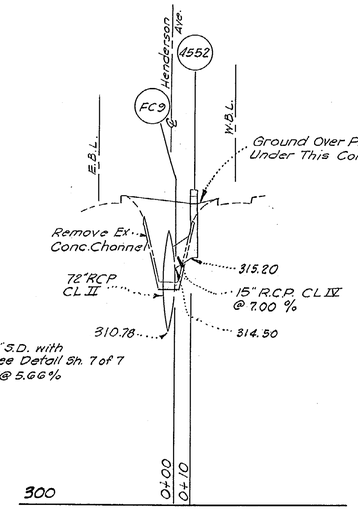

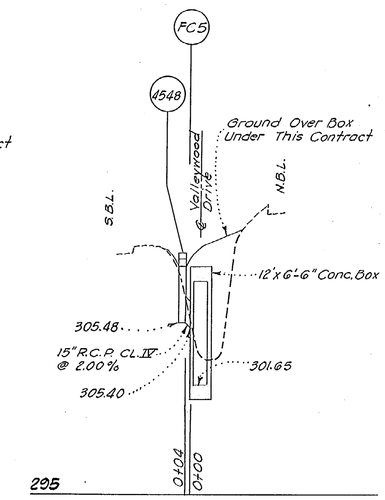

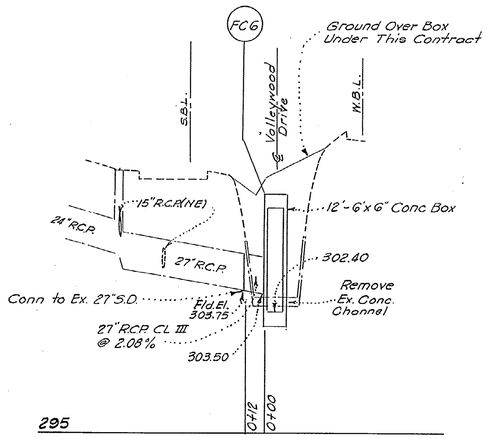

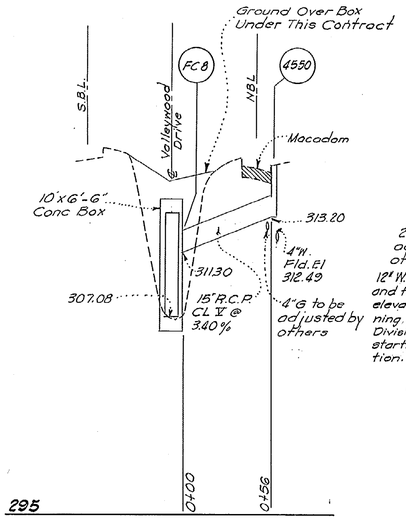

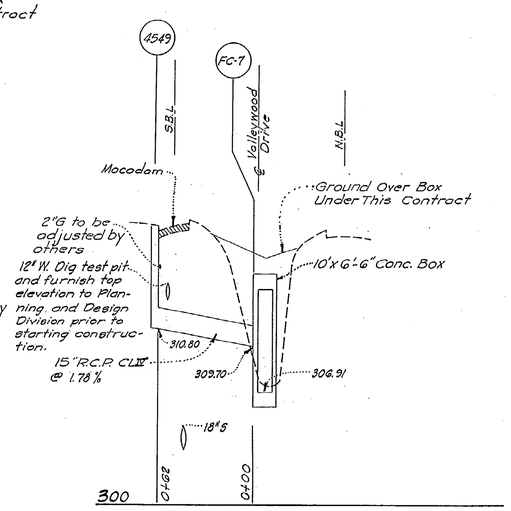

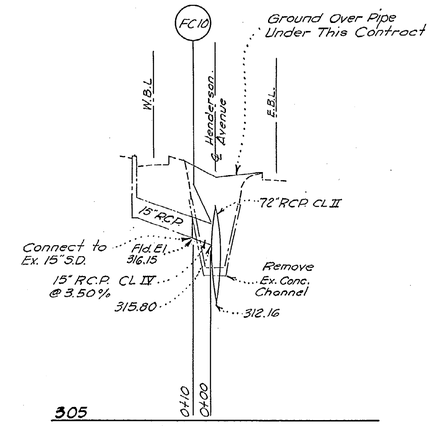

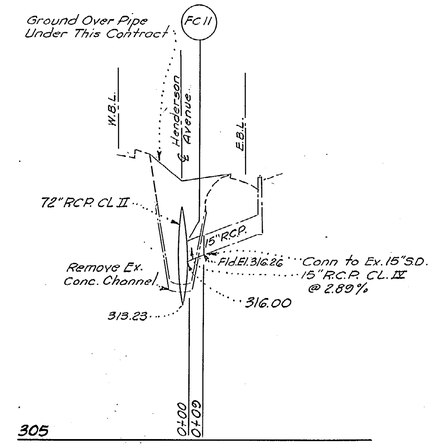

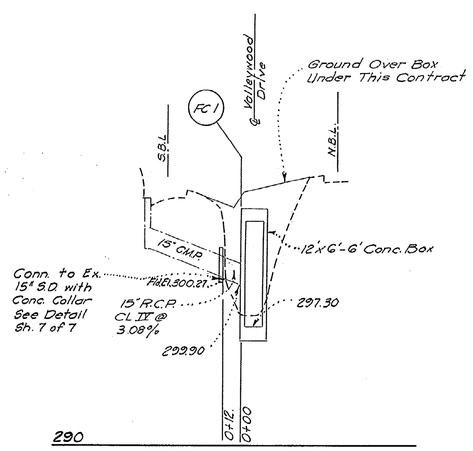

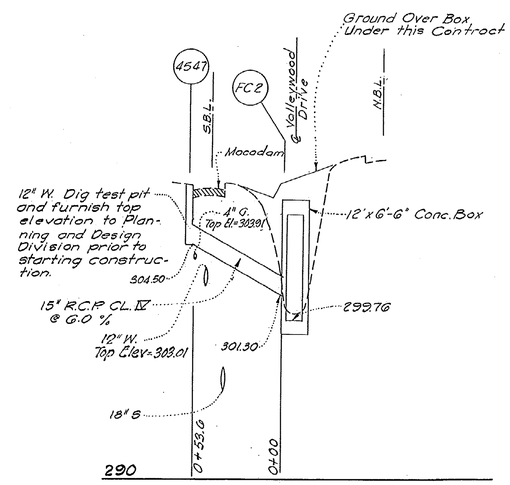

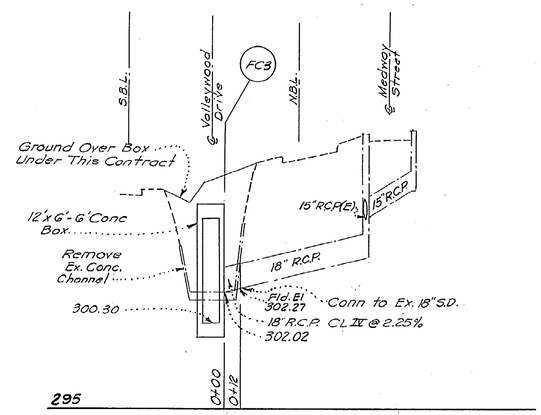

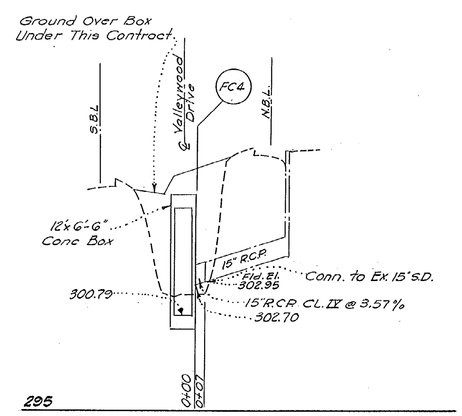

Note See Typical Grading Sections Sheet 5 for ground over pipe.

DATE	DESCRIPTION
5/20/66	Profile revision 4547 to FC2

REVISIONS

CONTRACT NO. 0403 - DE

STATE OF MARYLAND — WILLIAM L. ... — No. 4529 — REGISTERED PROFESSIONAL ENGINEER

CHECKED
EXAMINED
DRAWN
TRACED
CHECKED
EXAMINED
STARTED

WASHINGTON SUBURBAN SANITARY COMMISSION

APPROVED February 21, 1966 DATE
DEPUTY CHIEF ENGINEER

STORM DRAIN
AUTHOR 2-18-65
JOB NO. 65 DE 2990

SUPERVISION FOR MAIN LINES ONLY REQUIRED BY DEPT. OF STATE FORESTS & PARKS BALTIMORE, MD.

EXAMINED FOR		
STORM SEWERS		
R/W REQ'D		
OTHER UTILITIES		

HAYES, SEAY, MATTERN & MATTERN
ARCHITECTS ENGINEERS
1019 22 NDST., N. W. WASHINGTON, D. C.

CONTRACT 0403-DE

GLENMONT DISTRICT
STORM DRAINS
VALLEYWOOD DRIVE & HENDERSON AVENUE
CONNECTICUT AVENUE ESTATES & VICINITY

DRAWING NO. 4 OF 7

65470 Y

CE 487-275-4

SD FILE NO. 276

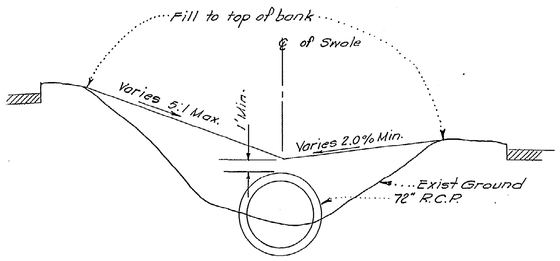

TYPICAL GRADING SECTION
HENDERSON AVENUE
Not to Scale

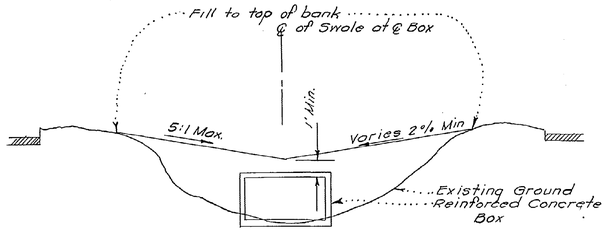

TYPICAL GRADING SECTION
VALLEYWOOD DRIVE
Sta 10+20 to Sta 12+55
Not to Scale

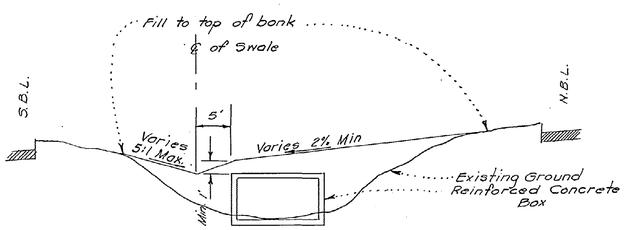

TYPICAL GRADING SECTION
VALLEYWOOD DRIVE
Sta. 0+00 to Sta 9+80
Not to Scale

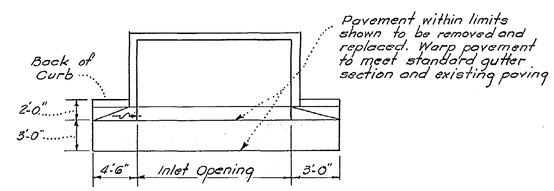

DETAIL PAVEMENT REPLACEMENT
AT INLETS #4547, #4549, #4550 and #4553
Not to Scale

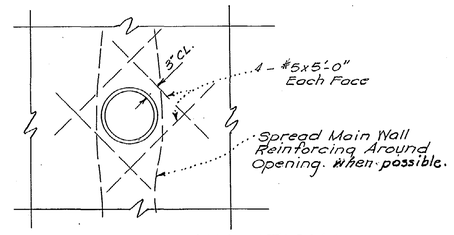

DETAIL PIPE CONNECTIONS
TO REINF. CONC. BOX
Not to Scale

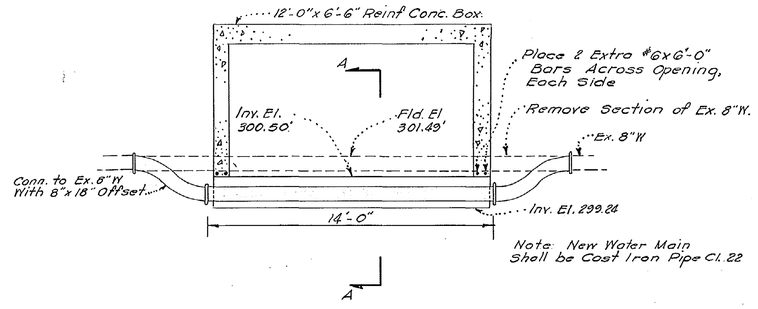

ELEVATION

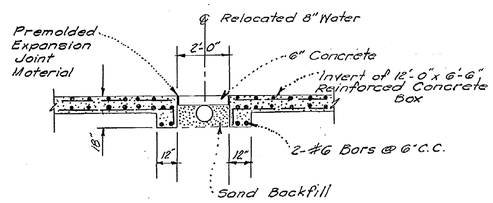

SECTION A-A

DETAIL 8" WATER LOWERING
VALLEYWOOD DRIVE
Scale 1/4" = 1'-0"

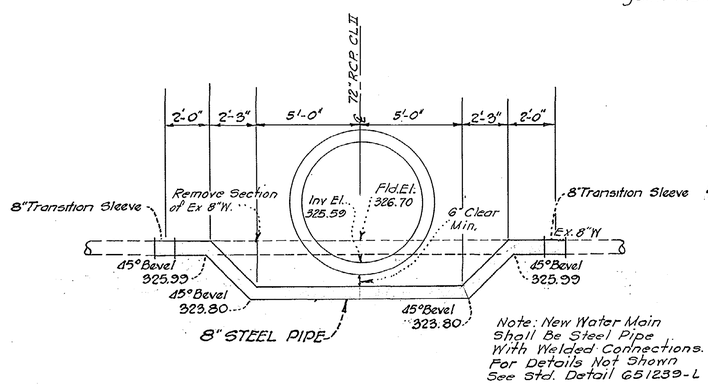

DETAIL 8" WATER LOWERING
HENDERSON AVENUE & BERRY ST.
Scale 1/4" = 1'-0"

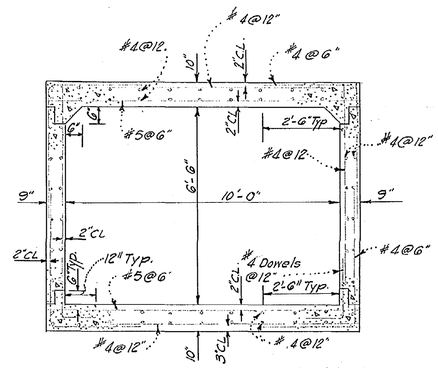

DETAIL 10'-0"x 6'-6" REINFORCED
CONCRETE BOX
Scale 3/8" = 1'-0"

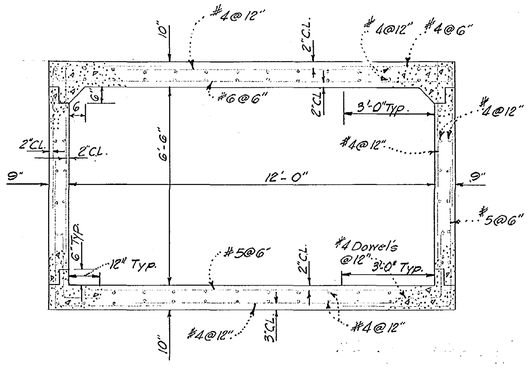

DETAIL 12'-0"x 6'-6" REINFORCED
CONCRETE BOX
Scale 3/8" = 1'-0"

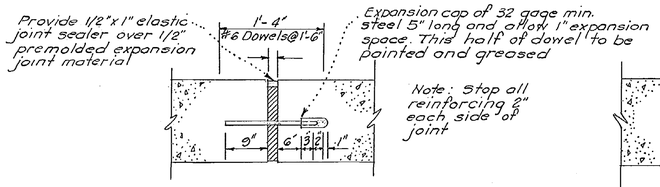

Note: The Expansion joint is to be placed at 60'-0"

DETAIL EXPANSION JOINT
Not to Scale

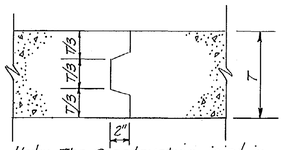

Note: The Construction joint is to be placed at 20'-0" intravals

DETAIL CONSTRUCTION JOINT
Not to Scale

GENERAL STRUCTURAL NOTES

1. All concrete shall be Class "A"
2. Reinforcing steel shall be intermediate grade steel $f_s = 20000$ p.s.i.; laps shall be as shown or 24 diameters. min.
3. All exposed edges of concrete shall be chamfered 1"x1"
4. All bars to have 2" cover except where shown otherwise.

STATE OF MARYLAND — WILLIAM L. MAYER — No. 4628 — REGISTERED PROFESSIONAL ENGINEER

DATE	DESCRIPTION
12/3/66	Correction of title for 10'-0" x 6'-6" Concrete Box.

REVISIONS

CONTRACT NO. 0403 - DE

CHECKED	
EXAMINED	
DRAWN	
TRACED	BGF.
CHECKED	
EXAMINED	
STARTED	

WASHINGTON SUBURBAN SANITARY COMMISSION

APPROVED February 21, 1966 (DATE)
Deputy Chief Engineer

STORM DRAIN	
AUTHOR	2-18-65
JOB NO.	65 DE 2990

SUPERVISION FOR MAIN LINES ONLY REQUIRED BY DEPT. OF STATE FORESTS & PARKS BALTIMORE, MD.

EXAMINED FOR		
STORM SEWERS		
R/W REQ'D		
OTHER UTILITIES		

HAYES, SEAY, MATTERN & MATTERN
ARCHITECTS ENGINEERS
WASHINGTON, D.C.

CONTRACT 0403-DE

GLENMONT DISTRICT
STORM DRAINS
VALLEYWOOD DRIVE & HENDERSON AVENUE
CONNECTICUT AVENUE ESTATES & VICINITY

DRAWING NO. 5 OF 7 — 65471 Y

SD FILE NO. 276

CE 487-275-5

Maryland State Archives

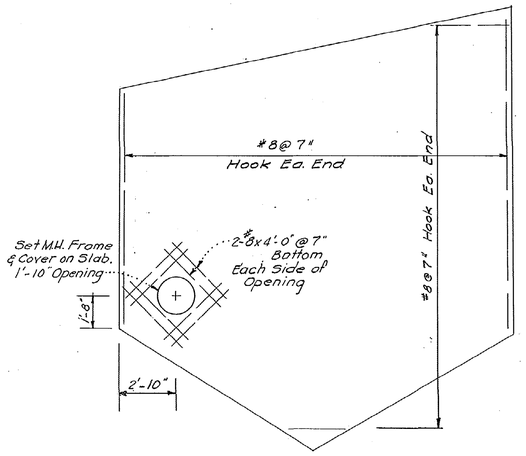

SLAB PLAN

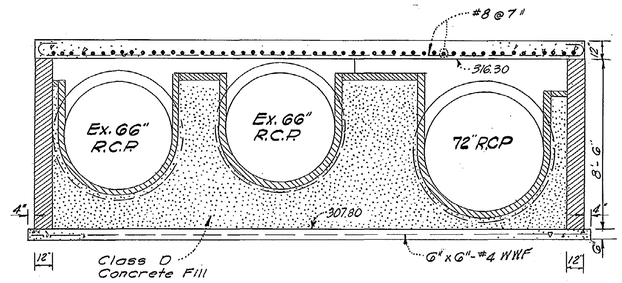

SECTION C-C

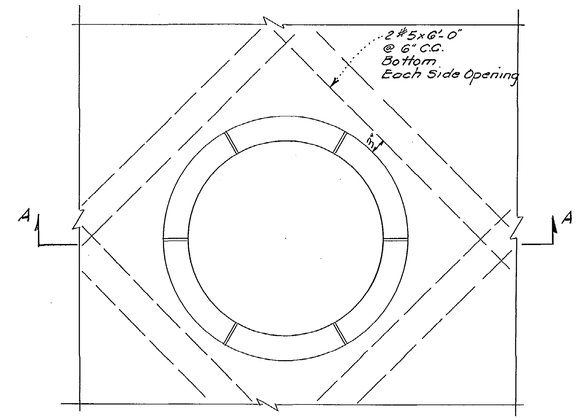

PLAN

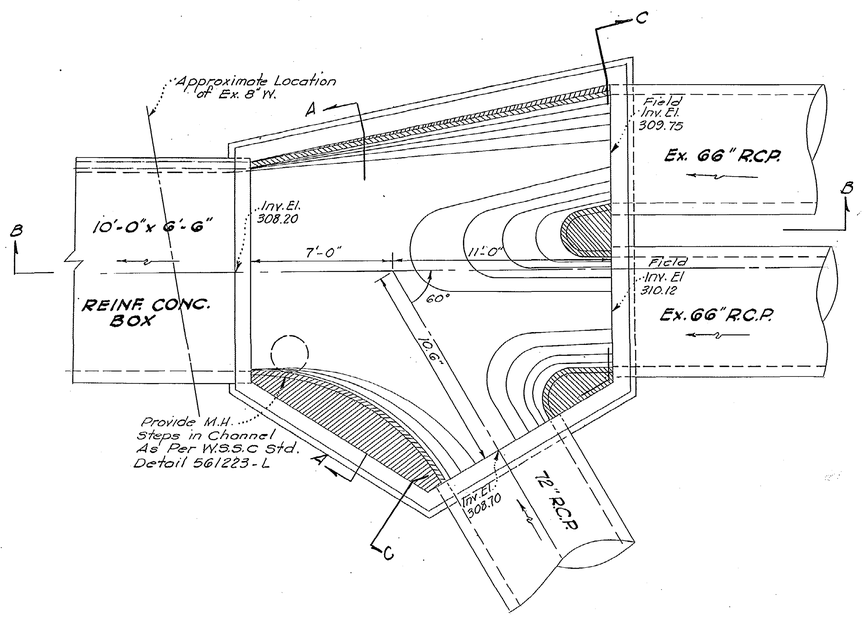

PLAN
(SLAB REMOVED)

For Details of Structure # 4551 not shown, see W.S.S.C. Std. Detail # 5G1217

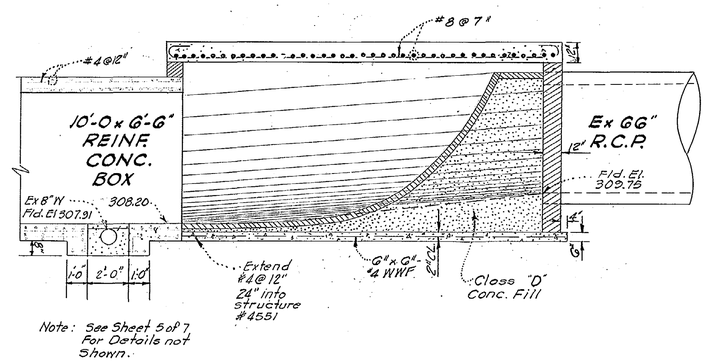

Note: See Sheet 5 of 7 For Details not Shown.

SECTION B-B

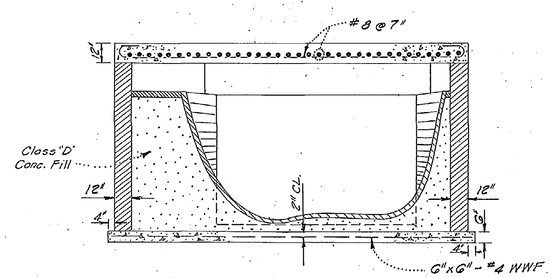

SECTION A-A

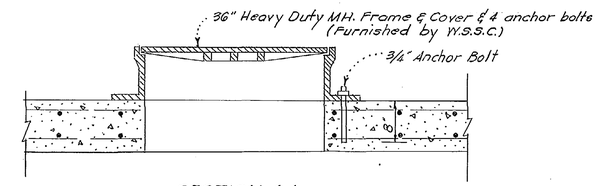

SECTION A-A

DETAIL 36" M.H. FRAME & COVER ON 12'-0"x 6'-6" REINF. CONC. BOX
Scale 3/4" = 1'-0"

STRUCTURE SCHEDULE

Number	Type	Top Elev.	Remarks
4546	Special	304.23	See Detail Sheet 7 of 7
4547	B-15 Inlet	(1)	
4548	D-Inlet	309.82	All Sides Open
4549	B-15 Inlet	(1)	
4550	B-15 Inlet	(1)	
4551	Special	317.30	See Detail Sheet 6 of 7
4552	D-Inlet	319.20	All Sides Open
4553	B-10 Inlet	(1)	
FC 1			15" Connection to 12'x6'-6" Box
FC 2			15" " " " " Box
FC 3			18" " " " " Box
FC 4			15" " " " " Box
FC 5			15" " " " " Box
FC 6			27" " " " " Box
FC 7			15" Connection to 10'x6'-6" Box
FC 8			15" " " " " Box
FC 9			72"x15" Field Connection
FC 10			72"x15" " "
FC 11			72"x15" " "
FC 12			72"x24" " "
FC 13			72"x15" " "
FC 14			72"x15" " "
FC 15			72"x15" " "

(1) Match Top of Exist. Curb Elevation

DETAIL STRUCTURE 4551
Scale 1/4" = 1'-0"

STATE OF MARYLAND — WILLIAM L. MYERS — No. 4579 — REGISTERED PROFESSIONAL ENGINEER

DATE	DESCRIPTION
	REVISIONS

CONTRACT NO. 0403-DE

CHECKED	
EXAMINED	
DRAWN	
TRACED	
CHECKED	
EXAMINED	
STARTED	

WASHINGTON SUBURBAN SANITARY COMMISSION

APPROVED February 21, 1966 — DATE — DEPUTY CHIEF ENGINEER

STORM DRAIN
AUTHOR
2-18-65
JOB NO.
65 DE 2990

SUPERVISION FOR MAIN LINES ONLY REQUIRED BY DEPT. OF STATE FORESTS & PARKS BALTIMORE, MD.

EXAMINED FOR		
STORM SEWERS		
R/W REQ'D		
OTHER UTILITIES		

HAYES, SEAY, MATTERN & MATTERN — ARCHITECTS ENGINEERS — WASHINGTON, D.C.

CONTRACT 0403-DE

GLENMONT DISTRICT
STORM DRAINS
VALLEYWOOD DRIVE & HENDERSON AVENUE
CONNECTICUT AVENUE ESTATES & VICINITY

DRAWING NO. 6 OF 7 — 65472 Y

CE487-275-6

SD FILE NO. 276

Maryland State Archives