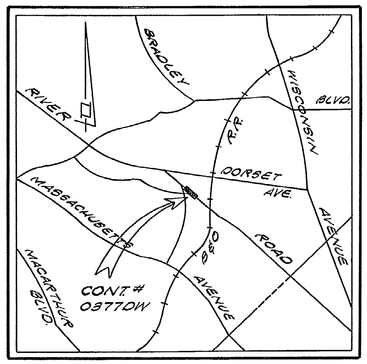

VICINITY MAP
1" = 2000'

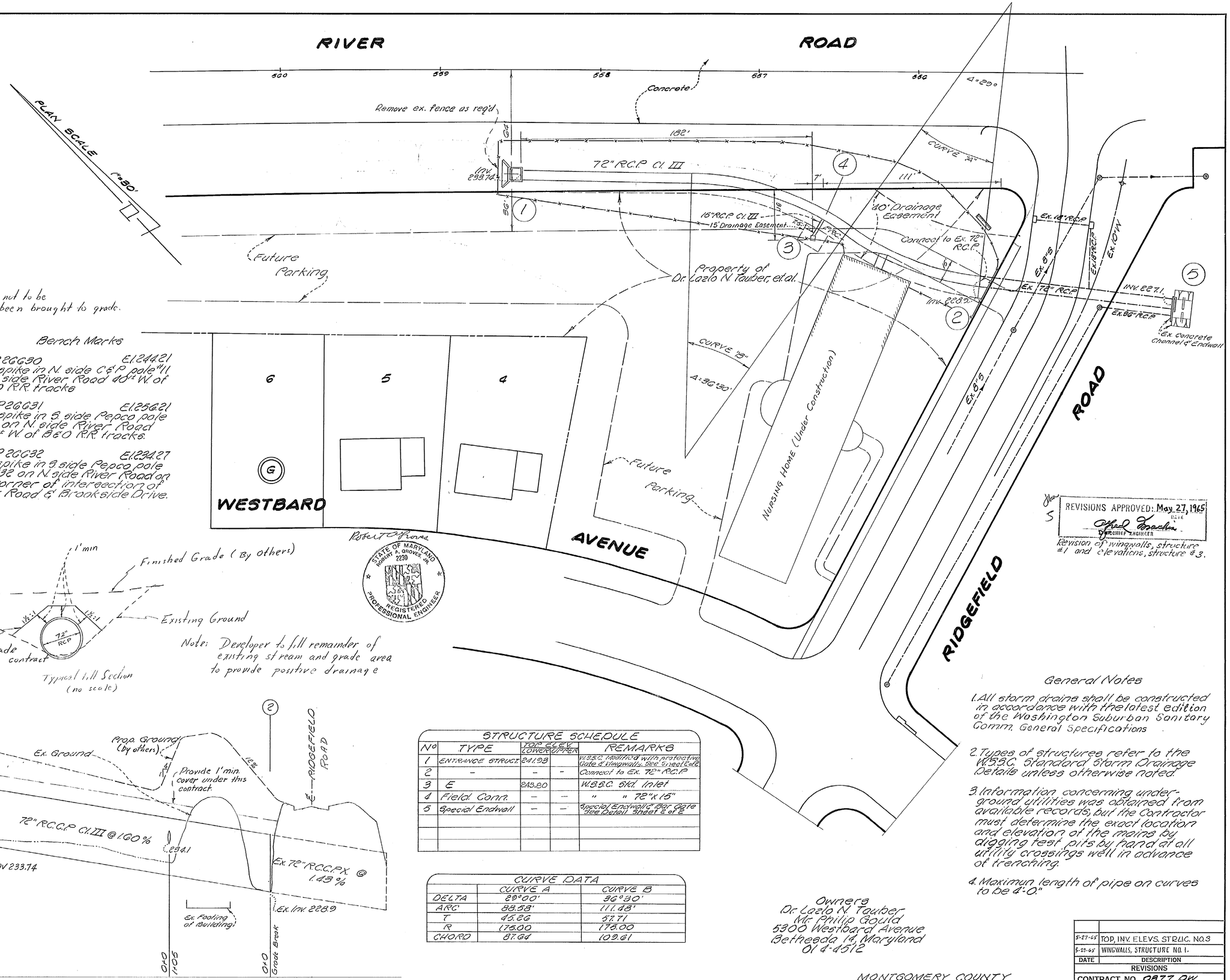

Note: Structure 3 and 15" RCP not to be installed until area has been brought to grade.

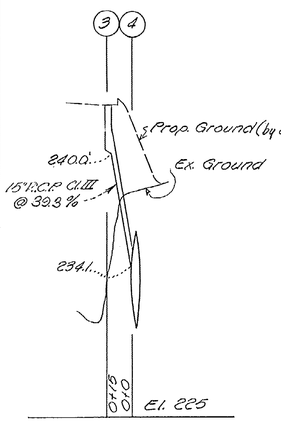

Profile Scale
Horizontal 1" = 50'
Vertical 1" = 5'

Bench Marks

D.T.P. 26G30 El. 244.21
R.R. spike in N. side C&P pole #11 on S. side River Road 40± W. of B&O R.R. tracks

D.T.P. 26G31 El. 256.21
R.R. spike in S. side Pepco pole no # on N. side River Road 450± W. of B&O R.R. tracks.

D.T.P. 26G32 El. 234.27
R.R. spike in S. side Pepco pole #63832 on N. side River Road on S.E. corner of intersection of River Road & Brookside Drive.

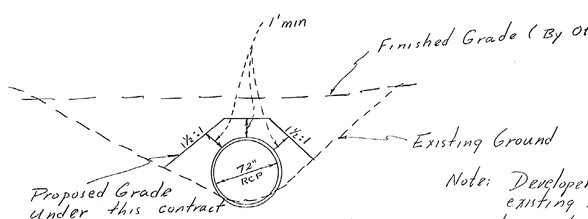

Typical fill Section
(no scale)

Note: Developer to fill remainder of existing stream and grade area to provide positive drainage

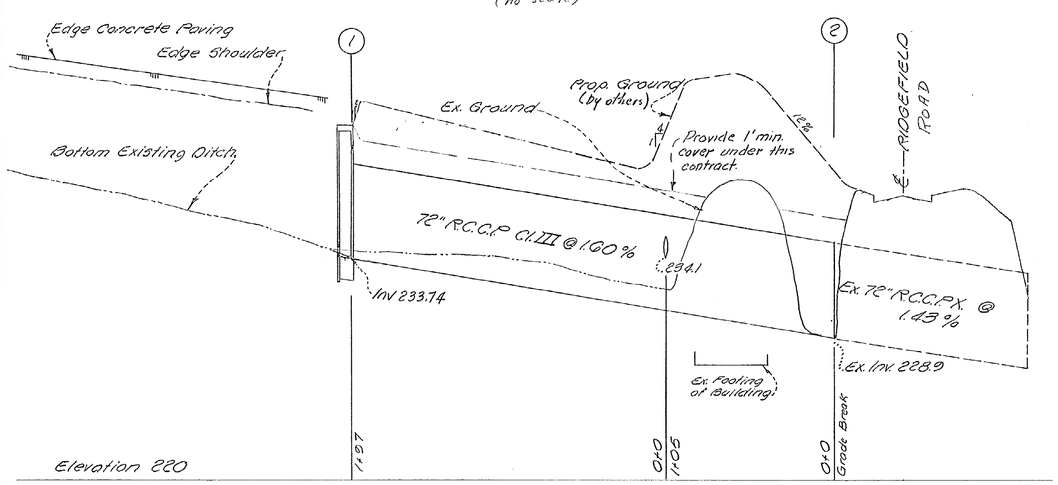

STRUCTURE SCHEDULE				
No	TYPE	TOP ELEV. LOWER	TOP ELEV. UPPER	REMARKS
1	ENTRANCE STRUCT.	241.08		W.S.S.C. Modified with protective Gate & Wingwalls. See Sheet 2 of 2
2	–	–	–	Connect to Ex. 72" RCP
3	E	243.20		W.S.S.C. Std. Inlet
4	Field Conn.	–	–	" " 72" x 15"
5	Special Endwall	–	–	Special Endwall & Bar Gate See Detail Sheet 2 of 2

CURVE DATA		
	CURVE A	CURVE B
DELTA	29°00'	36°30'
ARC	88.58'	111.48'
T	45.26	57.71
R	175.00	175.00
CHORD	87.64	109.61

General Notes

1. All storm drains shall be constructed in accordance with the latest edition of the Washington Suburban Sanitary Comm. General Specifications
2. Types of structures refer to the W.S.S.C. Standard Storm Drainage Details unless otherwise noted.
3. Information concerning underground utilities was obtained from available records, but the Contractor must determine the exact location and elevation of the mains by digging test pits by hand at all utility crossings well in advance of trenching.
4. Maximum length of pipe on curves to be 4'-0".

Owners
Dr. Lazlo N. Tauber
Mr. Philip Gould
5300 Westbard Avenue
Bethesda 14, Maryland
OL 4-4512

REVISIONS APPROVED: May 27, 1965
DATE
CHIEF ENGINEER
Revision of wingwalls, structure #1 and elevations, structure #3.

5-27-65	TOP, INV. ELEVS. STRUC. NO. 3
5-27-65	WINGWALLS, STRUCTURE NO. 1.
DATE	DESCRIPTION
REVISIONS	

CONTRACT NO. 0877 DW

MONTGOMERY COUNTY

DRAWN	WASHINGTON SUBURBAN SANITARY COMMISSION	APPROVED January 19, 1965 (DATE) CHIEF ENGINEER	STORM / DRAIN
TRACED			AUTHOR 9/3/64
CHECKED			JOB NO. 64DW2020
EXAMINED			
STARTED			

SUPERVISION FOR MAIN LINES ONLY NOT REQUIRED BY DEPT. OF STATE FORESTS & PARKS BALTIMORE, MD.

EXAMINED FOR		
WATER + SEWER		
R/W REQ'D	10/20/64	11/11/65
OTHER UTILITIES	HS	11/13/65

R. A. GROVES & ASSOC.
CIVIL ENGINEERS
4924 HAMPDEN LANE
BETHESDA, MARYLAND

CONT # 0877 DWX

GLEN ECHO DISTRICT
STORM DRAIN
RIDGEFIELD ROAD AT RIVER ROAD
WESTWOOD

DRAWING NO. 1 OF 2

207NW5
642144
Y

RELEASED 1-21-65

CE487-264-1

SD FILE NO. 265

Maryland State Archives

Note:

1. Provide W.S.S.C. Standard Handrailing on headwall and wingwalls.
2. Extend horizontal wingwall steel into wall of entrance structure.
3. All concrete to be W.S.S.C. Class "A."

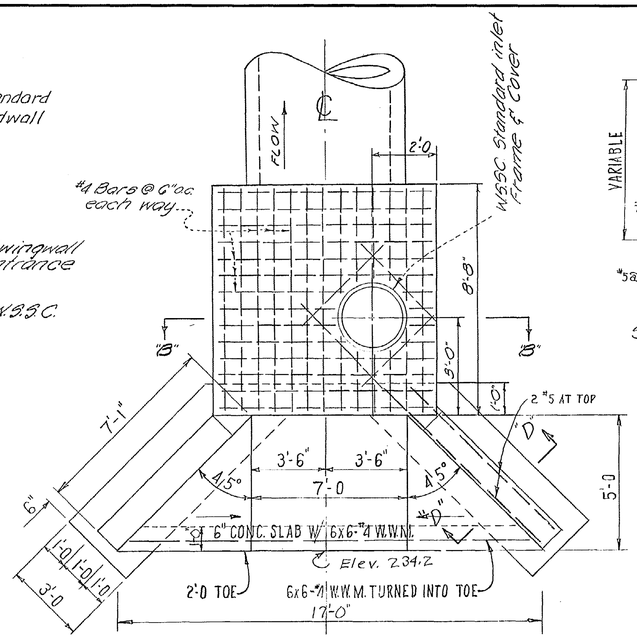

ENTRANCE STRUCTURE & PROTECTIVE GATE
STRUCTURE #1
NO SCALE

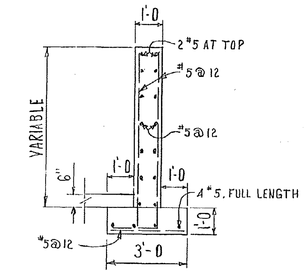

SECTION "D"-"D"

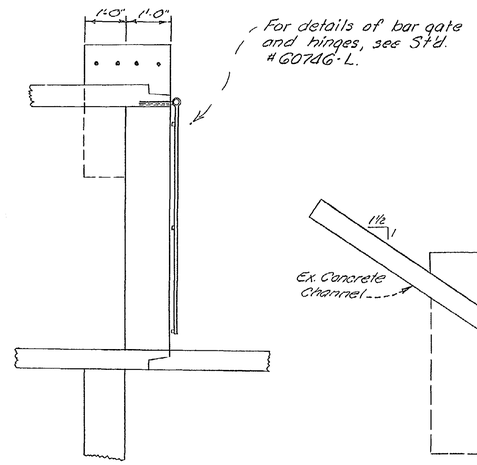

SECTION "A-A"
STRUCTURE #5

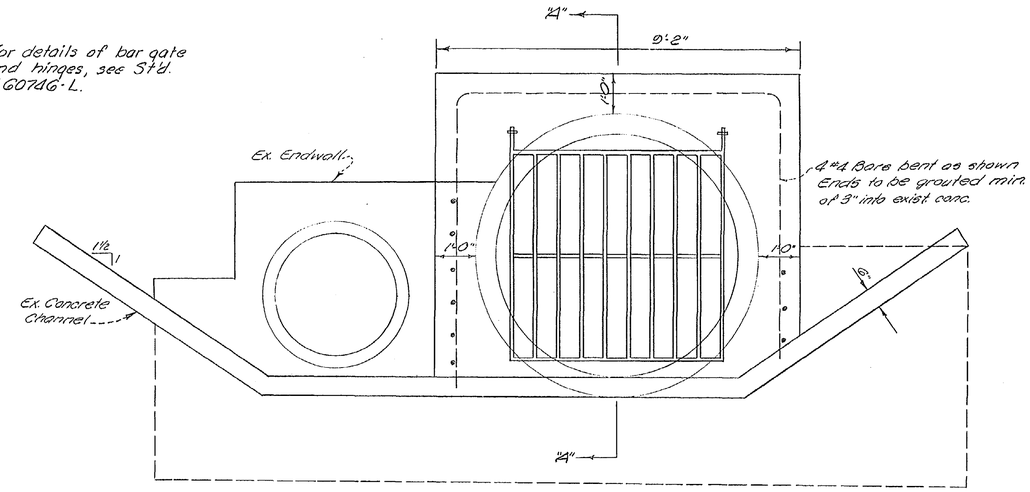

Use Class A Concrete

REVISIONS APPROVED: May 27, 1965
DATE
DEPT. CHIEF ENGINEER

Revision of wingwalls, structure #1.

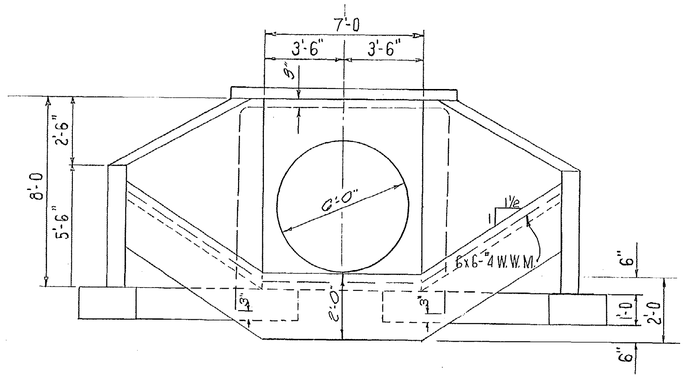

SECTION "C"-"C"

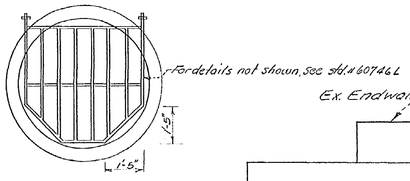

BAR GATE
DETAIL
FOR STRUCTURE #1

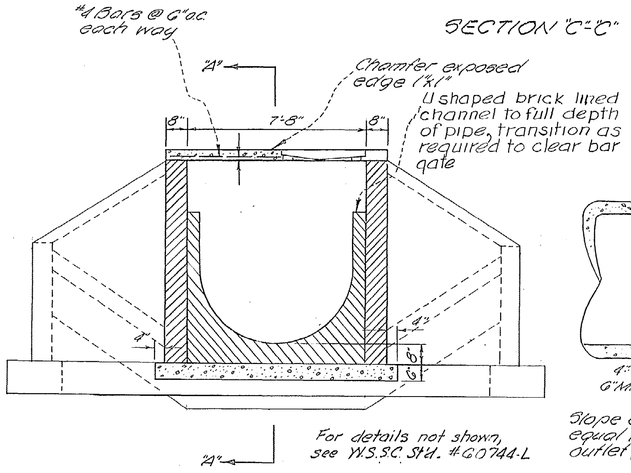

For details not shown, see W.S.S.C. Std. #60744-L

SECTION "B"-"B"

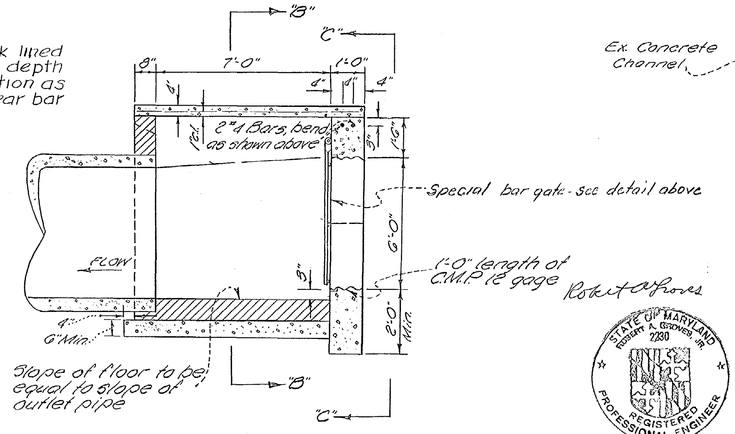

SECTION "A"-"A"

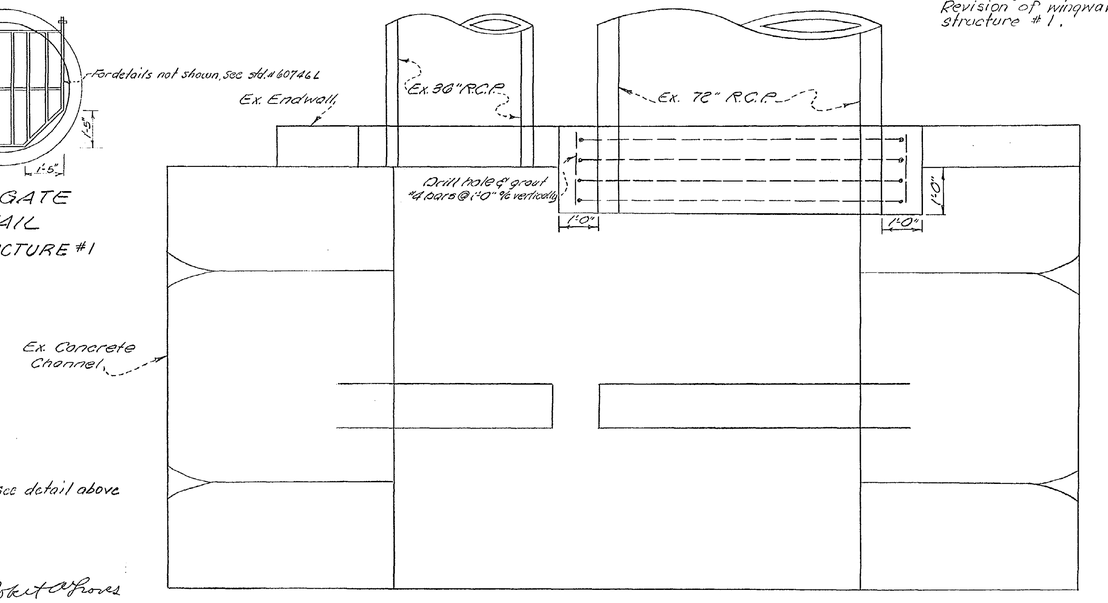

SPECIAL END WALL & BAR GATE
STRUCTURE #5
SCALE 1" = 2'

STATE OF MARYLAND
ROBERT A. GROVES, JR.
2230
REGISTERED PROFESSIONAL ENGINEER

DATE	DESCRIPTION
5-27-65	WINGWALLS, STRUCTURE NO. 1.

REVISIONS
CONTRACT NO. 0377 DW

DRAWN / TRACED / CHECKED / EXAMINED / STARTED	WASHINGTON SUBURBAN SANITARY COMMISSION	APPROVED January 19, 1965 DATE — CHIEF ENGINEER	STORM / DRAIN — AUTHOR 9/3/64 — JOB NO. 64DW2620	SUPERVISION FOR MAIN LINES ONLY BY DEPT. OF STATE FORESTS & PARKS BALTIMORE, MD.	EXAMINED FOR: WATER + SEWER, R/W REQ'D, OTHER UTILITIES	R.A. GROVES & ASSOC. CIVIL ENGINEERS 4924 HAMPDEN LANE BETHESDA, MARYLAND	CONT # 0377 DWX	GLEN ECHO DISTRICT STORM DRAIN RIDGEFIELD ROAD AT RIVER ROAD WESTWOOD	DRAWING NO. 2 OF 2	207NW5 642145 Y

CE487-264-2

SD FILE NO. 265