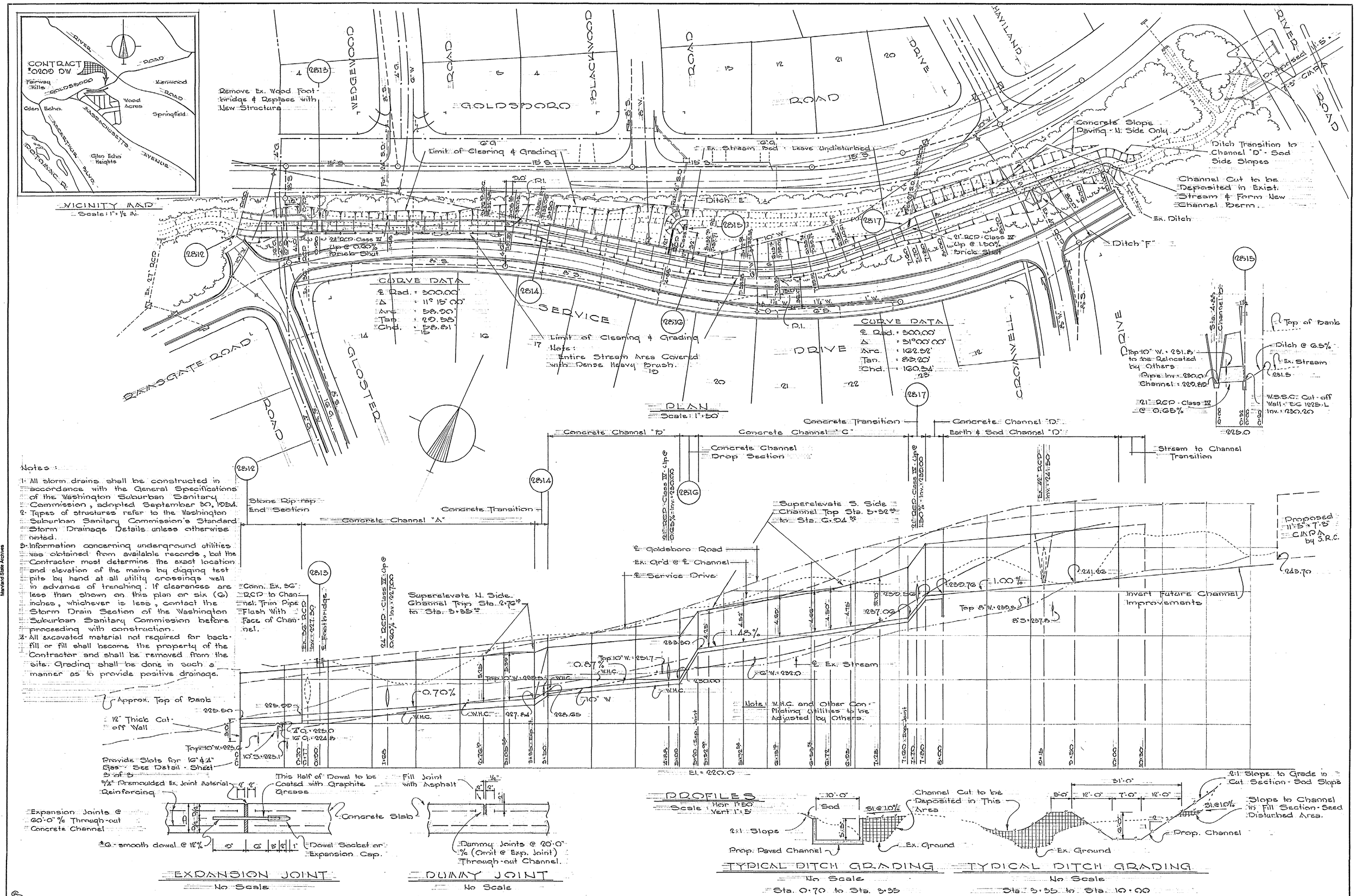

DRAWN	WASHINGTON SUBURBAN SANITARY COMMISSION	APPROVED November 27, 1961 (DATE) Robert J. McLeod (CHIEF ENGINEER)	AUTHOR.	WATER	SEWER
TRACED					
CHECKED					
EXAMINED			JOB NO. 53 DW	28012	
STARTED					

SUPERVISION FOR MAIN LINES ONLY REQUIRED BY DEPT. OF STATE FORESTS & PARKS BALTIMORE, MD.

EXAMINED FOR		
WATER & SEWER	CAH	10/24/61
No. R/W REQ'D		10/24/61
OTHER UTILITIES		10/24/61

MADDOX & HOPKINS ENGINEERS 8506 DIXON AVENUE SILVER SPRING, MD.

CONTRACT #0209 DW

GLEN ECHO DISTRICT STREAM IMPROVEMENT GOLDSBORO ROAD SERVICE DRIVE WOOD ACRES

DRAWING NO.	SCALE	
1 OF 3	As Shown	208 NW G 611 278 Y

SD FILE NO. 196

CE487-195-1

Maryland State Archives

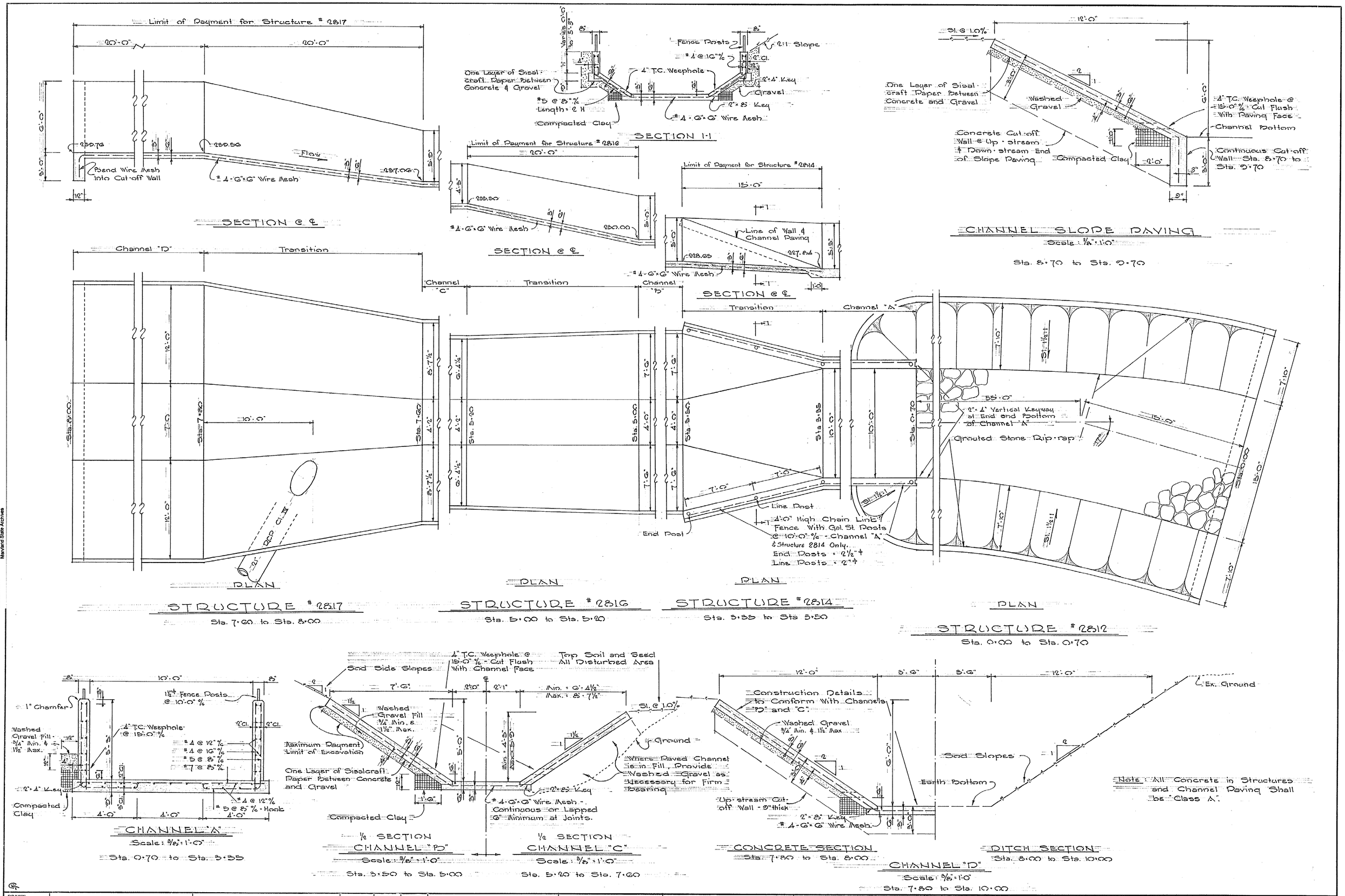

DRAWN / TRACED / CHECKED / EXAMINED / STARTED	WASHINGTON SUBURBAN SANITARY COMMISSION	APPROVED November 27, 1961 (DATE) Robert J. McLean (CHIEF ENGINEER)	AUTHOR. / JOB NO.	WATER / SEWER / 58 DW 2802	SUPERVISION FOR MAIN LINES ONLY REQUIRED BY DEPT. OF STATE FORESTS & PARKS BALTIMORE, MD.	EXAMINED FOR: WATER & SEWER / R/W REQ'D / OTHER UTILITIES	MADDOX & HOPKINS ENGINEERS 8506 DIXON AVENUE SILVER SPRING, MD.	CONTRACT # 0209 DW	GLEN ECHO DISTRICT STREAM IMPROVEMENT GOLDSBORO ROAD SERVICE DRIVE WOOD ACRES	DRAWING NO. 2 OF 3 / SCALE As Shown / 208 NW 6 / 611 470 / Y

CF 487-195 -2

SD FILE NO. 196

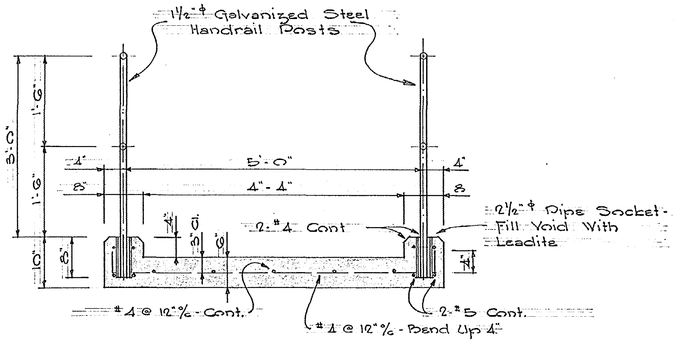

SECTION 2-2

Scale: ¾" = 1'-0"

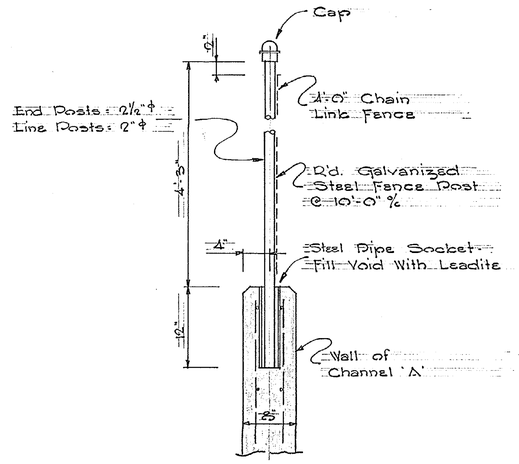

FENCE POST DETAIL

Scale: 1" = 1'-0"

Sta. 0+30 to Sta. 3+50

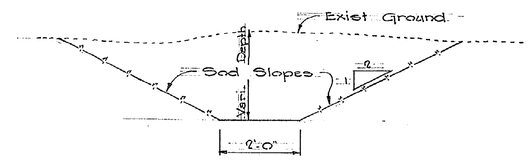

DITCH "E"

Scale: ½" = 1'-0"

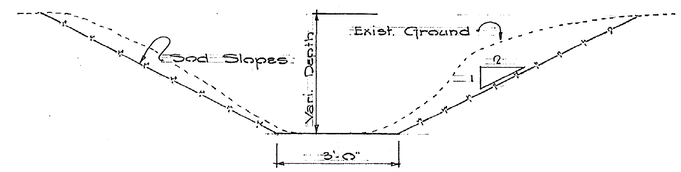

DITCH "F"

Scale: ½" = 1'-0"

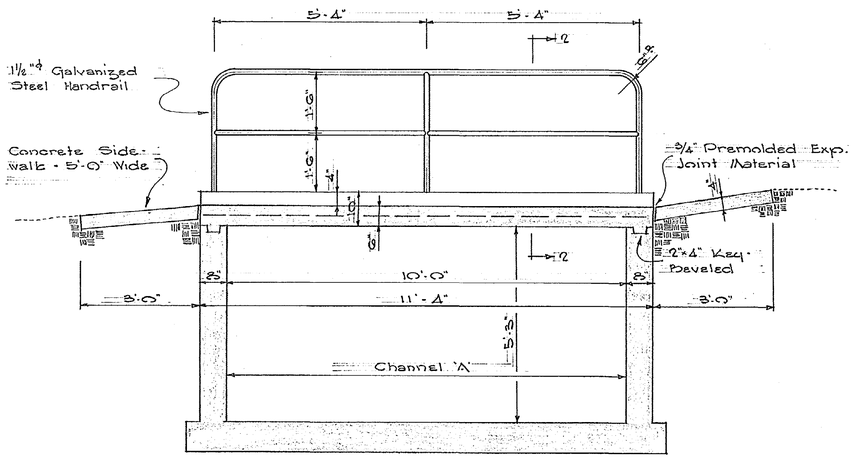

ELEVATION

Scale: ½" = 1'-0"

STRUCTURE #2813

CONCRETE FOOTBRIDGE

Sta. 0+90

Note: Concrete Footbridge Deck, Walks, and Gal. Steel Handrails to be bid as a Lump Sum Item.

STRUCTURE SCHEDULE		
No	Type	Remarks
2812	Out-fall Structure	See Detail, Sheet 2 of 3
2813	Conc. Footbridge	" " , Sheet 3 of 3
2814	Channel Transition	" " , Sheet 2 of 3
2815	Conc. Cut-off Wall	W.S.S.C. St'd.
2816	Channel Transition	See Detail, Sheet 2 of 3
2817	Channel Transition	" " , Sheet 2 of 3

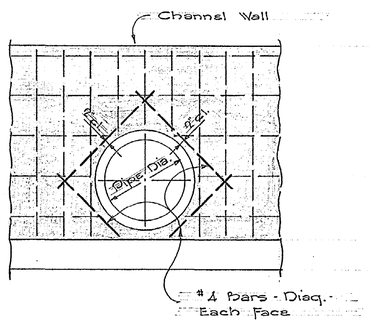

PIPE CONNECTION WALL REINFORCING - CHANNEL "A"

Scale: ½" = 1'-0"

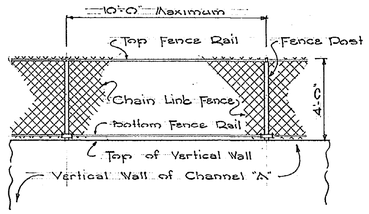

CHAIN LINK FENCE CHANNEL "A"

Scale: ¼" = 1'-0"

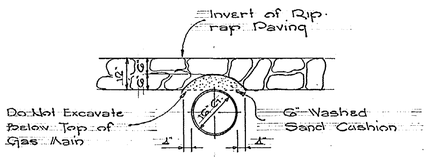

SLOT DETAIL FOR RIP-RAP SECTION

No Scale

Bench Marks

D.T.P. 15100 El. = 232.36
N & W in N. side Pepco pole # G23024 S. side Goldsboro Rd. 1000'± W. River Rd.

D.T.P. 15200 El. = 240.05
N & W in N. side Pepco pole # G23022 on S. side Goldsboro Rd. 600'± W. River Rd.

D.T.P. 15201 El. = 248.09
N & W in N. side Pepco pole # G23020 on S. side Goldsboro Rd. 150'± W. River Rd.

Structural Note:

1. All concrete structures designed in accordance with the latest AASHO and ACI specifications.
2. Footbridge live load = 100 #/□'.
3. Concrete = 3500 #/□" @ 28 days. (Class "A")
4. Concrete formwork to have plywood or similar facings to insure a smooth surface.
5. Concrete, in forms, shall be thoroughly vibrated during placing.
6. Exposed concrete edges shall be chamfered 1"x1".
7. Steel = 20,000 #/□", deformed bars in accordance with the latest ASTM specifications.
8. Steel bars shall be supported in accordance with the latest ACI Detailing Manual.
9. Lap all steel bars 30 diameters where required.
10. Gravel used for backfill shall be washed and free of deleterious material.
11. Where channel paving is poured on gravel, provide a layer of sisalcraft paper between the concrete and gravel.
12. All cleared and graded areas are to be covered with top soil and seeded, except for the 2:1 slopes adjacent to the channel, which are to be sodded.

DRAWN	WASHINGTON SUBURBAN SANITARY COMMISSION	APPROVED November 27, 1961 (DATE) Robert J. McLaughlin (CHIEF ENGINEER)	AUTHOR.	WATER	SEWER	SUPERVISION FOR MAIN LINES ONLY REQUIRED BY - DEPT. OF STATE FORESTS & PARKS BALTIMORE, MD.	EXAMINED FOR		MADDOX & HOPKINS ENGINEERS 8506 DIXON AVENUE SILVER SPRING, MD.	CONTRACT #0200 DW	GLEN ECHO DISTRICT STREAM IMPROVEMENT GOLDSBORO ROAD SERVICE DRIVE WOOD ACRES	DRAWING NO. 3 OF 3	SCALE As Shown	208 NW 6 G11 180 Y
TRACED							WATER & SEWER							
CHECKED							B/W REG'D							
EXAMINED							OTHER UTILITIES							
STARTED			JOB NO.	D8DW	2802									

CE487-195 -3

SD FILE NO. 196

Maryland State Archives