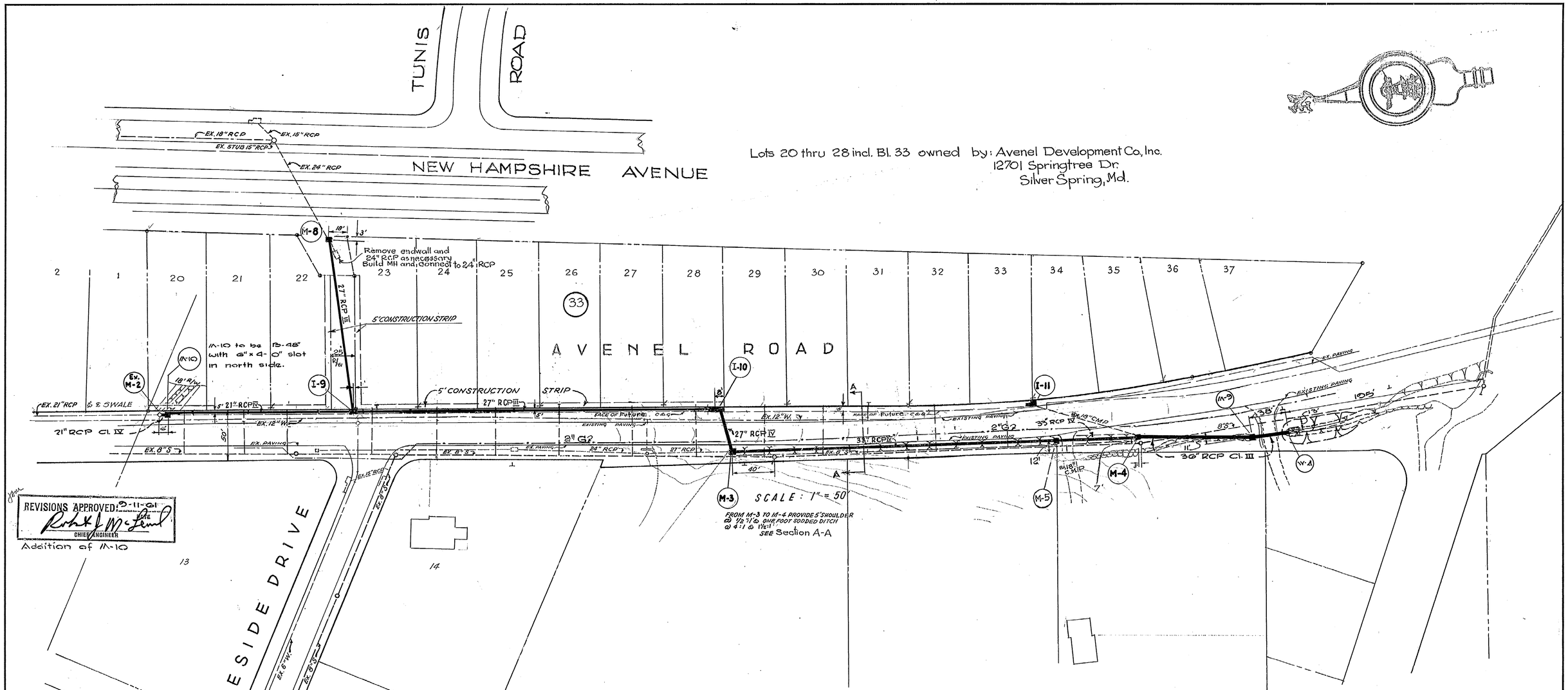

REVISIONS APPROVED: 9-11-61
Robert J. McLeod
CHIEF ENGINEER
Addition of IN-10

GENERAL NOTES

1. All storm drains shall be constructed in accordance with the General Specifications of the Washington Suburban Sanitary Commission, adopted September 30, 1954.
2. Steps shall be provided in the channels of structures involving pipes larger than 27" in accordance with the Washington Suburban Sanitary Commission's Standard Detail.
3. Types of structures refer to the Washington Suburban Sanitary Commission's Standard Storm Drainage Details unless otherwise noted.
4. Information concerning underground utilities was obtained from available records, but the Contractor must determine the exact location and elevation of the mains by digging test pits by hand at all utility crossings well in advance of trenching. If clearances are less than shown on this plan or six (6) inches, whichever is less, contact the Storm Drain Section of the Washington Suburban Sanitary Commission before proceeding with construction.

STRUCTURE SCHEDULE

No	Type	Top El.	Remarks	
I-9	A-5	1.237.19 / 2.236.81	Std. W.S.S.C. Detail	
I-10	A-15	1.219.62 / 2.218.78	" " "	
I-11	B-10	1.208.56 / 2.208.20	" " "	
M-5	B-48"	208.00	Std. W.S.S.C Detail	*
M-3	B-48"	218.9	Std. W.S.S.C. Detail	*
M-4	Special B	204.7	See Detail sheet 2	*
M-8	B-48"	236.5	Std. W.S.S.C Detail	*
W-4	Std. W.S.S.C cut-off wall w/protective gate and 10' concrete paving			
M-9	B-48"	201.1	MH Modified	*†

*With 6" x 4' opening in N. wall
† Top slab to be 4" thick with #4 bars @ 6" both ways. Install inlet frame & cover.

1. PROVIDE ONE FOOT SODDED DITCH ON WEST SIDE OF AVENEL ROAD FROM M-3 to M-4.

EXAMINED FOR		
R/W REQ'D	[illegible]	6/26/61
WATER & SEWER	[illegible]	6/26/61
OTHER UTILITIES	[illegible]	6/26/61

SUPERVISION
FOR MAIN LINES ONLY
REQUIRED BY
DEPT. OF STATE FORESTS & PARKS - BALTO., MD.

REVISIONS	
DATE	DESCRIPTION
9/11/61	Addition of IN-10

Contract No. 0187-DE

DRAWN A.Z. H.T.C.	WASHINGTON SUBURBAN SANITARY COMMISSION	APPROVED July 24, 1961 (DATE) Robert J. McLeod, CHIEF ENGINEER	AUTHOR. / JOB NO.	WATER / STORM SEWER / GIDE 5001
TRACED				
CHECKED				
EXAMINED				
STARTED				

MADDOX & HOPKINS
CIVIL ENGINEERS
SILVER SPRING, MD.

CONTRACT No. 0187-DE

SITKA DISTRICT
STORM DRAIN PLAN
OAKVIEW
AVENEL ROAD

SD FILE NO. 183

DRAWING	SCALE	
NO. 1 OF 2	PLAN 1" = 50'	611267 Y

CE487-182-1

RELEASED 7-28-61

E-11 6-59 SC

Maryland State Archives

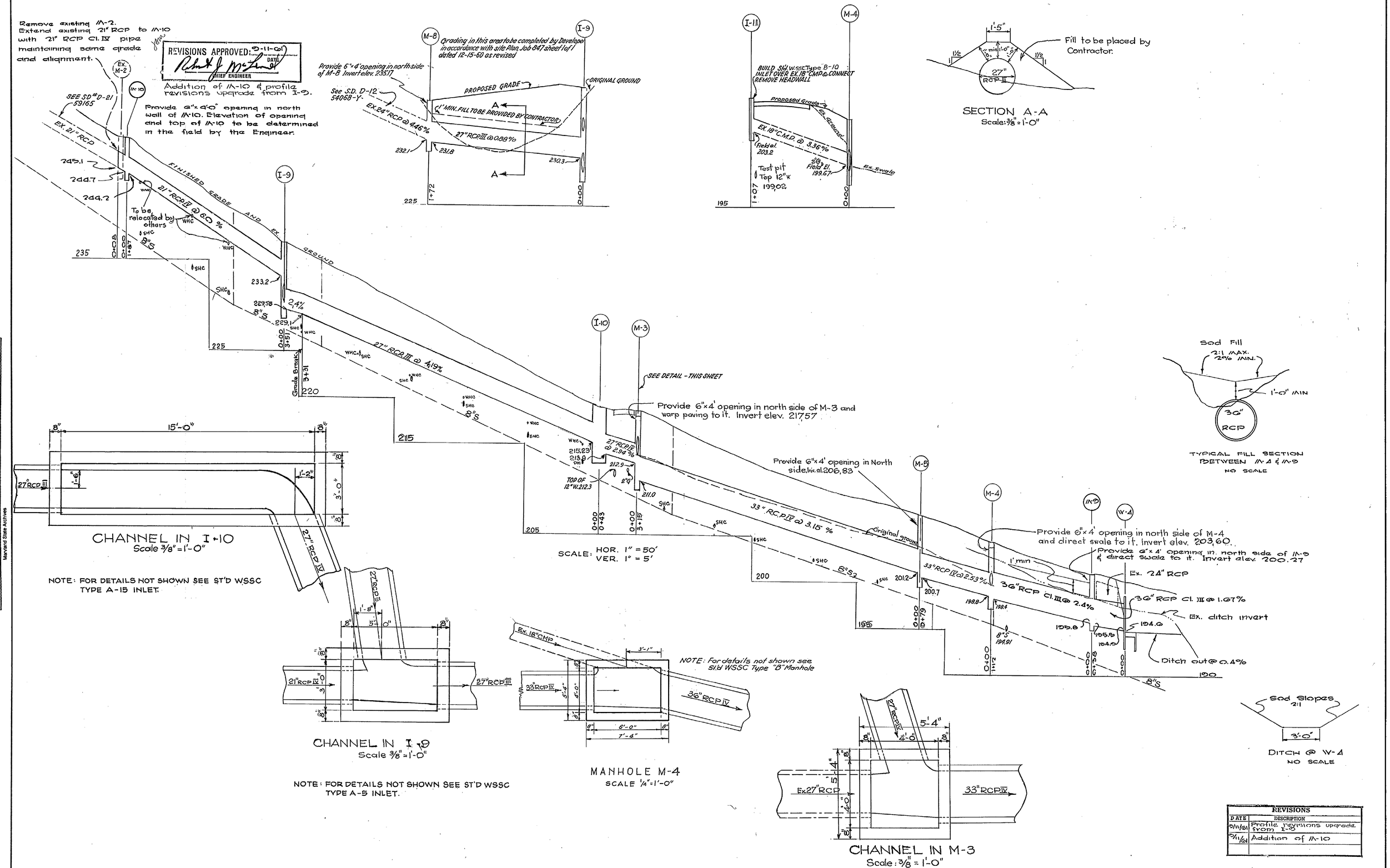

REVISIONS	
DATE	DESCRIPTION
8/11/01	Profile revisions upgrade from I-9
8/11/01	Addition of IN-10

CONTRACT No. 0187-DE

DRAWN A.Z. & T.R. / TRACED / CHECKED / EXAMINED / STARTED	WASHINGTON SUBURBAN SANITARY COMMISSION	APPROVED July 24, 1991 (DATE) CHIEF ENGINEER	AUTHOR. / JOB NO.	WATER / SANITARY SEWER / GIDES001	MADDOX & HOPKINS CIVIL ENGINEERS SILVER SPRING, MD.

CONTRACT No. 0187-DE

SITKA DISTRICT
STORM DRAIN PLAN
OAKVIEW
AVENEL ROAD

SD FILE NO. 183

DRAWING	SCALE	
NO. 2 OF 2	AS SHOWN	611268 Y

CE 487-182-2

Maryland State Archives