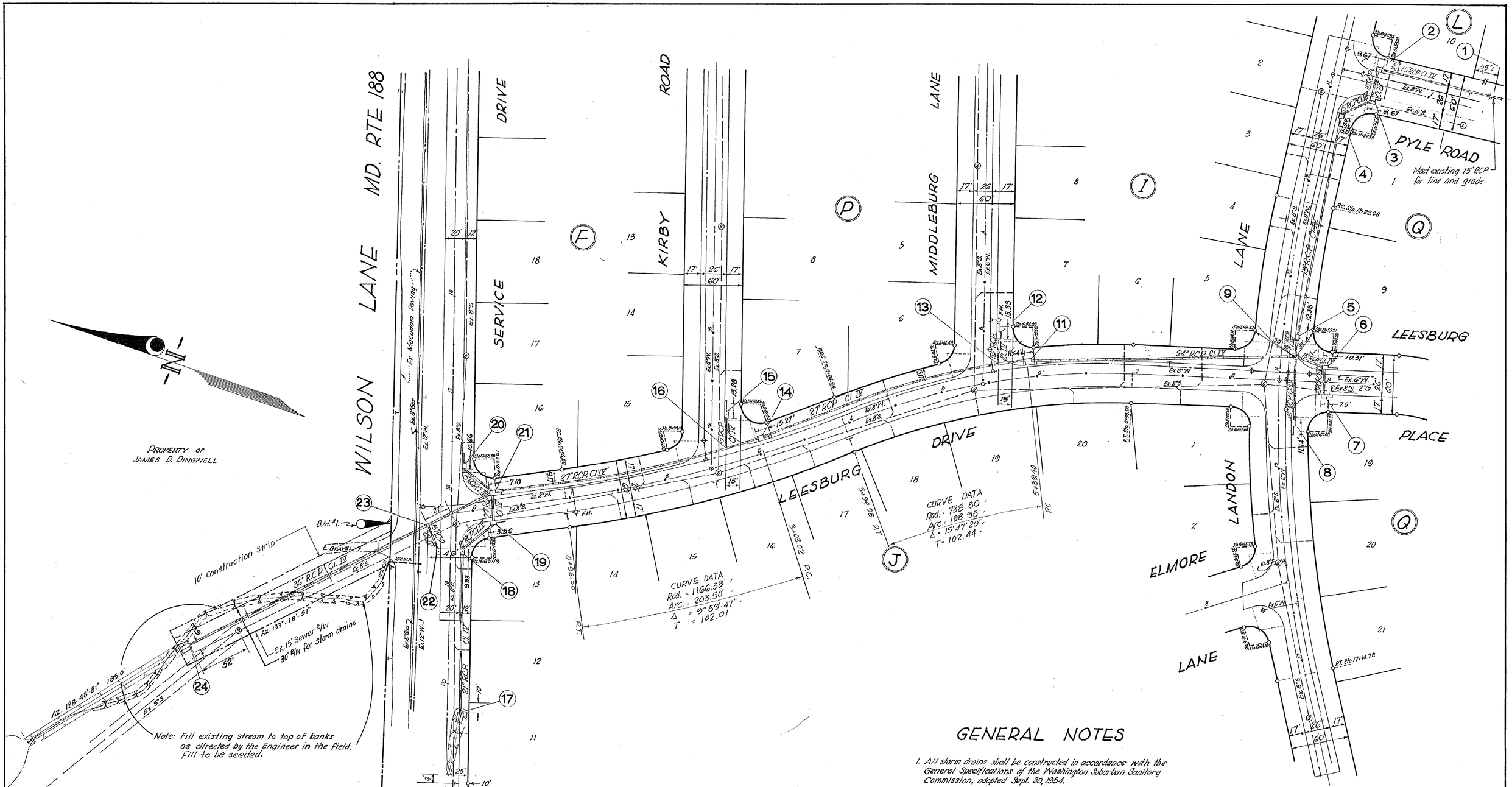

GENERAL NOTES

1. All storm drains shall be constructed in accordance with the General Specifications of the Washington Suburban Sanitary Commission, adopted Sept. 30, 1954.
2. Types of structures refer to The Washington Suburban Sanitary Commission's Standard Storm Drainage Details unless otherwise noted.
3. Information concerning underground utilities was obtained from available records, but the Contractor must determine the exact location and elevation of mains by digging test pits by hand at all utility crossings well in advance of trenching.
4. Maximum length of pipes to be laid on curves to be 8'.
5. Bench Marks.
   B.M. #1. R.R. Spike in side of C.&P. Pole #564, North side of Wilson Lane at Intersection of Leesburg Drive. El. 305.60
6. Have developer set all property pipes necessary to stakeout this construction.

EXAMINED FOR		
WATER & SEWER	[illegible]	3/28/61
R/W—REQ'D.	[illegible]	3/28/61
OTHER UTILITIES	[illegible]	3/28/61

CONTRACT 172-D

DRAWN / TRACED / CHECKED / EXAMINED / STARTED	WASHINGTON SUBURBAN SANITARY DISTRICT	APPROVED March 29, 1961 (DATE) Robert J. McLeod (CHIEF ENGINEER)	WASHINGTON SUBURBAN SANITARY COMMISSION (CHAIRMAN)	AUTHOR. / PROJECT / PART / JOB NO.	WATER / SEWER / GODWAG88	WAYNE C. GREATHOUSE & ASSOC. 2311 UNIVERSITY BLVD., WEST WHEATON, MARYLAND	CONTRACT NO. 172-D	STORM DRAIN LEESBURG DRIVE, LANDON LANE, PYLE DRIVE MIDDLEBURG DRIVE, KIRBY DRIVE, WILSON LANE OAKWOOD KNOLLS, MONTGOMERY CO.,	DRAWING NO. 1 OF 2	SCALE 1" = 50'	601806 Y

E-11 6-50 SC

CE 487-174 -1

SD FILE NO. 175

SCHEDULE

STRUCTURES					PIPES				
NUMBER	TYPE	ELEVATION		REMARKS	DIAM.	LINE	LENGTH	TYPE	CLASS
								R.C.P.	Cl. IV
2	A-5	N 343.74	S 343.87		15"	1-2	149	"	" "
3	B-10	N 343.74	S 343.97		15"	3-4	38'	"	" "
4	B-48'	℄	341.88	Std. MH	15"	4-5	229'	"	" "
5	A-5	E 332.78	N 332.68		15"	7-6	26'	"	" "
6	B-15	N 333.78	S 334.13		18"	6-9	26'	"	" "
7	B-10	N 333.78	S 334.23		15"	8-9	64'	"	" "
8	B-15	E 332.64	W 332.45		18"	5-9	17'	"	" "
9	B-48'	℄	332.60	Std. MH	24"	9-11	270	"	" "
								"	" "
11	B-10	N 321.79	S 322.20		27"	11-14	284'	"	" "
12	B-15	E 320.68	W 320.45		15"	12-13	25'	"	" "
13	F.C.	15"x 27"			27"	14-21	278'	"	" "
14	B-10	N 312.01	S 312.39		15"	15-16	31'	"	" "
15	B-15	N 311.25	W 310.92		21"	17-18	164'	"	" "
16	F.C.	15" x 27"			21"	18-19	38'	"	" "
17	CUT OFF WALL	Top	301.8	WSSC Std	27"	19-21	26'	"	" "
18	A-5	E 303.10	W 303.10		15"	20-21	36'	"	" "
19	B-15	N 303.37	S 303.67		15"	22-23	25'	"	" "
20	B-15	E 304.16	303.95		36"	21-24	348'	"	" "
21	B-10	N 303.45	S 303.65						
22	A-5	E 303.10	W 303.10						
23	F.C.	15" x 36"							
24	CUT-OFF WALL W/ FLAP GATE	Top	295.25	WSSC Std.					

TOTAL PIPE LENGTHS			
DIA.	LENGTH	TYPE	CLASS
15"	641	RCP	IV
18"	43	RCP	IV
21"	202	RCP	IV
24"	270	RCP	IV
27"	588'	RCP	IV
36"	348'	RCP	IV

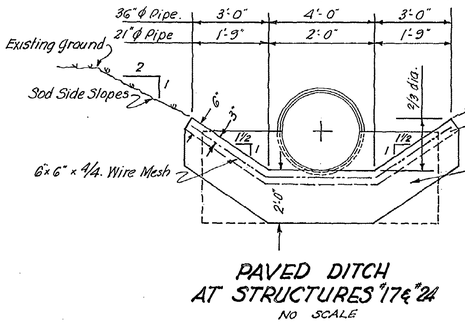

PAVED DITCH AT STRUCTURES #17 & #24
NO SCALE

Remainder of ditch to #17 and #24 to be same cross-sectional dimensions as shown above with sodded side slopes only.

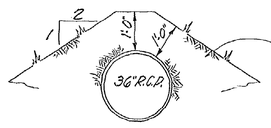

TYPICAL SECTION
No Scale

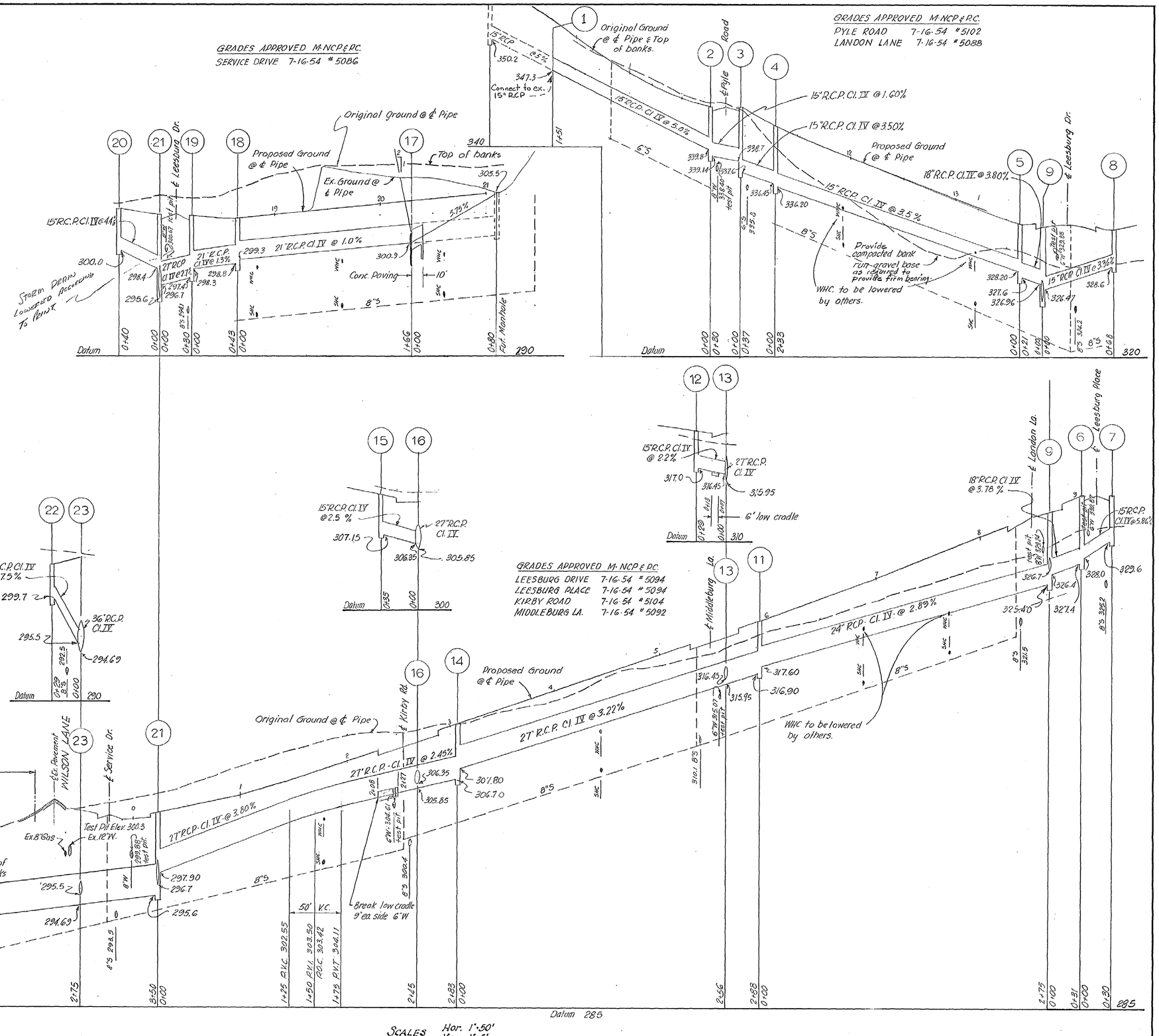

SCALES Hor. 1"=50'
Ver. 1"=5'

CONTRACT 172-D

DRAWN	WASHINGTON SUBURBAN SANITARY DISTRICT	APPROVED March 29, 1961 DATE	WASHINGTON SUBURBAN SANITARY COMMISSION		WATER	SEWER
TRACED		Robert J. McFarland CHIEF ENGINEER	CHAIRMAN	AUTHOR.		
CHECKED Mark				PROJECT		
EXAMINED				PART		
				JOB NO.	200W4628	
STARTED						

WAYNE C. GREATHOUSE & ASSOC.
2311 UNIVERSITY BLVD., WEST
WHEATON, MARYLAND

CONTRACT NO. 172-D

STORM DRAIN
LEESBURG DRIVE, LANDON LANE, PYLE DRIVE, MIDDLEBURG DRIVE, KIRBY DRIVE, WILSON LANE
OAKWOOD KNOLLS, MONTGOMERY CO.

DRAWING NO. 2 OF 2

SCALE As Shown

601807 Y

CE487-174 -2

SD FILE NO. 175

E-11 6-60 SC

Maryland State Archives