S.D. # D-21,59172K

WASHINGTON SUBURBAN SANITARY COMMISSION
* APPROVED NOV. 2, 1959
FOR STORM DRAINS ONLY
SUBJECT TO PRIOR INSTALLATION OF WATER & SEWER AND PAYMENT FOR MOVING ANY W.S.S.C STRUCTURES AFFECTED.
THE STORM DRAINAGE STRUCTURES SHOWN ON THIS PLAN ARE APPROVED AS TO DESIGN AS A COMPONENT PART OF THE STORM DRAINAGE SYSTEM FOR THIS DRAINAGE AREA. THIS COMMISSION ASSUMES NO RESPONSIBILITY WHATSOEVER FOR ANY DAMAGE WHICH MAY BE CAUSED TO ADJACENT PROPERTY OWNERS, OR TO OWNERS DOWNSTREAM, BY REASON OF THE INSTALLATION OF THE DRAINAGE STRUCTURES SHOWN HEREON.
John C. Marx
SENIOR DESIGNING ENGINEER
THE W.S.S.C. CONSTRUCTION DIVISION SHALL BE NOTIFIED THREE DAYS IN ADVANCE OF BEGINNING CONSTRUCTION.

* Subject to approval by M-N.C.P.&P.C.

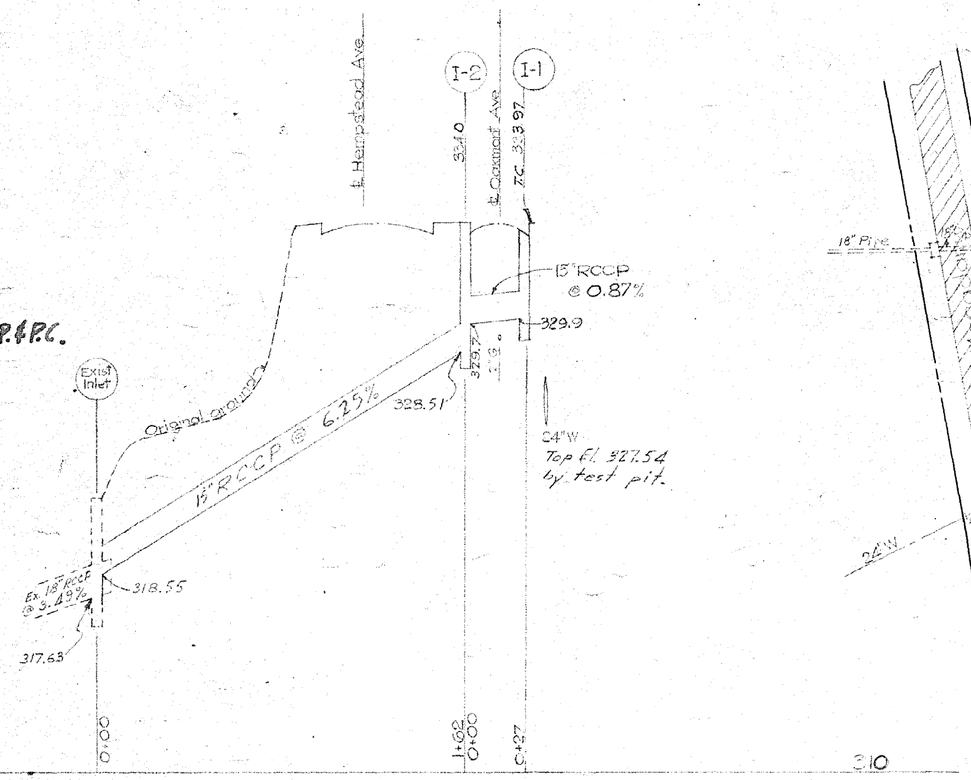

HEMPSTEAD AVE. NO 4562 3-4-56 — OAKMONT AVENUE M.N.C.P.&P.C. APPROVED PROFILE NO. 4560 3-4-58

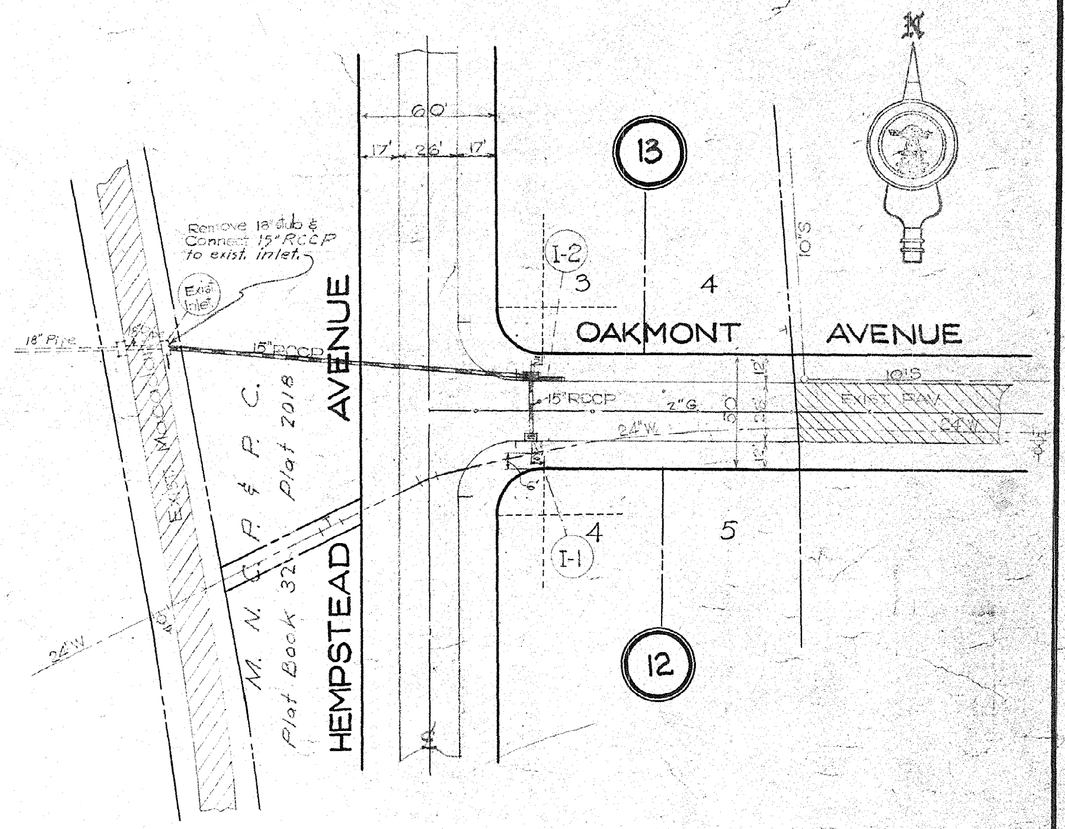

STRUCTURE SCHEDULE				PIPE SCHEDULE			
No	Type	Top El	Remarks	Dia	Line	Lgth	A.S.T.M. Design
I-1	E Comb.	333.97	C.H.S.R.C. Detail IL-5	15"	I-1 to I-2	23'	RCCP
I-2	F-1	334.0	Std. W.S.S.C. Detail	15"	I-2 to Exist. Inl.	158'	"

GENERAL NOTES

1. All storm drains shall be constructed in accordance with the General Specifications of the Washington Suburban Sanitary Commission, adopted September 30, 1954.
2. Steps shall be provided in the channels of structures involving pipes larger than 27" in accordance with the Washington Suburban Sanitary Commission's Standard Detail.
3. Types of structures refer to the Washington Suburban Sanitary Commission's Standard Storm Drainage Details unless otherwise noted.
4. Information concerning underground utilities was obtained from available records, but the Contractor must determine the exact location and elevation of the mains by digging test pits by hand at all utility crossings well in advance of trenching.

MONTGOMERY COUNTY, MARYLAND
DEPARTMENT OF PUBLIC WORKS
ROCKVILLE, MD.

CHECKED BY
FOR CODE REQ.
FOR STORM DRAINS
FOR RIGHT OF WAY
FOR UTILITIES
FOR CONTRACT

MONTGOMERY COUNTY, MARYLAND
SHEET 1 OF
PROJECT NO. ____ FILE NO. ____
RECOMMENDED FOR APPROVAL: ____ APPROVED: ____
CHIEF OF HIGHWAY ENGINEERING DIVISION — DIRECTOR, DEPARTMENT OF PUBLIC WORKS

MONTGOMERY COUNTY, MARYLAND
DEPARTMENT OF PUBLIC WORKS

FINAL APPROVAL

Date: ____
By: ____

File No. ____
Sheet 1 of 1
DEPARTMENT OF PUBLIC WORKS
PROJECT NO. 57-1002-A-B

STORM DRAIN PLAN
AYRLAWN
OAKMONT AVENUE & HEMPSTEAD AVENUE
MONTGOMERY COUNTY, MARYLAND

MADDOX & HOPKINS
CIVIL ENGINEERS
SILVER SPRING, MD.

Scale: 1" = 50'
Date: August 23, 1956
Design: A. Zogaris
Drawn: A. Zogaris

9947

CE487-116-1

SD FILE NO. 117

Maryland State Archives

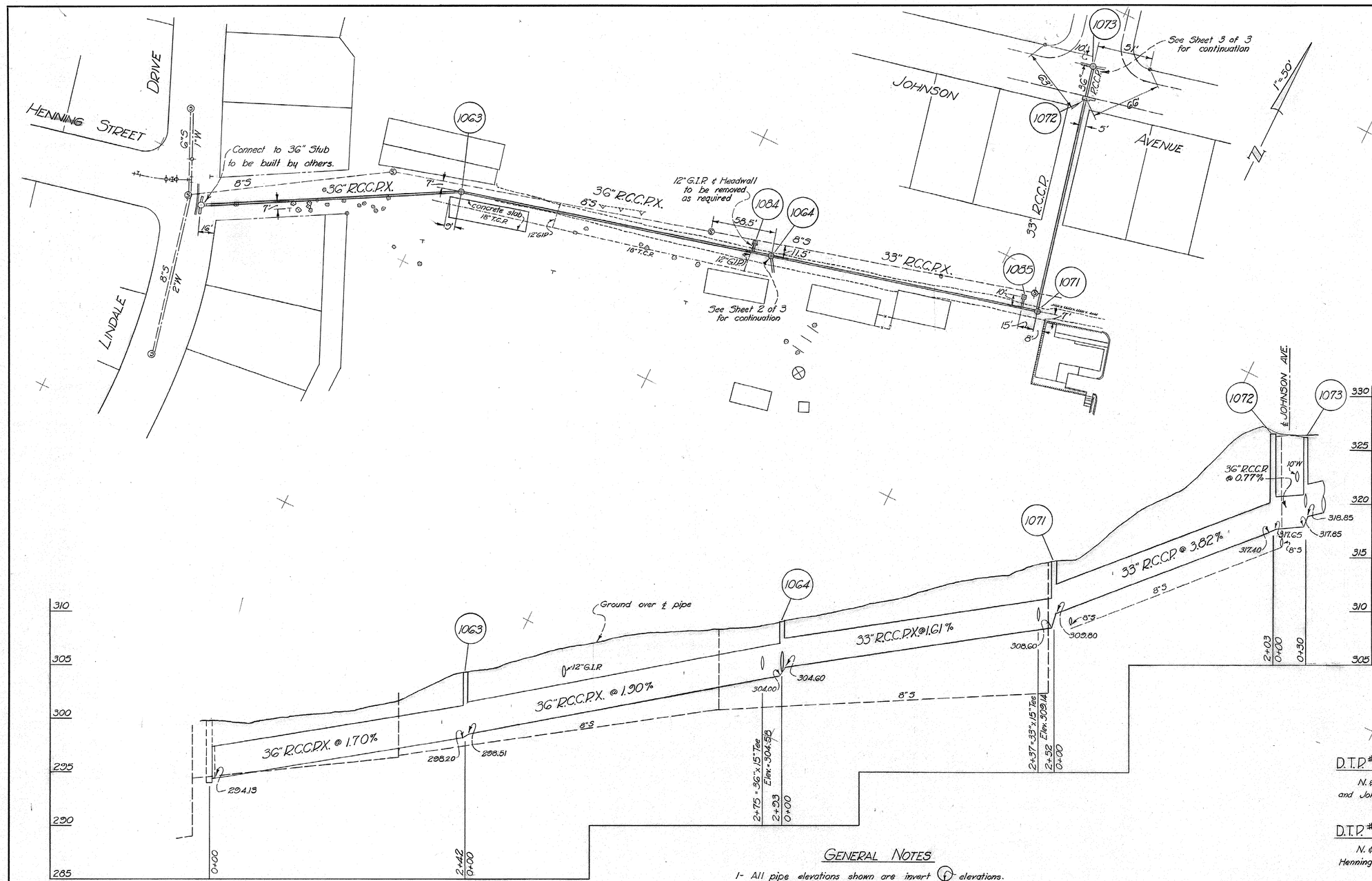

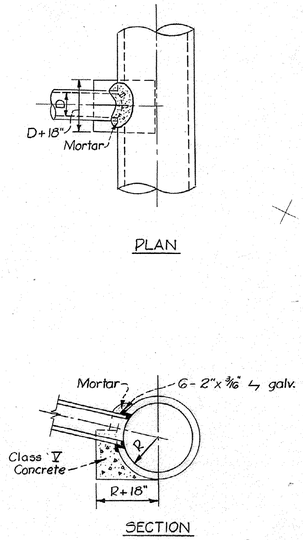

STANDARD TEE
No Scale

D.T.P.# 15431 ELEV. 315.14

N. & W. in S. side Pole # none @ NW corner Lindale Dr. and Johnson Ave.

D.T.P.# 17212 ELEV. 301.83

N. & W. in NW side Pepco Pole # 633764 @ NE corner Henning St. and Lindale Dr.

GENERAL NOTES

1- All pipe elevations shown are invert (f) elevations.
2- Top elevations of structures may be adjusted in the field to meet existing conditions.
3- Test pits shall be dug in advance of trench excavation to determine the location of crossing mains.
4- Cost of restoring surface of roadway through Recreation Center to be included in price bid for excavation and refill for pipe sizes involved.
5- All ground shall be restored to its original condition. Where noted, areas now in grass shall be resodded. Any other areas in grass, where the surface has been rutted, disturbed or covered by earth due to the Contractor's operations shall be levelled, smoothed and seeded, at no additional cost, to the satisfaction of the Engineer.

STRUCTURE SCHEDULE

Number	Manhole Type	Inlet Type	Top Elevation	Remarks
1063	B		304.25	48"
1064	B		308.96	48"
1071	B		314.65	48"
1072		B-1	326.52	
1073	B		326.20	48"
1084		D	307.45	Invert Elev. 15" Outlet = 304.70
1085		D	313.50	Invert Elev. 15" Outlet = 310.00

Released 11/20/51

CONT. 57-D

DRAWN JAM / TRACED / CHECKED / EXAMINED / STARTED 1-25-51	WASHINGTON SUBURBAN SANITARY DISTRICT	APPROVED April 26, 1951 (DATE) Harry R. Hall (CHIEF ENGINEER)	WASHINGTON SUBURBAN SANITARY COMMISSION (CHAIRMAN)	WATER / SEWER: AUTHOR. / PROJECT / PART / JOB NO. 51D002	CONTRACT 57-D	PLAN & PROFILE	ALTA VISTA DISTRICT STORM DRAIN THROUGH NORTH BETHESDA RECREATION CENTER AYRLAWN	DRAWING NO. 1 OF 3	SCALE Hor. 1"=50' Vert. 1"=5'

211NW6 51059 Y 21NW11-1&2 22NW11-4

E-11 6-50 SC

CE487-116-2

SD FILE NO. 117

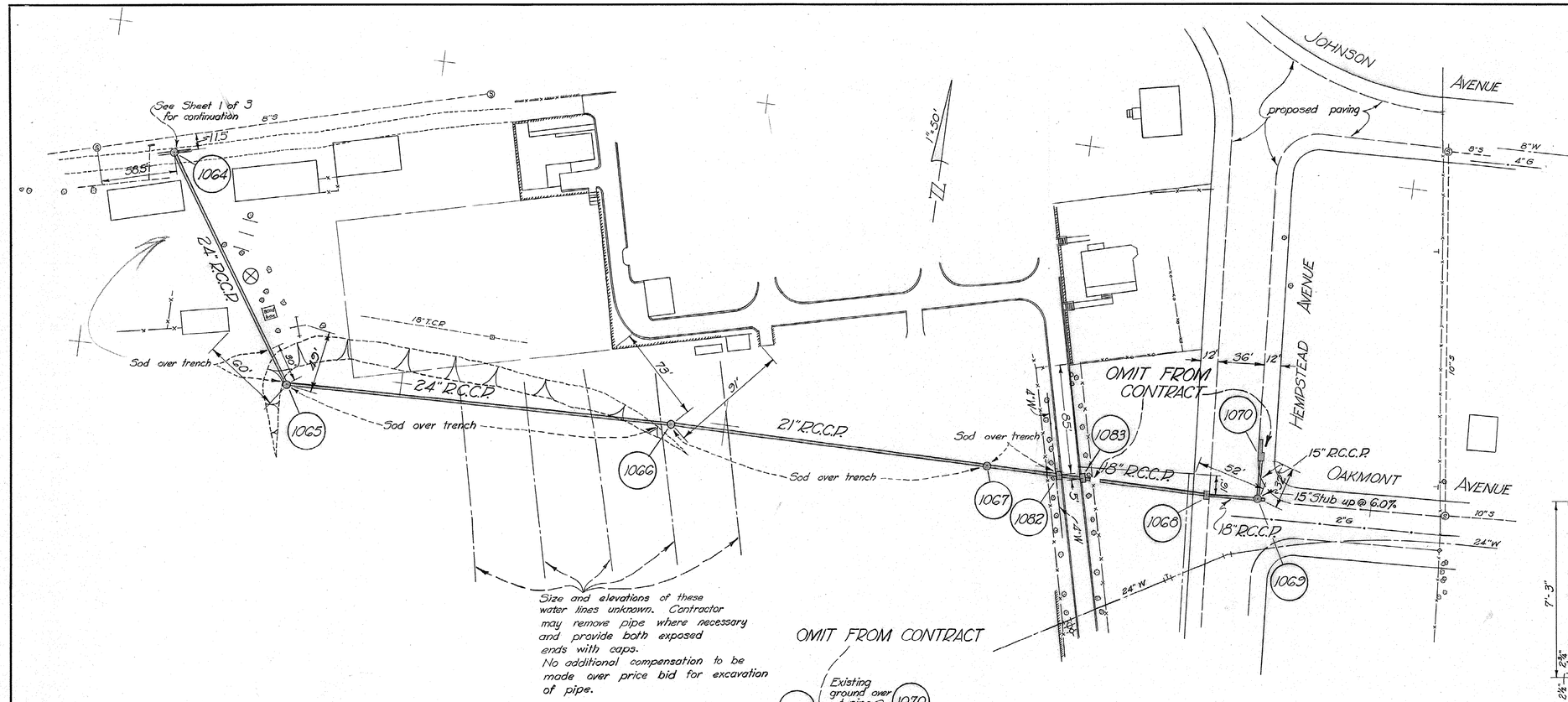

STRUCTURE SCHEDULE				
Number	Manhole Type	Inlet Type	Top Elevation	Remarks
1064	B		308.96	48"
1065	B		314.15	48"
1066	B		315.10	48" - Slotted Manhole Cover
1067	B		320.30	48"
omit 1068		A-1		
omit 1069	B			48"
omit 1070		Special		See detail - sheet 3 of 3
1082		A-1	322.65	
1083		A-1	322.70	Leave 16" stub to East

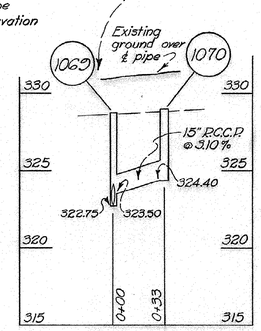

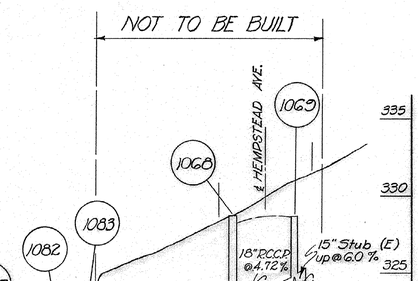

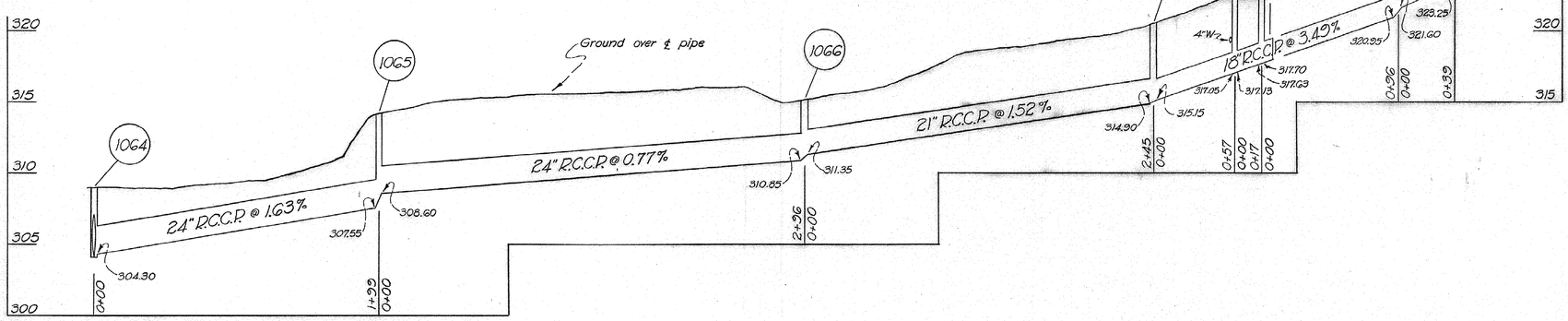

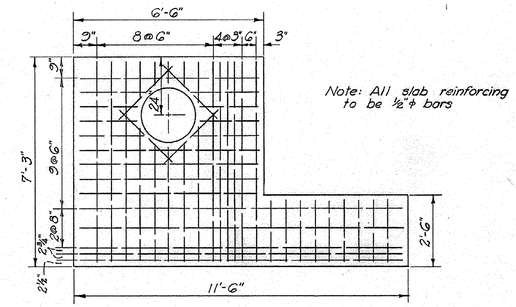

SLAB

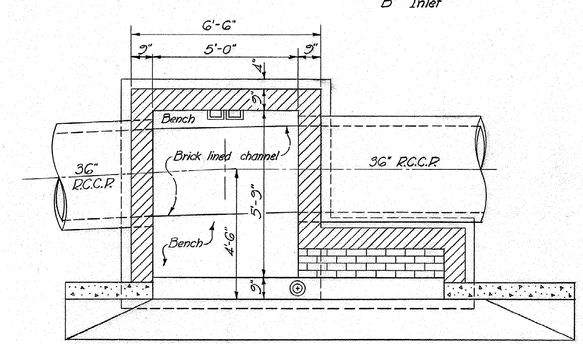

PLAN
(Slab removed)

DETAIL - SPECIAL INLET 1074
Scale: 3/8" = 1'-0"

CONT. 57-D

DRAWN / TRACED / CHECKED / EXAMINED / STARTED 1-26-51	WASHINGTON SUBURBAN SANITARY DISTRICT	APPROVED April 26, 1951 (DATE) — CHIEF ENGINEER	WASHINGTON SUBURBAN SANITARY COMMISSION — CHAIRMAN	AUTHOR. / PROJECT / PART / JOB NO. 51D002 (WATER, SEWER)	CONTRACT 57-D x	PLAN & PROFILE

ALTA VISTA DISTRICT
STORM DRAIN
THROUGH NORTH BETHESDA RECREATION CENTER
AYRLAWN

DRAWING NO. 2 OF 3

SCALE Hor. 1" = 50' Vert. 1" = 5'

211NW6 / 51060 / Y / 211NW11-2

E-11 6-50 SC

CE487 - 116 - 3

SD FILE NO. 117

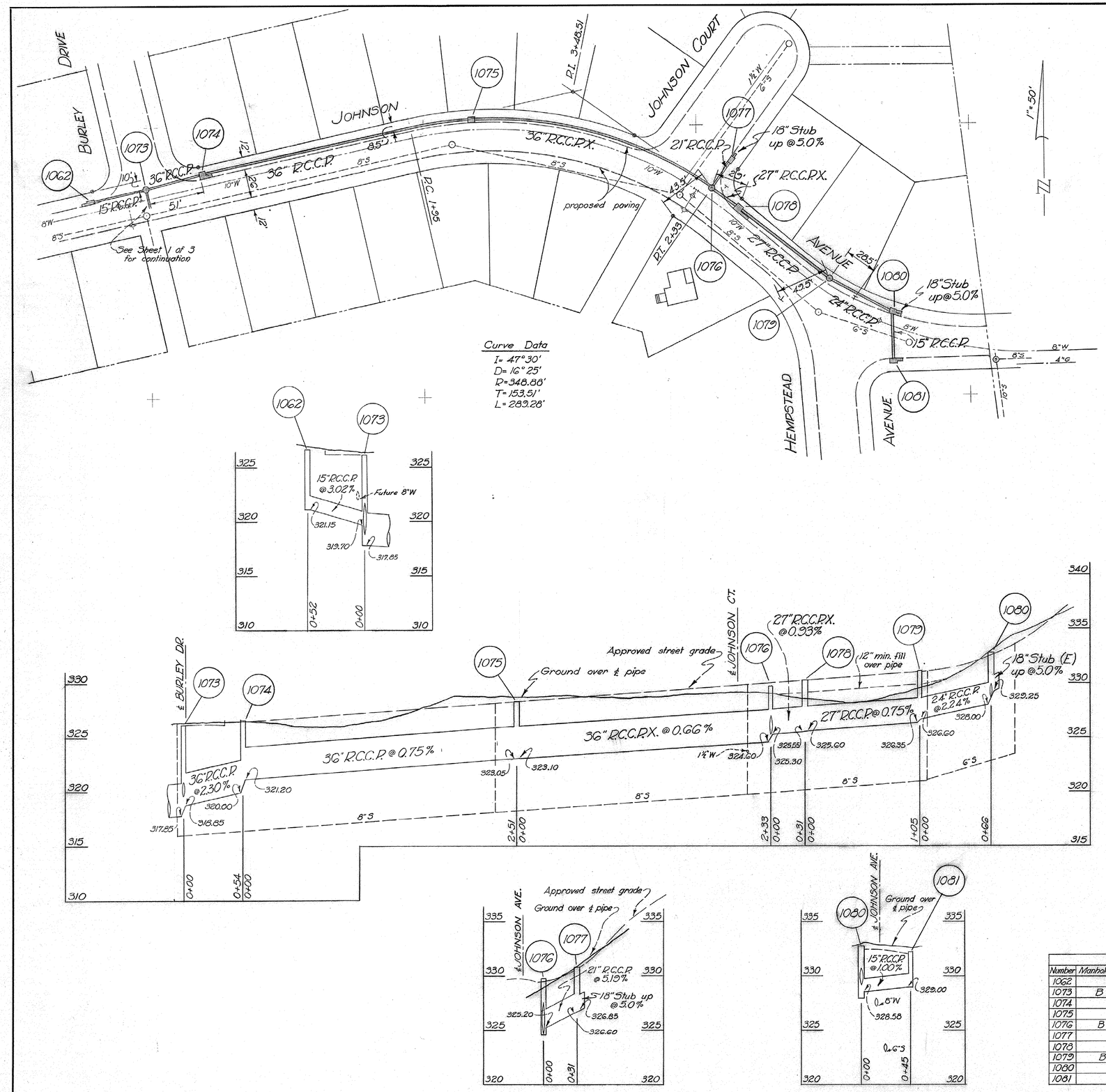

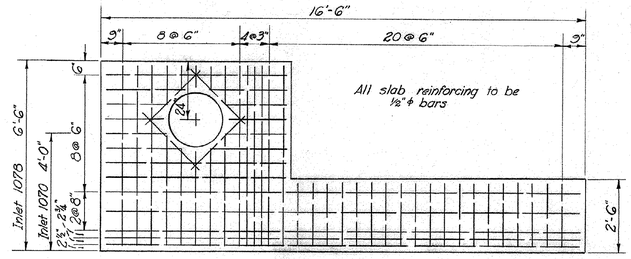

SLAB

Note: All details not shown to be similar to W.S.S.C. Standard Type "B" Inlet

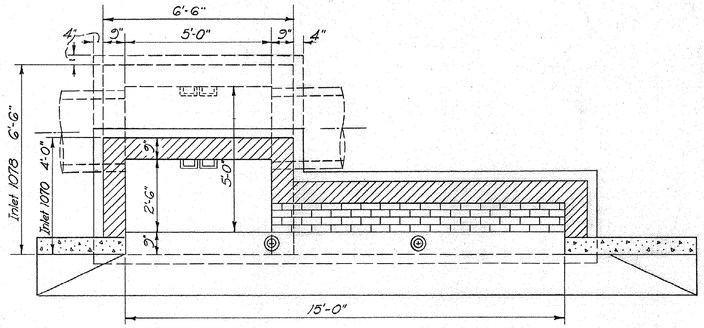

PLAN
(Slab removed)

DETAIL - SPECIAL INLETS 1070 & 1078
Scale: ⅜" = 1'-0"

D.T.P.# 12723 ELEV. 322.30

"x" cut on bonnet bolt of F.H. in grounds of Ayrlawn Farms Dairy, on N. side macadam drive, on N. side of buildings, 350'± W. of W. end of Johnson Ave.

D.T.P.# 17215 ELEV. 329.29

R.R. Spike in N.E. side Pepco Pole #632110 on N.E. corner intersection of Johnson Ave. & Johnson Court

STRUCTURE SCHEDULE				
Number	Manhole Type	Inlet Type	Top Elevation	Remarks
1062		B-1	326.65	
1073	B		326.20	48"
1074		Special	326.41	See detail - sheet 2 of 3
1075		A-2	328.39	
1076	B		329.85	48"
1077		A-1	330.54	
1078		Special	330.27	See detail - this sheet
1079	B		331.10	48"
1080		B-2	332.70	
1081		B-1	332.30	

CONT. 57-D

DRAWN / TRACED / CHECKED / EXAMINED / STARTED	WASHINGTON SUBURBAN SANITARY DISTRICT	APPROVED April 26, 1951 (DATE) CHIEF ENGINEER	WASHINGTON SUBURBAN SANITARY COMMISSION CHAIRMAN	WATER / SEWER: AUTHOR. / PROJECT / PART / JOB NO. 51D002	CONTRACT 57-D	PLAN & PROFILE	ALTA VISTA DISTRICT STORM DRAIN JOHNSON AVE. ~ BURLEY DR. to HEMPSTEAD AVE. AYRLAWN	DRAWING NO. 3 OF 3 / SCALE Hor. 1"=50' Vert. 1"=5' / 211NW6 51061 Y 22NW11-4

CE 487-116-4

SD FILE NO. 117