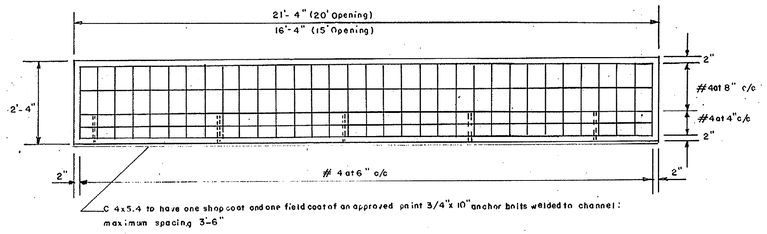

TOP SLAB
(Plan)

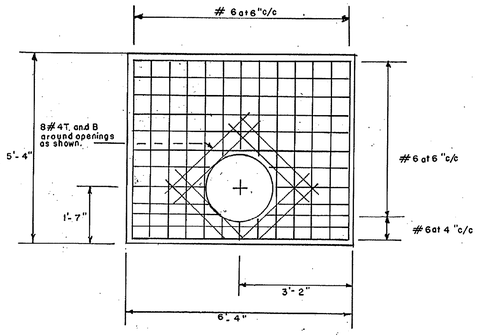

STREET SLAB

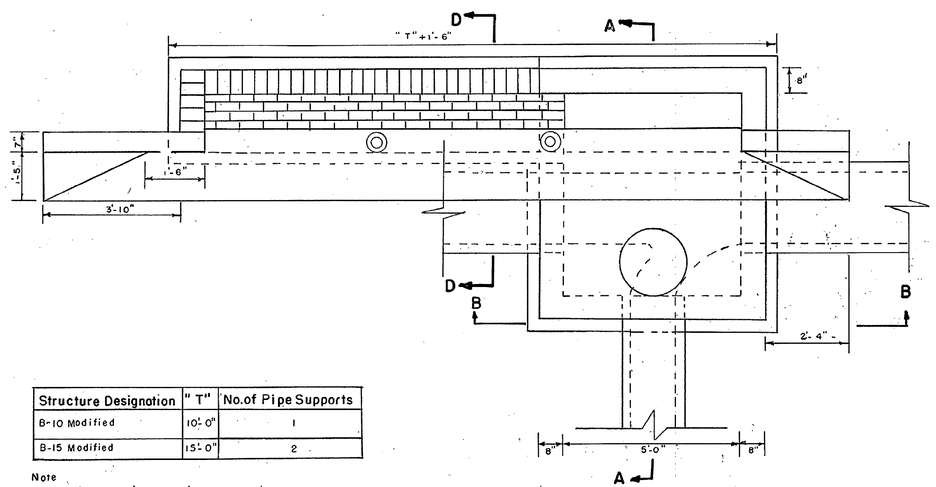

PLAN BELOW TOP SLAB

Structure Designation	"T"	No.of Pipe Supports
B-10 Modified	10'-0"	1
B-15 Modified	15'-0"	2

Note
Manhole frame and cover not shown

GENERAL NOTES

1. Loading AASHTO HS 20-44
2. Concrete Concrete shall be Mix No.2 having a minimum compressive strength of 3000 Psi at 28 days
3. Reinforcing steel Reinforcing steel for concrete shall conform to AASHTO designation: M31 (ASTM A615) grade 40. All splices shall be lapped a minimum of 24 bar diameters unless otherwise noted. Minimum cover for reinforcing bars shall be 2" unless otherwise noted.
4. Brick Brick shall conform to the specification for sewer brick AASHTO designation: M91 (ASTM c 32 grade SA.
5. For TYPE A-SPECIAL INLET use portion defined by SECTION A-A only. Modify as necessary.
6. For treatment of the channel, steps and other associated details, refer to the Standard Storm Drainage Details of the W.S.S.C.
7. Contractor's option Special inlet walls, may be constructed of brick subject to the following:
   a. 8" thick walls for the first 5'-0" of depth.
   b. 12" thick walls between 5'-0" and 11'-0" of depth.
   c. 16" thick walls for depths greater than 11'-0".
   d. Depth will be measured from top of curb to invert of outgoing pipe.

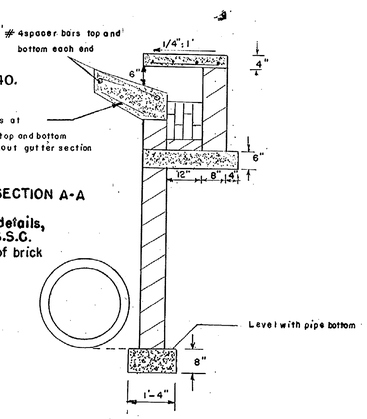

SECTION D-D

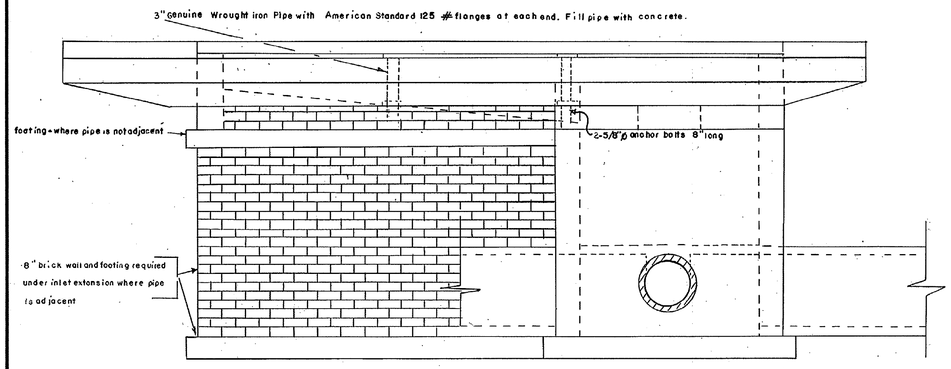

SECTION B-B

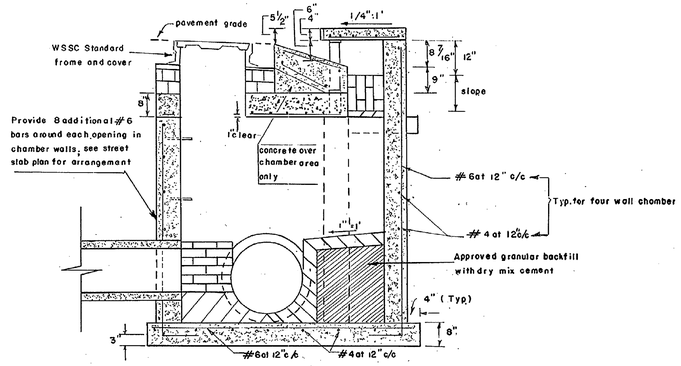

SECTION A-A

W.S.S.C. P.N. 76041
FOR WORK IN PUBLIC SPACE SUBJECT TO PRIOR INSTALLATION OF WATER & SEWER AND PAYMENT FOR MOVING ANY W.S.S.C. STRUCTURES AFFECTED.

FOR LOCATION OF UTILITIES
CALL 24 HOURS A DAY 559-0100
48 HOURS IN ADVANCE OF ANY WORK IN THIS VICINITY

NUMBER	REVISION	DATE

DES. H.G. & C.M.O.
DR. R.H.J.
CHK.
REVISIONS

MONTGOMERY COUNTY MARYLAND
DEPARTMENT OF TRANSPORTATION
ROCKVILLE, MD.

Storm Drains
MELBOURNE AVE
Sligo Park Hills
December, 1975 scale: 1"=2'

APPROVED 3-15-76
CHIEF, DIV. OF TRANS. ENG'G. — DIRECTOR, DEPT. OF TRANS.

PROJECT: 768975 DWG 2 OF 2

SD FILE NO. 63

CE 487-62 -1

Maryland State Archives

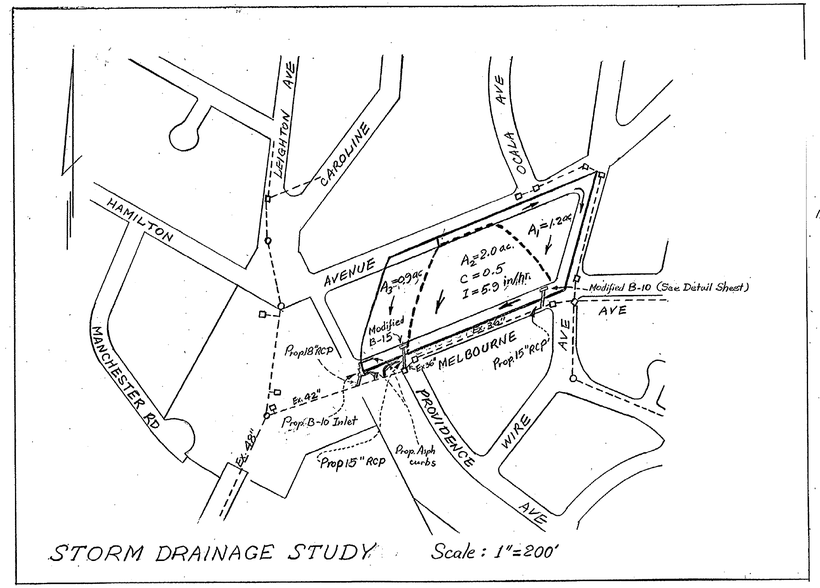

STORM DRAINAGE STUDY Scale : 1"=200'

NOTE:
As built top of structure and pipe inv. elevations shown ( ) and [ ] respectively.

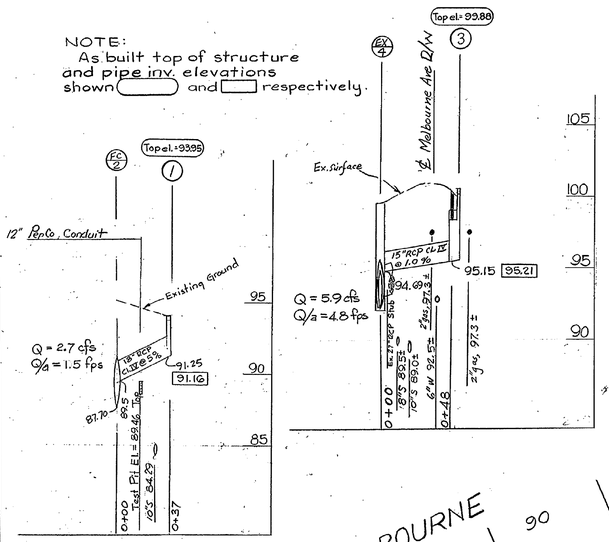

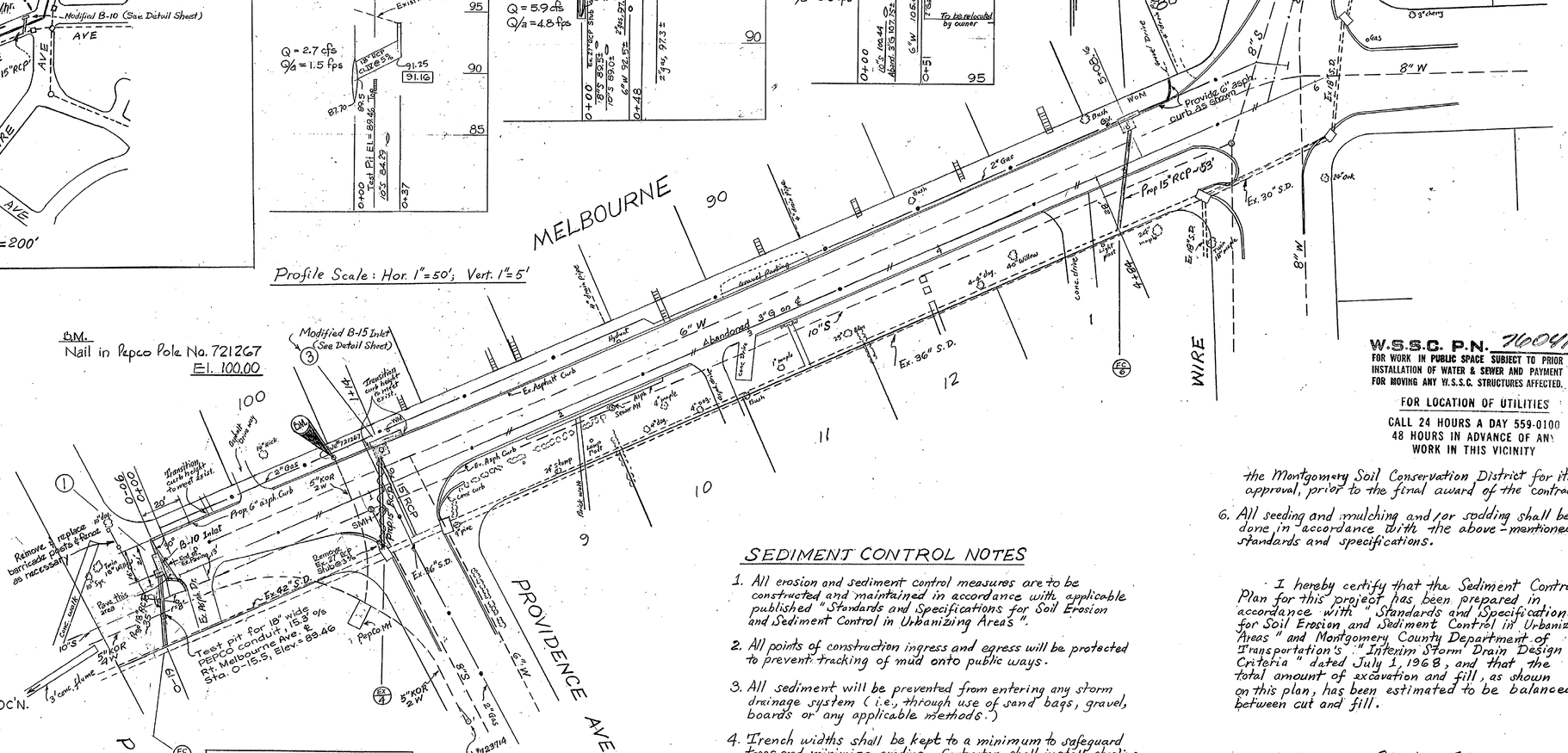

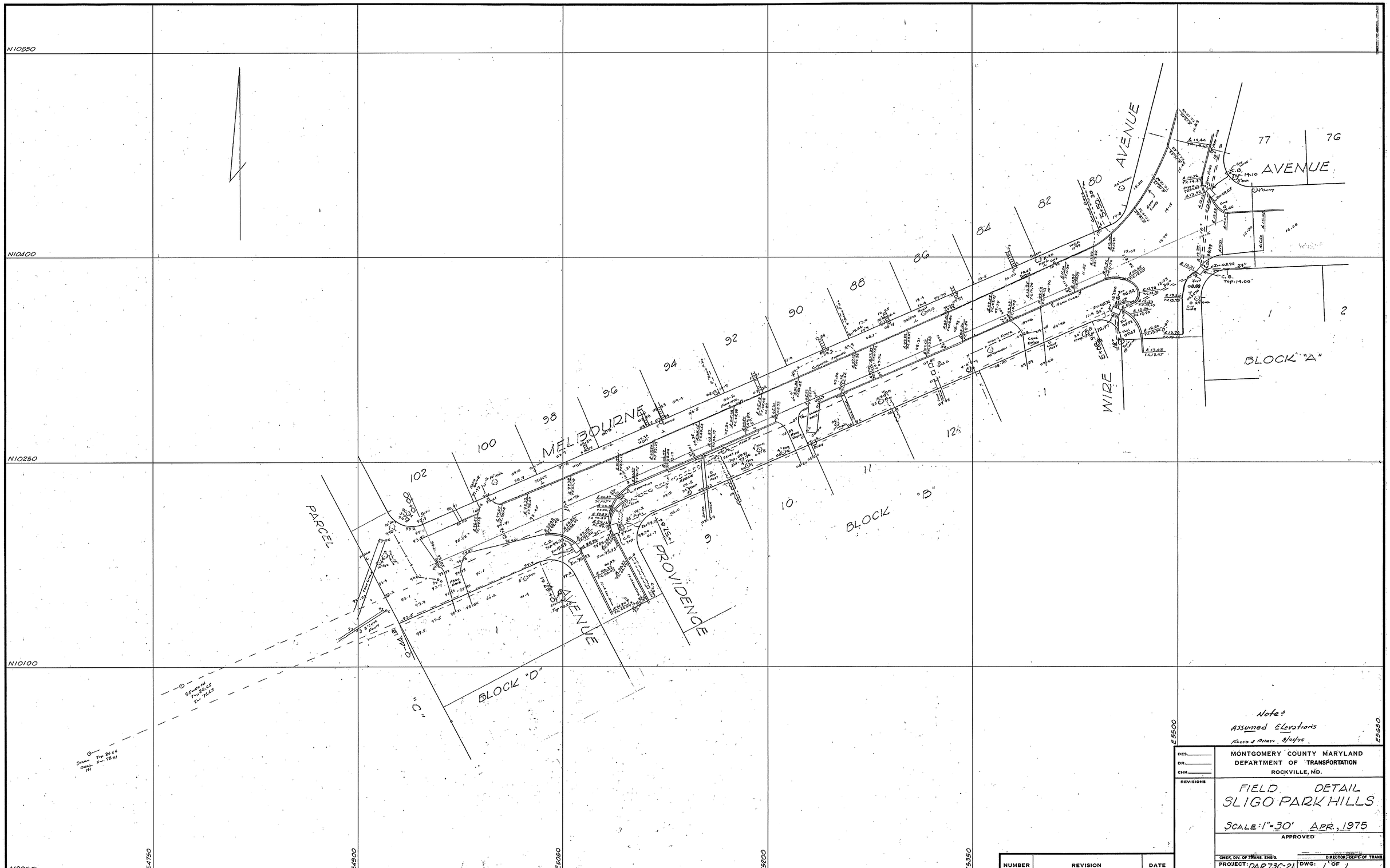

Note:
Assumed Elevations
Floyd J Pilatty 8/24/75

NUMBER	REVISION	DATE

DES.
DR.
CHK.
REVISIONS

MONTGOMERY COUNTY MARYLAND
DEPARTMENT OF TRANSPORTATION
ROCKVILLE, MD.

FIELD DETAIL
SLIGO PARK HILLS

SCALE: 1"=30' APR., 1975

APPROVED

CHIEF, DIV. OF TRANS. ENG'G. DIRECTOR, DEPT. OF TRANS.

PROJECT: DAR73C-21 DWG: 1 OF 1

SD FILE NO. 63

CE 487-62-3