CONTRACT No. 688343-B

This contract includes two lines, namely Alternates No.1 and 3; their limits are shown hereon and described below.

Alternate No.1 comprises the system upgrade from an 18" stub at Str.#5 into existing Str.# 2

Alternate No.3 comprises the system at the intersection of Iroquois and Winnebago Roads, namely Str.# 34 through 38, all connecting pipe and outfall riprap.

LEGEND

- Drainage Divide
- Area in Acres
- C = 0.50

SEDIMENT CONTROL NOTES

1. All erosion and sediment control measures are to be constructed and maintained in accordance with applicable published "Standards and Specifications for Soil Erosion and Sediment Control in Urbanizing Areas".
2. All points of construction ingress and egress will be protected to prevent tracking of mud onto public ways.
3. All sediment will be prevented from entering any storm drainage system (i.e., through use of sand bags, gravel, boards or other applicable method.)
4. Trench widths shall be kept to a minimum to safeguard trees and minimize grading. Contractor shall install sheeting and shoring as dictated by safety requirements; 50' max. length of excavated trench to be left open at any one time.
5. Approval of the sediment control plan for this project is conditional upon the approval of a sediment control plan for off-site waste and/or borrow areas. Though no waste or borrow is anticipated contractor must submit the plan(s) approved by the Sediment Control Section, Department of Environmental Protection, for conformance to the Sediment Control Ordinance, Chapter 83A, Montgomery County Code 1965, as amended, for all off-site waste or borrow areas should the need arise.
6. All seeding & mulching and/or sodding shall be done in accordance with the above-mentioned standards and specifications.

BUILDER'S CERTIFICATE

I hereby certify that all clearing, grading construction and/or development will be done pursuant to this plan.

SEPT. 22, 1972 — DATE

R. J. LYNCH, ACTING DIRECTOR, DEPT. OF PUBLIC WORKS

I hereby certify that the Sediment Control Plan for this project has been prepared in accordance with "Standards and Specifications for Soil Erosion and Sediment Control in Urbanizing Areas" and Montgomery County Department of Public Works "Interim Storm Drain Design Criteria" dated July 1, 1968, and that the total amount of excavation and fill shown on these plans has been computed to be balanced between cut and fill.

Sept 21, 1972 — DATE

CHARLES EMIL OPENSTEIN, P.L.S. MD. NO. 6917

Reviewed for Montgomery S.C.D. Name
and meets Technical Requirements
Signature Date 10-26-72
U.S. Soil Conservation Service

APPROVED FOR SEDIMENT CONTROL BY MONTGOMERY SOIL CONSERVATION DISTRICT.
SUPERVISOR — DATE 10-27-72.

W.S.S.C. P.N. FOR WORK IN PUBLIC SPACE SUBJECT TO PRIOR INSTALLATION OF WATER & SEWER AND PAYMENT FOR MOVING ANY W.S.S.C. STRUCTURES AFFECTED.

STATE OF MARYLAND — A. MARIO LOSCALZO — No. 6081 — REGISTERED PROFESSIONAL ENGINEER

	DATE	REVISIONS
Drafting	2-16-72	By M.C.D.P.W for Contract Offer.
Check	9-21-72	Misc. pipe & structures - MCDPW Rev.
Design		
Check		

MCA
MATZ, CHILDS & ASSOCIATES OF ROCKVILLE
CONSULTING ENGINEERS
322 NORTH STONESTREET AVENUE ROCKVILLE, MARYLAND 20850
TELEPHONE 762-5533 AREA CODE 301

PROJECT: 68 SDG36
CONTRACT # 688343-B

DRAINAGE AREA MAP

GLEN ECHO HEIGHTS
BETHESDA DISTRICT
MONTGOMERY CO., MARYLAND

Sheet 1 of 9

DATE July, 1970

SCALE As Shown

JOB NUMBER 69-054

CE 487-56-1

SD FILE NO. 57

Maryland State Archives

NOTE: Utilities shown hereon are taken from available records. These records are not necessarily complete or accurate.

GENERAL NOTES

1. Top elevations of structures shall be adjusted in the field to meet existing conditions.
2. Information concerning underground utilities was obtained from available records, but the Contractor must determine the exact location & elevations of the utilities by digging test pits, by hand, at all utility crossings well in advance of trenching.
3. Repairs to utilities or private property damaged as a result of the Contractor's negligence or method of operation must be made at his own expense.
4. All pipe elevations shown are invert elevations.
5. All concrete shall be class A-1 unless otherwise shown.
6. Grading shall be done in such a manner as to provide positive drainage. All disturbed areas on private property and on all other disturbed areas 3:1 or steeper shall be sodded. All other areas shall be seeded and mulched unless otherwise specified or directed by the Engineer. Fill shall be provided in the existing streams to the limits shown.
7. All trees and shrubs within the storm drain rights-of-way on private property shall be removed and transplanted or replaced with trees or shrubs of equal size and quality at locations indicated by the property owners or as directed by the Engineer.
8. If existing drains other than those shown are discovered during construction, they shall be connected to the storm drain as directed by the Engineer.
9. All workmanship and material shall conform with applicable portions of the Standard Specifications of the Washington Suburban Sanitary Commission, Montgomery County Department of Public Works and the Maryland State Highway Administration.
10. See sheet 7 of 9 for Pipe Schedule & Structure Schedule.
11. Encase in Concrete under structure and for 5' on each side.
12. Maintain 6" vertical clearance with water and/or sewer. Also, maintain 5' horizontal clearance with water and/or sewer. Water or sewer may have to be lowered. Clearances shown are minimal.

TUSCARAWAS RD.

WALHONDING RD.

WISSIOMING RD.

JAMES R. WEAR PROPERTY

See Sheet 8 of 9 for Profile.

Brick shut Exist. Twin 18" TC pipe

Asphalt Paving

Construct Asphalt Curb & Channel

5.0" RCP

Brick Box Culvert

Limit of Grading

Extend 6" pipe drain to RC 0118

1 Sty. House #23801

Construct Conc. Wall Top Elev. 120.0

Ex. Ash Rail

Limit of Grading

Asph. Pave

Conc.

Shed

Telephone Cable Box

Scale: 1"=30'

See Match Line "A"-"A" - Sheet 3

See Match Line "B"-"B" - Sheet 3

See Match Line "D"-"D" - Sheet 4

WANETA ROAD

WALHONDING RD.

TUSCARAWAS RD.

WISSIOMING RD.

IROQUOIS RD.

WINNEBAGO RD.

Reinforced Conc. Paving

SEE NOTE #12

Provide 10 LF Bitum. curb both ends of inlet

Remove ex. endwall

Fill & Sod eroded area and construct berm to direct flow to

Keep pipe open slope fill up @ 5:1 from invert

Curve #4 Data
℄ R = 300.00'
Δ = 7°39'50"
T = 20.09'
A = 40.18'

Curve #5 Data
℄ R = 175.00'
Δ = 17°47'20"
T = 27.38'
A = 54.33

M. I. Malone

Note: These lines used as base lines for layout dimensions
Jerry O. Nichols

Tree Treatment "E"

Finish other half of well. Include weep holes & fill with #2 stone (max. size) to level of fin. grade at pipe.

Curve #1 Data
℄ R = 300.00'
Δ = 4°46'12"
T = 12.45'
A = 25.00'

Curve #2 Data
℄ R = 300.00
Δ = 8°12'45"
T = 21.54
A = 43.00'

Curve #3 Data
℄ R = 309.61'
Δ = 23°30'00"
T = 64.40
A = 126.99

Remove Ex. Pipe & Endwalls

Remove ex. endwall and abandon Ex. Pipes

Fill ex. ditch

New Bitum. Curb

Rebuild Ex. A-5 Inlet to WSSC Std. 8-15

SEE NOTES #11 #12

Fill Ex. Ditch

Placed Rock in outfall channel as reworked rip-rap. Rock used shall meet MSHA Specs, Class II Heavy Rip Rap

Conn. to 66 RCP

Tree Treatment "E"
Any Forsythia, or Azalea bushes that will be affected by construction.

Tree Treatment "B" & Fill Ex. Ditch

Remove Ex. 27" RCP

20 L.F. Dumped Rip Rap Rock used shall meet MSHA Specs, Mod. rip-rap

Remove Ex. S.D.

Extend Curb

Ex. Conc. Drive

Ex. Mac. Paving

Cone Steps

Ex. 2" Gas.

Ex. 4.5' Above Surface

Ex. 8" S.

Ex. 8" W.

Ex. 27" RCP

Ex. 42" RCP

Ex. 36" RCP

Ex. 24" RCP

Ex. 18" RCP

Ex. 15" RCP

Ex. 10" RCP

Ex. 8" RCP

Ex. 6" RCP

Ex. 4" RCP

Ex. 2" RCP

Ex. 8" CMP

Ex. 6" CMP

Ex. 4" CMP

Ex. 2" CMP

Ex. 8" VCP

Ex. 6" VCP

Ex. 4" VCP

Ex. 2" VCP

Ex. 8" CIP

Ex. 6" CIP

Ex. 4" CIP

Ex. 2" CIP

Ex. 8" CI

Ex. 6" CI

Ex. 4" CI

Ex. 2" CI

Ex. 8" CMP

Ex. 6" CMP

Ex. 4" CMP

Ex. 2" CMP

Ex. 8" VCP

Ex. 6" VCP

Ex. 4" VCP

Ex. 2" VCP

Ex. 8" CIP

Ex. 6" CIP

Ex. 4" CIP

Ex. 2" CIP

Ex. 8" CI

Ex. 6" CI

Ex. 4" CI

Ex. 2" CI

BORING	REMARKS
#1	0'-1.5' Old Fill, 1.5' Rock
#2	0'-1.5' Old Fill, 1.5'-2.5' Sandy Silt 2.5' Rock
#3	0'-1.5' Old Fill, 1.5'-2.5' Sandy Silt 2.5' Rock
#4	0'-0.5' Old Fill, 0.5'-1.5' Sandy Silt 1.5' Rock

NOTE: Old Fill composed of bricks, gravel, stone and some top soil.

5.0' RCP

6.0'

42" RCP

NOTE
For details not shown refer to WSSC Std. M1 Type "B"

STRUCTURE #67-A

SCALE: 1/4" = 1'

W.S.S.C. P.N. [illegible]
FOR WORK IN PUBLIC SPACE, SUBJECT TO PRIOR INSTALLATION OF WATER & SEWER AND PAYMENT FOR MOVING ANY W.S.S.C. STRUCTURES AFFECTED.

STATE OF MARYLAND — DONALD LORENZ — No. 7820 — REGISTERED PROFESSIONAL ENGINEER

Drafting DT	DATE	REVISIONS
Check RC.	2-16-72	By M.C.D.P.W. for Contract F-1-(1)
Design RC	9-21-72	Misc. pipes & structures by MCDPW RC
Check DC.		

MCA
MATZ, CHILDS & ASSOCIATES OF ROCKVILLE
CONSULTING ENGINEERS
322 NORTH STONESTREET AVENUE ROCKVILLE, MARYLAND 20850
TELEPHONE 762-5533 AREA CODE 301

MONTGOMERY COUNTY DEPARTMENT OF PUBLIC WORKS

APPROVED Sept 22, 1972
E. James Sayer, CHIEF - BUR. OF ENG'G. — Albert J. Ryan, ACT. DIRECTOR, DEPT. OF PUB. WKS.
PROJECT: 68 SD 936

STORM DRAINS

GLEN ECHO HEIGHTS
BETHESDA DISTRICT
MONTGOMERY CO., MARYLAND

Sheet 2 of 9 | DATE March, 1970 | SCALE As Shown | JOB NUMBER 69-054

CE 487-56-2

CONTRACT #: 688343-B

SD FILE NO. 57

Maryland State Archives

LOT 17 BLOCK 15		
No.	DESCRIPTION	
1	24" Sycamore	
2	27" Oak	
3	21" Poplar	
4	Rose bush **	
5	Rose bush **	
6	15" Hickory *	
7	Ron or Rose bushes *	
8	25" Oak *	
9	36" Oak	
10	14" Tree	
11	Athena bush	
12	" "	
13	6 Azaleas **	
14	8" Brick wall	Remove & Stack.
15	2' Wide S.D. Channel	" "
16	8" Stone wall	" "
17	Azalea *	
18	"	
19	"	
20	½ Dogwood	
21	½ Dogwood *	
22	Bluestone surface	
23	End exist. SD pipe	Brick Shut

* Tree Treatment "A"
** Tree Treatment "E"

Curve Data
Structures 2-7
R = 437.56'
Δ = 13°11'00"
C = 114.23'
L = 114.48'
T = 57.50'

Curve Data
R = 300.00
Δ = 17°11'-12"
T = 45.34
A = 90.00

W.S.S.C. P.N. 72013
FOR WORK IN PUBLIC SPACE SUBJECT TO PRIOR INSTALLATION OF WATER & SEWER AND PAYMENT FOR MOVING ANY W.S.S.C. STRUCTURES AFFECTED.

STATE OF MARYLAND — A. Marino Lorenzetti — No. 11161 — REGISTERED PROFESSIONAL ENGINEER

Drafting D.Y.	DATE	REVISIONS
Check R.O.	2-10-72	By M.C.D.P.W for Contract Plan
Design R.O.	2-21-72	Misc. pipes, structures - MD/DNR Res.
Check D.C.		

MCA
MATZ, CHILDS & ASSOCIATES OF ROCKVILLE
CONSULTING ENGINEERS
322 NORTH STONESTREET AVENUE ROCKVILLE, MARYLAND 20850
TELEPHONE 762-5533 AREA CODE 301

MONTGOMERY COUNTY DEPARTMENT OF PUBLIC WORKS

APPROVED E. Spencer Sayer, CHIEF-BUR. OF ENG'G. — Sept. 22, 1972, ACT. DIRECTOR DEPT. OF PUB. WKS.

PROJECT: GB SD G36

STORM DRAINS

GLEN ECHO HEIGHTS
BETHESDA DISTRICT
MONTGOMERY CO., MARYLAND

Sheet	DATE	JOB NUMBER
3 of 9	March, 1970	69-054
	SCALE As Shown	

CE487-56-3

CONTRACT # GB8343-B

SD FILE NO. 57

Maryland State Archives

Nº	DESCRIPTION
1	5" Dogwood
2	10" Hickory
3	End board fence
4	Guy Wire
5	12" Poplar
6	24" Poplar
7	Pep. Co. Pole #G10310
8	26" Maple
9	10" Maple
10	12" Sycamore
11	10" Poplar
12	Cor. board fence
13	8" Poplar
14	14" Oak.
15	Twin 26" Oak
16	12" Walnut
17	Row of bushes
18	4" White Pine
19	3-3" Hemlocks
20	6-Upright Yew
21	Azalea.
22	Azalea.

Scale: 1" = 50'

W.S.S.C. P.N. 72008
FOR WORK IN PUBLIC SPACE SUBJECT TO PRIOR INSTALLATION OF WATER & SEWER AND PAYMENT FOR MOVING ANY W.S.S.C. STRUCTURES AFFECTED.

STATE OF MARYLAND — A. MARIO LOIEDERMAN — No. 4086 — REGISTERED PROFESSIONAL ENGINEER

Drafting D.T.	DATE	REVISIONS
Check P.O.	2-16-72	By. M.C. D.P.W. for Contract File
Design P.O.	9-21-72	Misc. pipe & structures - MCDPW
Check D.C.		

M C A
MATZ, CHILDS & ASSOCIATES OF ROCKVILLE
CONSULTING ENGINEERS
322 NORTH STONESTREET AVENUE ROCKVILLE, MARYLAND 20850
TELEPHONE 762-5533 AREA CODE 301

MONTGOMERY COUNTY DEPARTMENT OF PUBLIC WORKS

APPROVED
E. James Sayer — CHIEF BUR. OF ENG'G.
Sept. 22, 1972 — ACT. DIRECTOR, DEPT. OF PUB. WKS.
PROJECT: 68 SD 636

STORM DRAINS
GLEN ECHO HEIGHTS
BETHESDA DISTRICT
MONTGOMERY CO., MARYLAND

Sheet 4 of 9 | DATE March, 1970 | SCALE As Shown | JOB NUMBER 69-054

CE 487-56-4

CONTRACT # 688343-B

SD FILE NO. 57

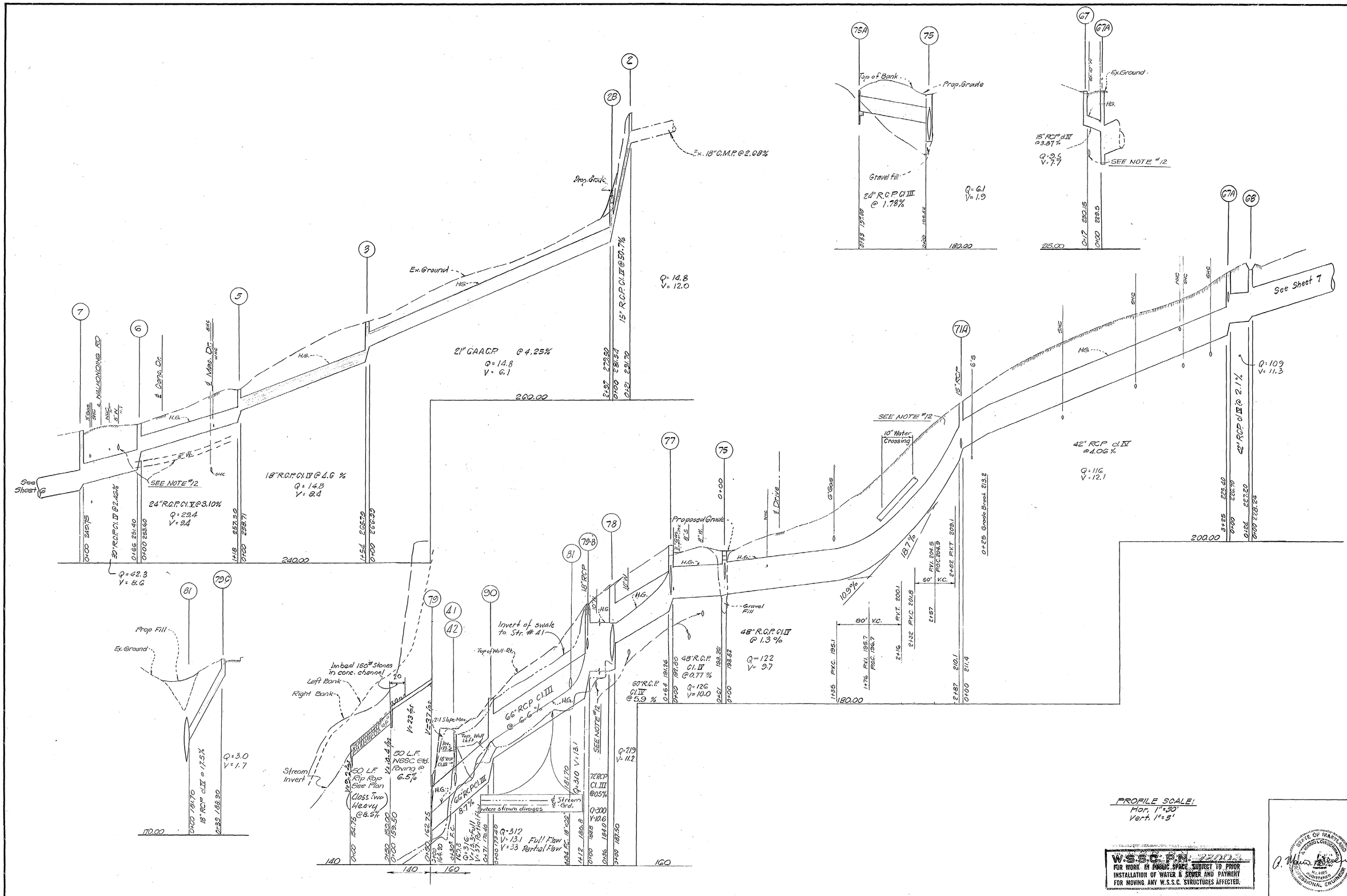

Drafting D.T.	DATE	REVISIONS
Check P.C.	2-16-72	By M.C.D.P.W. for Contract
Design P.O.	9-21-72	Misc. pipe & structures by MCDPW
Check D.C.		

MCA
MATZ, CHILDS & ASSOCIATES OF ROCKVILLE
CONSULTING ENGINEERS
322 NORTH STONESTREET AVENUE ROCKVILLE, MARYLAND 20850
TELEPHONE 762-5533 AREA CODE 301

MONTGOMERY COUNTY DEPARTMENT OF PUBLIC WORKS

APPROVED Sept. 22, 1972
E. James Sayer, CHIEF - BUR. OF ENG'G.
Richard J. Lynch, ACT. DIRECTOR, DEPT. OF PUB. WKS.
PROJECT: 68 SD 636

STORM DRAINS
GLEN ECHO HEIGHTS
BETHESDA DISTRICT
MONTGOMERY CO., MARYLAND

Sheet	DATE	JOB NUMBER
5 of 9	March, 1970	69-054
	SCALE As Shown	

CE487-56-5

CONTRACT # 688343-B

SD FILE NO. 57

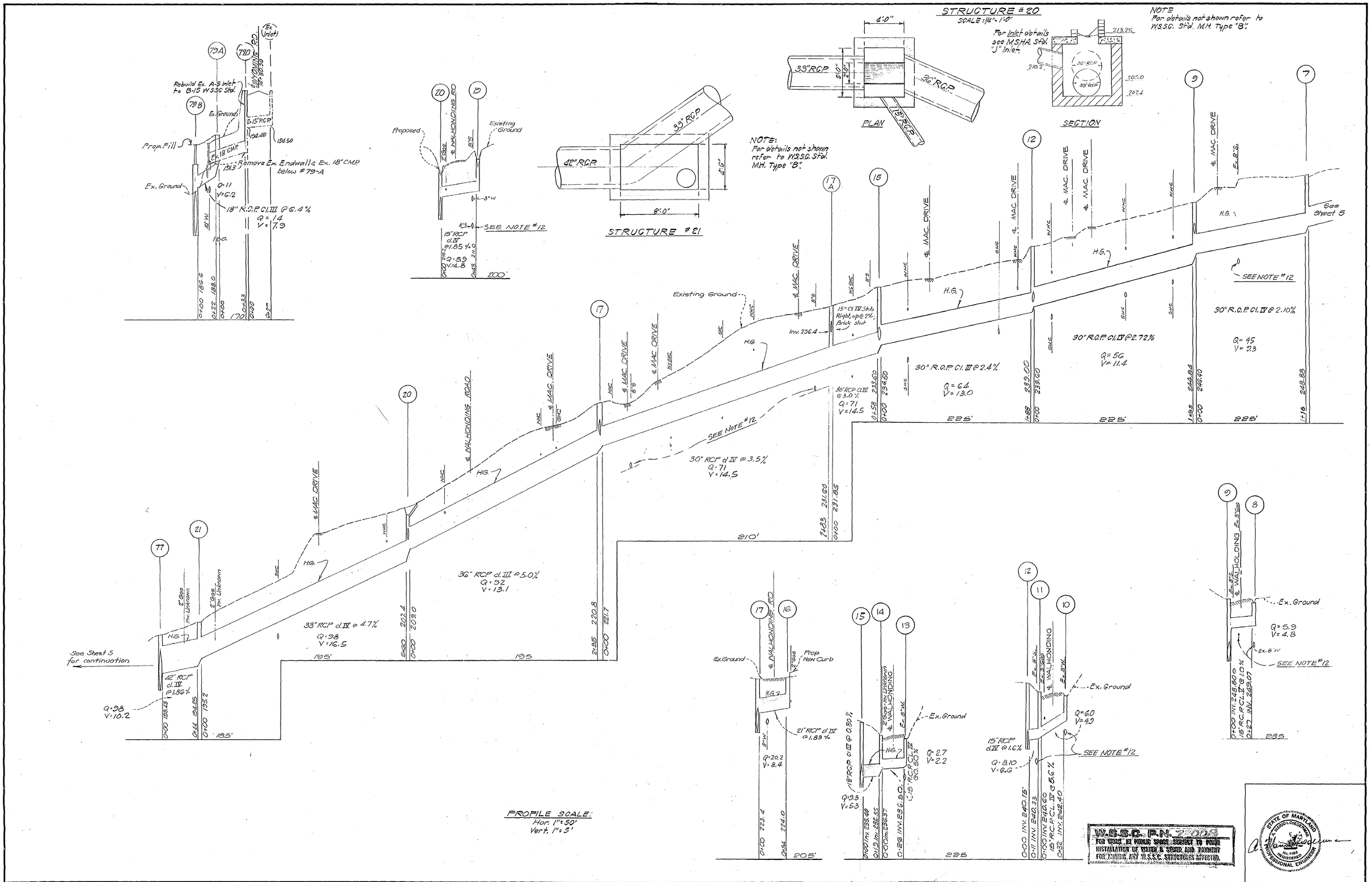

Drafting D.T.	DATE	REVISIONS
Check P.O.	2-10-72	By M.C.D.P.W. for Contract Tr.
Design P.O.	9-21-72	Misc. Pipe & Structures-MCDPW Mod.
Check D.C.		

MCA
MATZ, CHILDS & ASSOCIATES OF ROCKVILLE
CONSULTING ENGINEERS
322 NORTH STONESTREET AVENUE ROCKVILLE, MARYLAND 20850
TELEPHONE 762-5533 AREA CODE 301

MONTGOMERY COUNTY
DEPARTMENT OF
PUBLIC WORKS

APPROVED Sept. 22, 1972
E. James Sayer — CHIEF-BUR. OF ENG'G.
Richard J. Lynch — ACT. DIRECTOR, DEPT. OF PUB. WKS.
PROJECT: 68 SD G36

STORM DRAINS
GLEN ECHO HEIGHTS
BETHESDA DISTRICT
MONTGOMERY CO., MARYLAND

Sheet 6 of 9 | DATE March, 1970 | SCALE As Shown | JOB NUMBER 69-054

CE 487-56-6

CONTRACT # 688343-B

SD FILE NO. 57

Westerly Part of Lot 24
Jerry O. Nicholls
Liber 4069, Folio 494
January 1, 1971

Easterly Part of Lot 24
Minnie Irene Malone
Liber 2608, Folio 530
June 12, 1959

General Notes

1. For Field Coordinates see computations on Page 2
2. For Individual outlines see Page 3
3. For Comparison of Field Coor. to Final Adjusted Coordinates, see Page 4.
4. All deed ∡s and distances (Liber 2608, Folio 530) Held.

CURVE DATA					
Points	Radius	Delta	Arc	Tangent	Chord
25 to 31	129.95'	46°-31'-40"	105.53'	55.87'	S.79°-07'-54"W ~ 102.65'
31 to 32	10.00'	79°-00'-24"	13.79'	8.24'	N.38°-06'-03"W. ~ 12.72'
32 to 9	340.36'	14°-56'-35"	88.77'	44.64'	N.06°-04'-08"W. ~ 88.52'
25 to 27	129.95'	15°-43'-54"	35.68'	17.95'	S.63°-44'-01"W ~ 35.57'
27 to 31	129.95'	30°-47'-46"	69.85'	35.79'	S.86°-59'-51"W ~ 69.01'
211 to 212	300.00'	07°-39'-50"	40.13'	20.09'	N.80°-55'-03"E ~ 40.10'
32 to 230	340.36'	00°-19'-55"	1.97'	0.99'	N.01°-14'-11"E. ~ 1.97'
213 to 214	290.00'	07°-39'-50"	38.79'	19.42'	N.80°-55'-03"E. ~ 38.76'

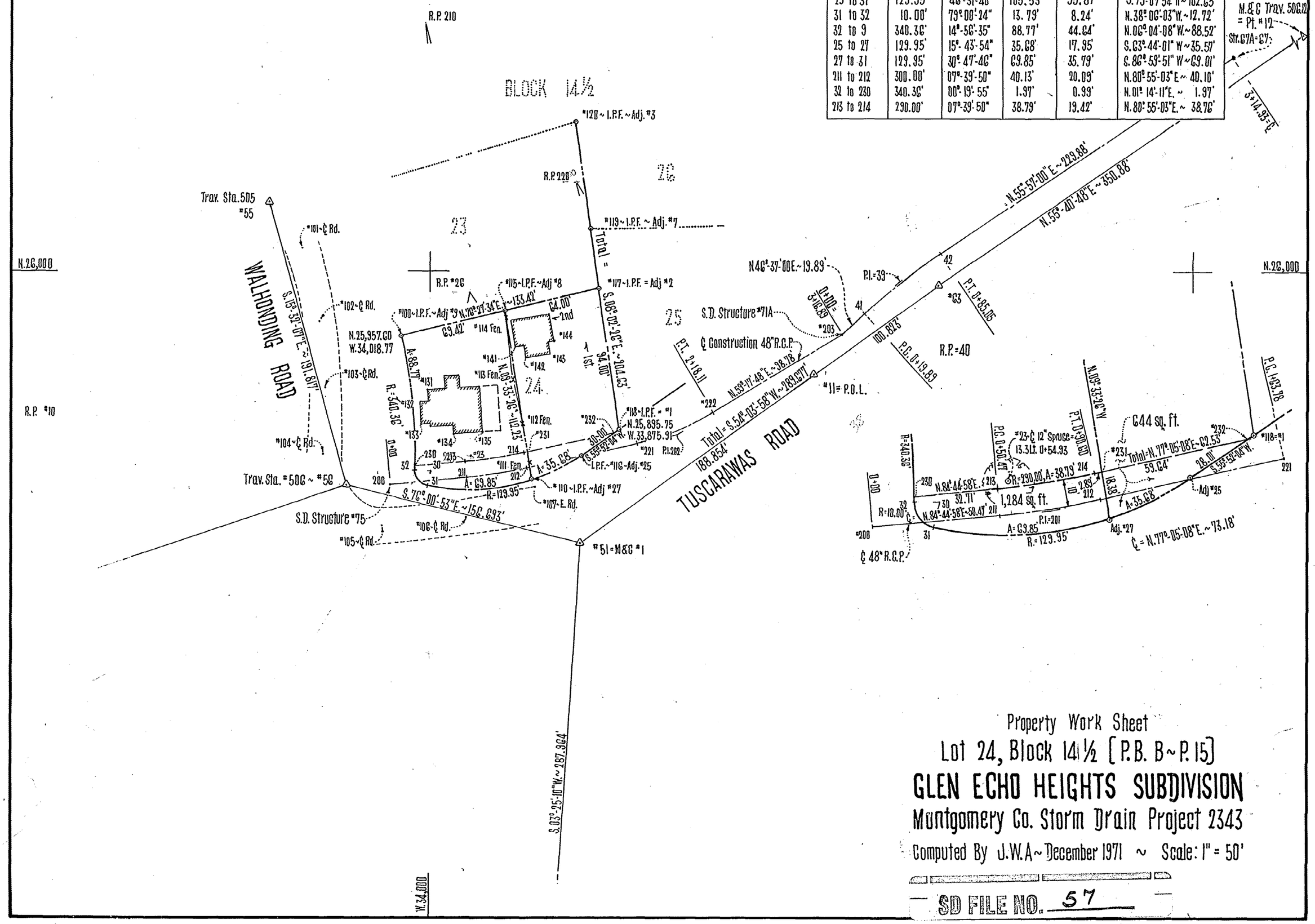

Property Work Sheet
Lot 24, Block 14½ [P.B. B ~ P. 15]
GLEN ECHO HEIGHTS SUBDIVISION
Montgomery Co. Storm Drain Project 2343
Computed By J.W.A ~ December 1971 ~ Scale: 1" = 50'

SD FILE NO. 57

72-2343 CE 487-56-7 68SDG 36

Maryland State Archives

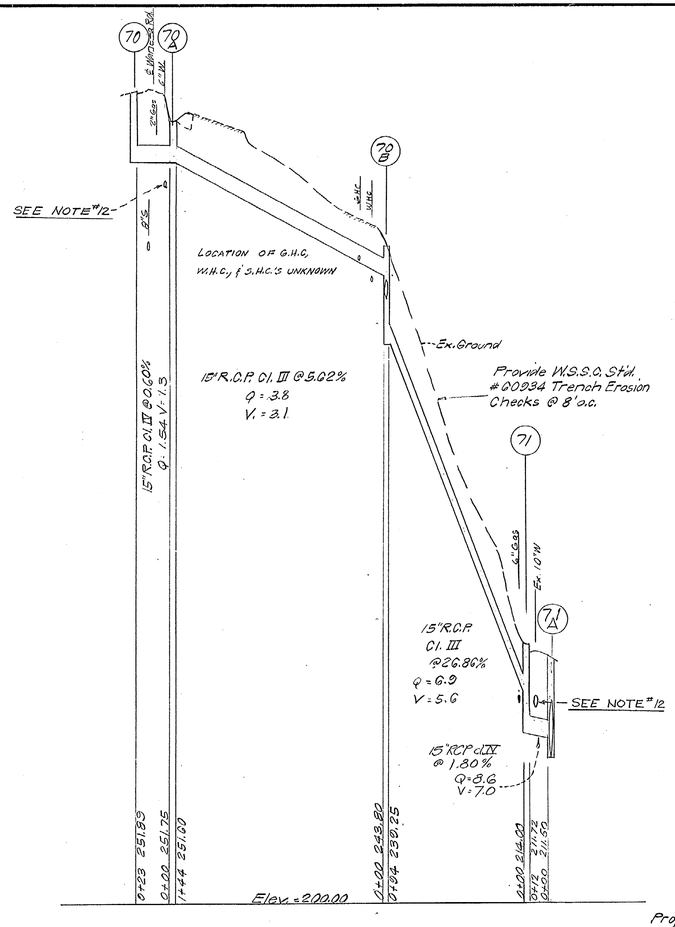

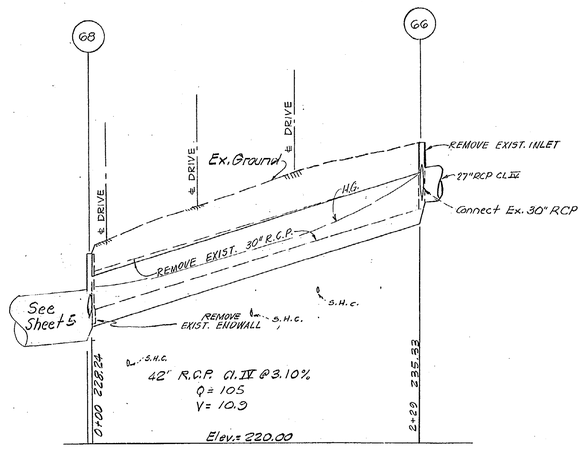

PIPE SCHEDULE		
SIZE	TYPE	LENGTH
12"	CMP 16 ga.	10'
15"	RCP Cl. III	280'
15"	RCP Cl. IV	207'
15"	RCP Cl. V	58'
18"	RCP Cl. III	42'
18"	RCP Cl. IV	212'
21"	RCP Cl. III	34'
21"	CAACP ✻	297'
24"	RCP Cl. III	83'
24"	RCP Cl. V	118'
27"	RCP Cl. III	97'
27"	RCP Cl. IV	172'
30"	RCP Cl. III	188'
30"	RCP Cl. IV	718'
33"	RCP Cl. IV	260'
36"	RCP Cl. III	235'
42"	RCP Cl. III	153'
42"	RCP Cl. IV	622'
48"	RCP Cl. IV	348'
54"	RCP Cl. IV	49'
60"	RCP Cl. IV	64'
66"	RCP Cl. III	183'
78"	RCP Cl. III	36'

✻ CAACP Thickness 0.075"

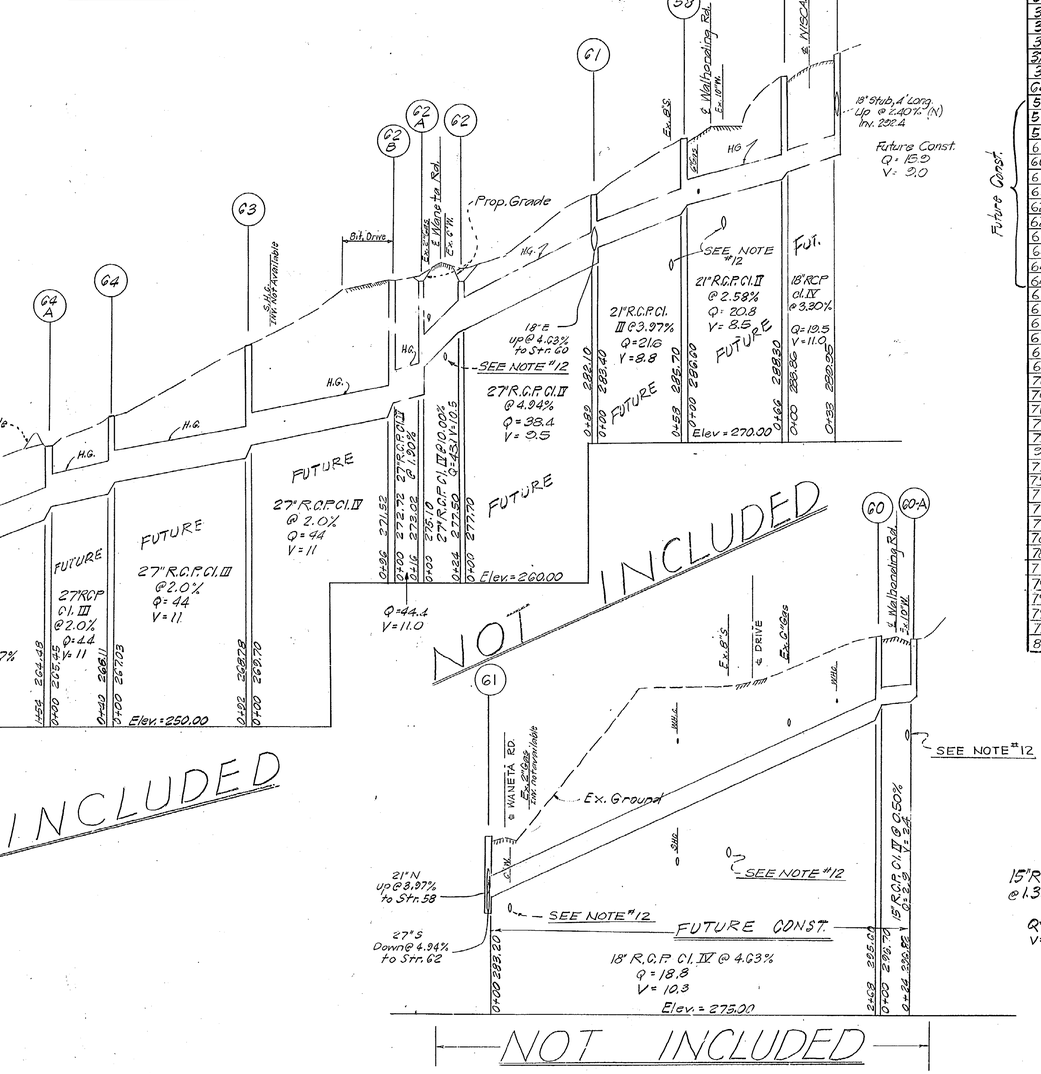

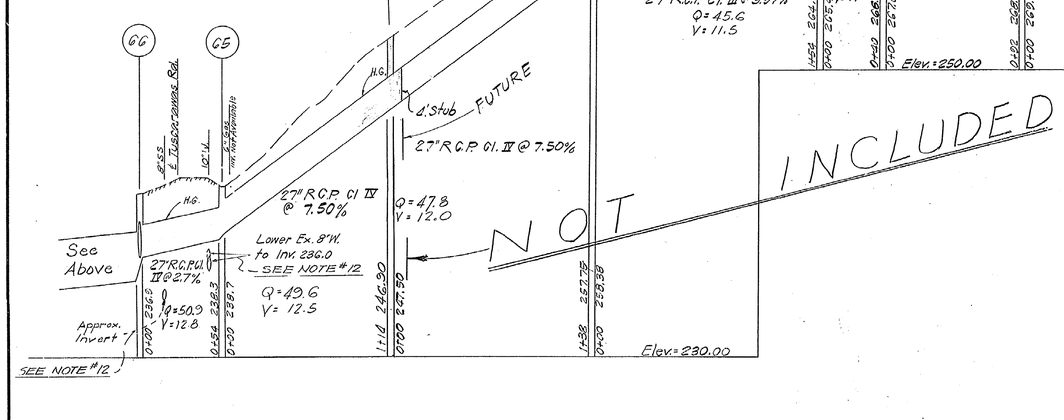

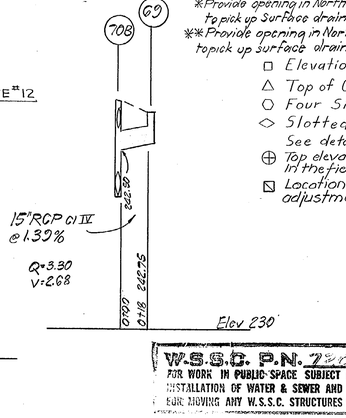

STRUCTURE SCHEDULE					
Nº	TYPE	INVERT IN	INVERT OUT	TOP ELEV. ⊕	REMARKS
2	Inlet	291.00	291.70	296.90	Exist. B-10 WSSC Std.
2A	Manhole	281.54	279.50	285.00	B-48" WSSC Std.
3	Manhole	266.99	265.79	269.50	B-48" WSSC Std.
5	Inlet	258.71	257.30	261.40	J" MSHA Std. □ L=4'
6	Inlet	253.60	251.40	257.30	J" " Std. □ L=6'
7	Inlet	249.75	248.88	252.15	B-15 WSSC. Std. △ W=3'4"
8	Inlet	—	249.07	252.05	J" MSHA. Std. □ L=4'
9	Inlet	248.80 / 248.40	244.24	252.75	B-15 WSSC Std. △ W=5'-2"
10	Inlet	—	242.30	245.55	U" MSHA. Std. □ L=4'
11	Inlet	240.57	240.32	246.00	B-10 WSSC. Std. △ W=2'6"
12	Manhole	240.18 / 230.60	238.90	247.15	B-48" WSSC Std.
13	Inlet	—	236.30	240.15	"K" MSHA Std. Dbl grate Type I □
14	Inlet	236.37	235.50	240.63	B-15 WSSC Std. △ W=2'6"
15	Manhole	233.70 / 233.20	234.00	241.85	B-48" WSSC Std.
16	Inlet	—	224.00	227.85	MSHA Dbl 3" Comb. △ Form localized sump
17	Inlet	227.90 / 223.30	220.80	227.35	B-15 WSSC Std. △ W=5'-6"
19	Inlet	—	211.00	214.95	U" MSHA Std. □ L=4'
20	Inlet	203.95 / 203.55	207.40	213.25	See Detail Sht #9 □ L=4'
21	Manhole	195.20	194.25	199.70	See Detail Sht #9
17-A	Manhole	236.6 / 232.6	231.80	Ex. Grd.	B-48" WSSC Std.
40	Conc. End Sec.	Ex.	Ground	"	MSHA Std. 18" ☑
41	Inlet	173.6	173.4	176.2 (Grate)	N.P.S. Std. E-4 ☑
42	Field Conn.	169.80	—	—	18"x66" WSSC Std. ☑
24	Inlet	—	277.18	281.60	B-15 WSSC Std. △ W=2'6"
25	Manhole	277.00 / 271.00	274.50	279.50	B-48" WSSC Std Two Grated Sides
26	Manhole	273.50 / 273.10	270.80	281.00	B-48" " "
26A	Inlet	—	270.00	275.25	J" MSHA Std. □ L=4'
34	Manhole	248.80	247.25	252.10	B-48" WSSC. Std.
35	Inlet	—	249.00	253.20	B-10 W.S.S.C. Std. △ W=2'6"
36	Inlet	248.69 / 240.00	248.16	252.80	B-10 " " △ W=2'6"
37	Manhole	241.00 / 240.00	238.15	244.85	B-54" W.S.S.C. Std.
37A	Endwall	—	243.00	244.95	C-15" MSHA Std.
38	Endwall	—	237.80	242.55	C-42" " "
G4C	Inlet	247.50	247.10	252.30	B-20 WSSC Std. △ W=5'6" L=6'
56	Inlet	292.40	289.95	297.00	B-10 W.S.S.C. Std.
57	Inlet	293.96	293.30	295.55	B-20 W.S.S.C. Std. △
58	Inlet	286.60	285.70	291.25	B-15 WSSC Modified △
60	Inlet	296.70	295.60	301.45	B-10 W.SSC Std △
60A	Inlet	—	296.82	301.25	B-10 W.S.S.C. Std. △
61	Inlet	283.20 / 283.00	282.10	287.35	"K" MSHA Std. Dbl grate Type I 378.08
62	Inlet	277.70	277.50	281.00	Double "S" Comb. - MSHA Std. △
62A	Inlet	275.10	273.02	281.04	" " " " △
62B	Manhole	272.12	271.52	281.05	B-48" W.S.S.C. Std.
63	Manhole	269.10	268.78	276.60	B-48" W.S.S.C. Std.
64	Manhole	267.03	266.11	271.65	B-48 W.S.S.C. Std.
64A	Inlet	265.45	264.48	269.55	"D" W.S.S.C. Std. ◇
64B	Inlet	258.38	257.75	262.20	D" W.S.S.C. Std. ◇
65	Inlet	238.71	238.28	241.90	"K" MSHA Std. Dblgrate Type I
66	Inlet	236.98	235.33	241.45	A-10 W.S.S.C. Std. △ W=4'6"
67	Inlet	—	230.15	234.45	B-20 W.S.S.C. Std. △ W=5'-6"
67A	Manhole	232.40 / 232.20	225.90	234.40	See Detail Sht "2
68	Manhole	228.24	227.98 / 227.88	233.60	" " Sht "9 ✻
69	Inlet	—	242.75	249.20	J" MSHA. Std. □ L=4'
70	Inlet	—	251.87	256.68	B-10 W.S.S.C. Std. △ W=2'6"
70A	Inlet	251.75	251.60	254.55	U" MSHA Std. □ L=4'
70B	Manhole	242.50 / 242.30	239.25	245.85	B-48" W.S.S.C. Std.
71	Inlet	214.00	211.70	218.05	A-10 WSSC Std. W=2'6"
71A	Manhole	211.90 / 211.30	210.10	Ex. Grd.	B-60 WSSC Std
90	Manhole	193.40	190.40	180.5	B-72 WSSC Std. ☒
75	Manhole	193.32 / 193.12	193.25	198.77	B-60" W.S.S.C. Std ✻✻
75A	Endwall	—	197.00	199.50	"C"-24" MSHA. Std.
76	Manhole	192.85	191.49	199.00	See Detail Sht #9
77	Manhole	193.43 / 193.43	191.26	199.50	See Detail Sht #9
78	Manhole	187.50 / 187.30	184.00	194.25	See Detail Sht #9
78A	Manhole	188.13	185.88	194.00	" " Sht #9
78B	Field Conn.	192.75	—	—	W.S.S.C. Std (6"x42")
79	Headwall	—	164.20	170.91	B-66 MSHA. Std.
79A	Inlet	190±	188.00	Ex. Grd	B-20 W.S.S.C. Std. W=2'6"
79B	Manhole	186.50 / 183.80	180.60	192.20	B-72" " "
79C	Inlet	—	180.70	192.00	B-10 WSSC Std. △ W=2'6"
79D	Inlet	194.46	191.30	199.00	Modify Exist to B-15 WSSC Std
81	Field Conn.	181.70	—	—	18"x66" WSSC Std.

✻ Provide opening in North side of MH, similar to Str #77 to pick up Surface drainage.
✻✻ Provide opening in North & South side of MH, similar to Str #77 to pick up surface drainage.

□ Elevation at Bottom of Notch
△ Top of Curb Elevation.
○ Four Sides Open.
◇ Slotted to maintain stream flow See detail, Sheet 8 of 9
⊕ Top elevations are subject to adjustment in the field to meet existing conditions.
☒ Location and/or depth, subject to minor adjustment to meet field conditions.

Future Const.

W.S.S.C. P.N. 7-1005
FOR WORK IN PUBLIC SPACE SUBJECT TO PRIOR INSTALLATION OF WATER & SEWER AND PAYMENT FOR MOVING ANY W.S.S.C. STRUCTURES AFFECTED.

STATE OF MARYLAND — A. MARIO DIGIROLAMO — No. 6798 — REGISTERED PROFESSIONAL ENGINEER

Drafting D.T.	DATE	REVISIONS
Check P.D.	2-10-72	By MCDPW for Contract #'s:
Design P.D.	9-21-72	Misc. Pipe & Structures - MCDPW No.
Check D.C.		

MCA
MATZ, CHILDS & ASSOCIATES OF ROCKVILLE
CONSULTING ENGINEERS
322 NORTH STONESTREET AVENUE ROCKVILLE, MARYLAND 20850
TELEPHONE 762-5533 AREA CODE 301

MONTGOMERY COUNTY DEPARTMENT OF PUBLIC WORKS

APPROVED Sept. 22, 1972
E. Francis Sayer, CHIEF - BUR. OF ENG'G. — Richard J. Fissel, ACT. DIRECTOR, DEPT. OF PUB. WKS.
PROJECT: 68 SD 036

STORM DRAINS
GLEN ECHO HEIGHTS
BETHESDA & VICINITY
MONTGOMERY CO., MARYLAND

Sheet 7 of 9 | DATE March, 1970 | SCALE As Shown | JOB NUMBER 69-054

CE 487-56 -8
CONTRACT # 688343-B
SD FILE NO. 57

Maryland State Archives

K&E C-T 19 1153 5-71 46259-

Maryland State Archives

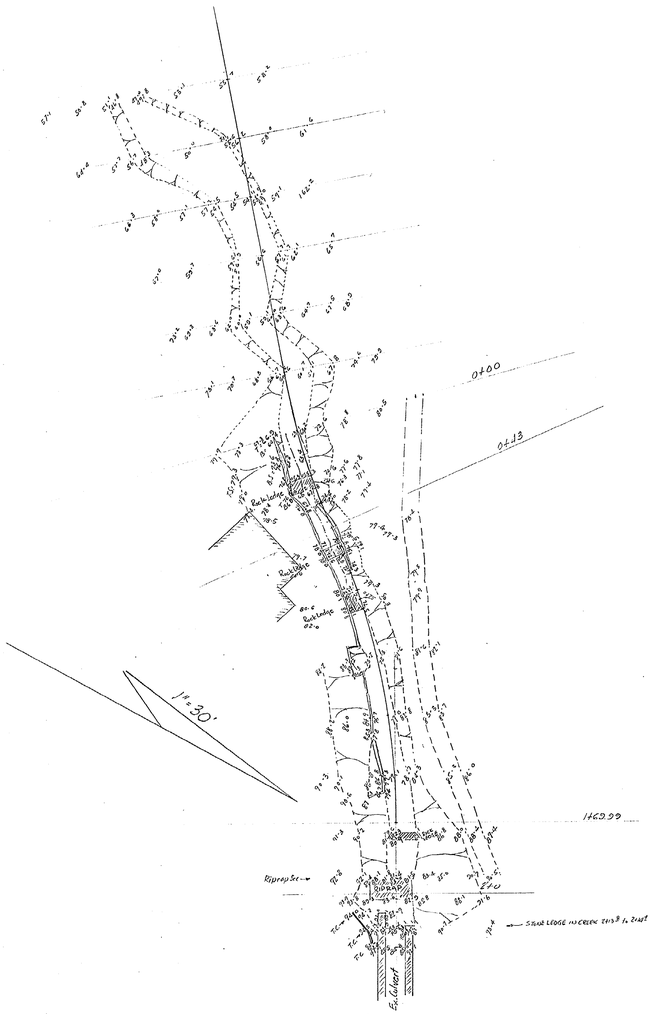

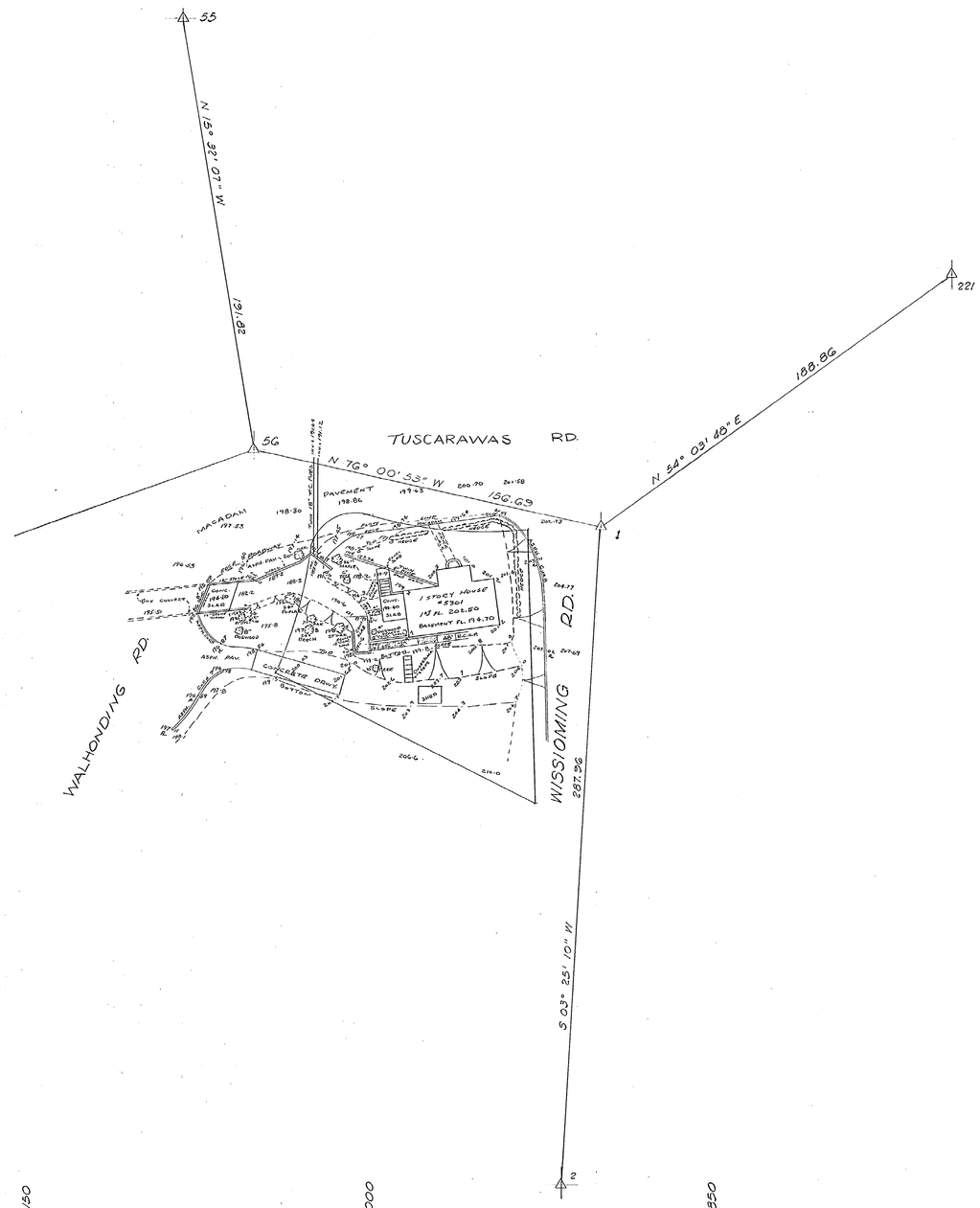

Outfall thru Power House Lot

(Plotted from X-sec. taken May & Sept. 1972 by Surveys, Dept. of Public Works)

TOPO SURVEY OCT. 29 1971
KOLNER
MONARD
BORDETTE
JOHN TAYLOR
RIVERSTONE
REED

NUMBER	REVISION	DATE

DES.
DR.
CHK.
REVISIONS

MONTGOMERY COUNTY MARYLAND
DEPARTMENT OF PUBLIC WORKS
ROCKVILLE, MD.

OCT., 1971 SCALE: 1"=30'

APPROVED

CHIEF-BUR. OF ENG'G. DEP. DIRECTOR, DEPT. OF PUB. WKS.

PROJECT: 72-2343 DWG: 1 OF 1

SD FILE NO. 57

CE 487-56 -9

K&E C-T 19 1153 11-71 48259●

WALHONDING ROAD

Scale: 1" = 30'

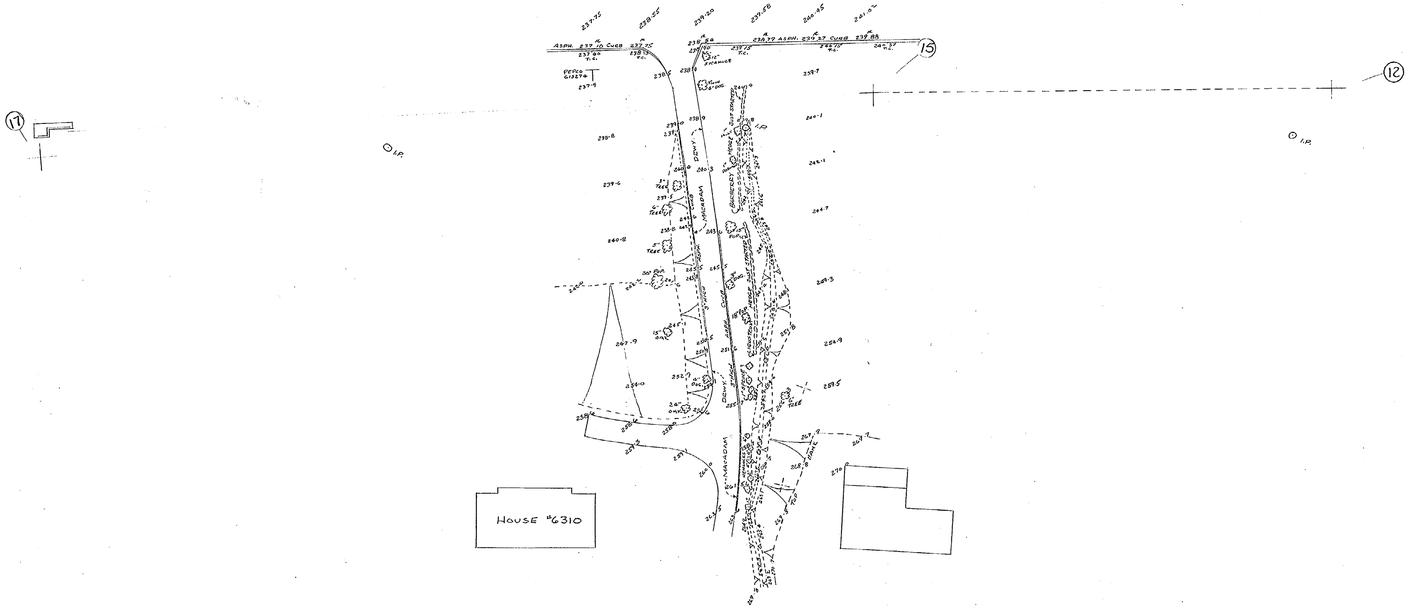

DETAIL SURVEY
APRIL 3, 1972
KOINER
MONARD
BURDETTE
RHODERICK
REED

DES.
DR.
CHK.
REVISIONS

MONTGOMERY COUNTY MARYLAND
DEPARTMENT OF PUBLIC WORKS
ROCKVILLE, MD.

GLEN ECHO HEIGHTS
CRUMMEL PROP

APPROVED

CHIEF BUR. OF ENG'G. | DEP. DIRECTOR, DEPT. OF PUB. WKS.

PROJECT: 72-2343 | DWG: OF

NUMBER	REVISION	DATE

SD FILE NO. 57

CE 487-56-10

Maryland State Archives

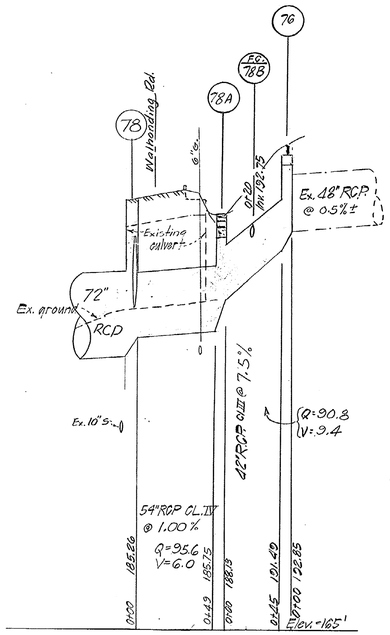

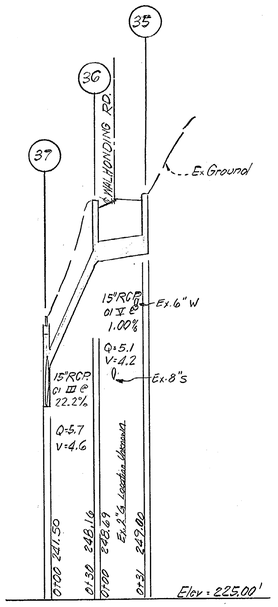

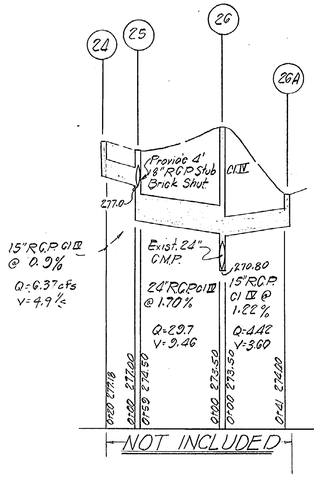

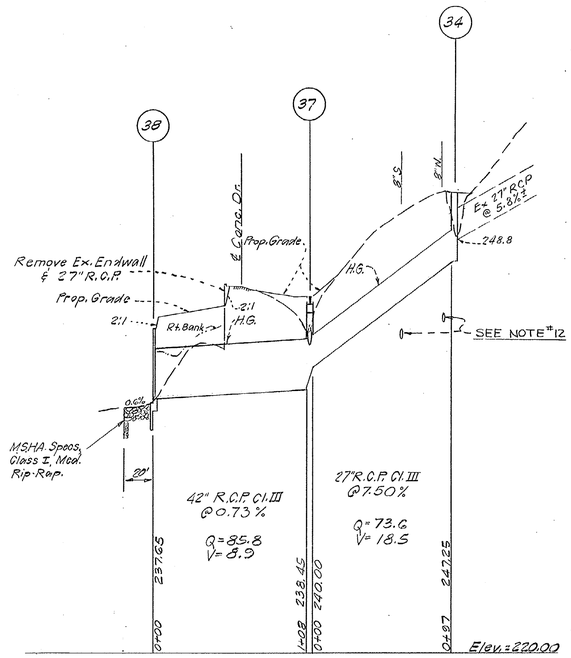

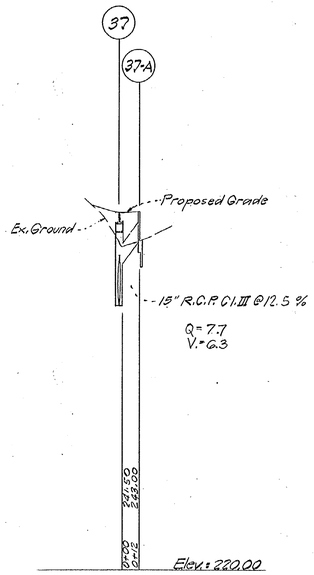

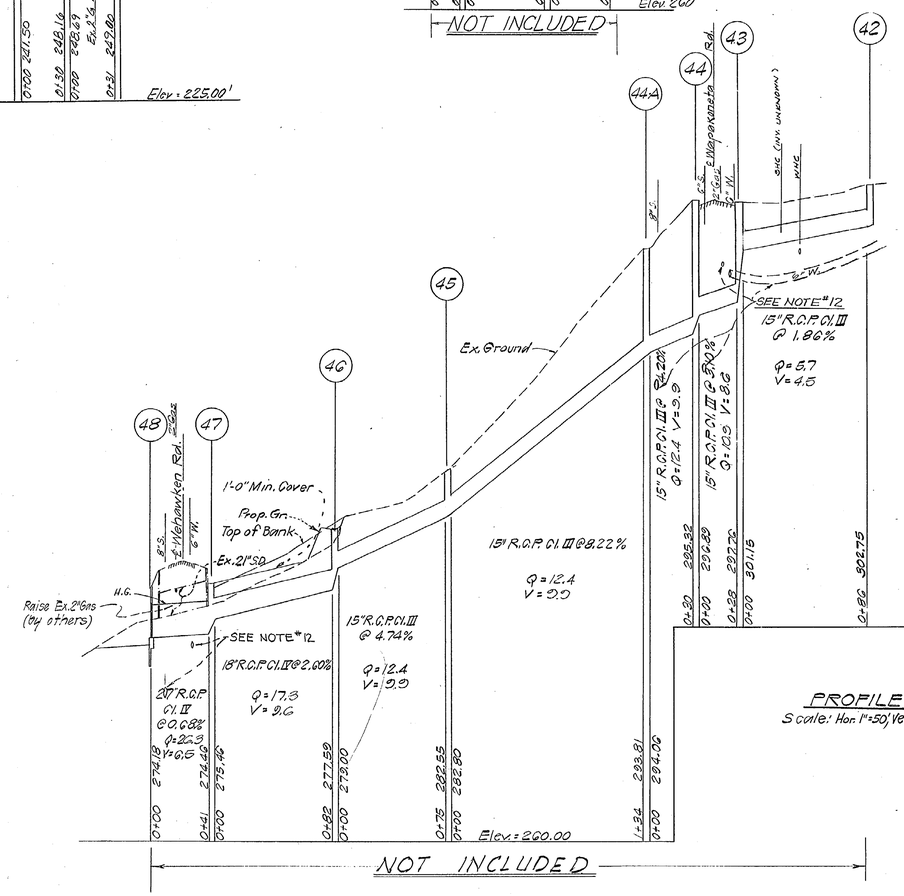

PROFILE
Scale: Hor. 1"=50' Vert. 1"=5'

W.S.S.C. P.N. 72-0103
FOR WORK IN PUBLIC SPACE SUBJECT TO PRIOR INSTALLATION OF WATER & SEWER AND PAYMENT FOR MOVING ANY W.S.S.C. STRUCTURES AFFECTED.

STATE OF MARYLAND — A. MARIO J. GIGLIOTTI — REGISTERED PROFESSIONAL ENGINEER

Drafting D.T.	DATE	REVISIONS
Check P.O.	9-10-72	By M.C.D.P.W. for Contract Plans
Design P.O.	9-21-72	Misc. pipe & Structures - MCDPW - JCW
Check D.C.		

MCA
MATZ, CHILDS & ASSOCIATES OF ROCKVILLE
CONSULTING ENGINEERS
322 NORTH STONESTREET AVENUE ROCKVILLE, MARYLAND 20850
TELEPHONE 762-5533 AREA CODE 301

MONTGOMERY COUNTY DEPARTMENT OF PUBLIC WORKS

APPROVED — Sept. 22, 1972
E. James Sayer, CHIEF - BUR. OF ENG'G. — Richard J. Lynch, ACT. DIRECTOR, DEPT. OF PUB. WKS.
PROJECT: G8 SD 936

STORM DRAINS
GLEN ECHO HEIGHTS
BETHESDA DISTRICT
MONTGOMERY CO., MARYLAND

CONTRACT # 688343-B

CE 487-56-11

Sheet	DATE	JOB NUMBER
3 of 3	March, 1970	69-054
	SCALE As Shown	

SD FILE NO. 57

Maryland State Archives

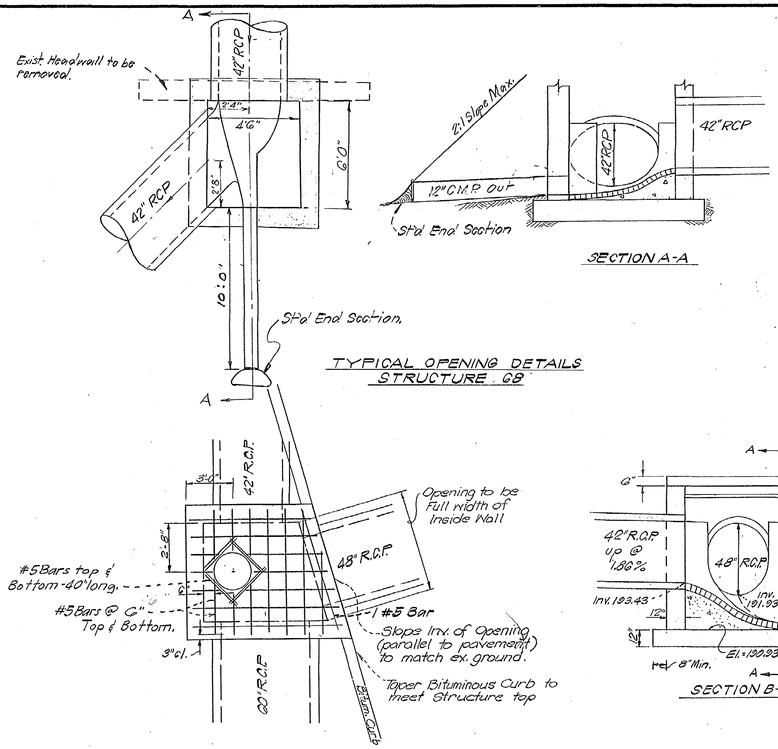

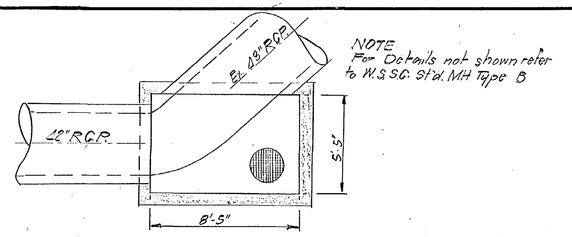

NOTE
For Details not shown refer to W.S.S.C. St'd. MH Type B

STRUCTURE #76
SCALE: 1/4" = 1'

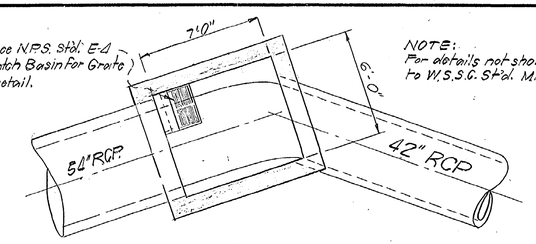

NOTE:
For details not shown refer to W.S.S.C. St'd. M.H. Type "B"

STRUCTURE #78A
SCALE: 1/2" = 1'

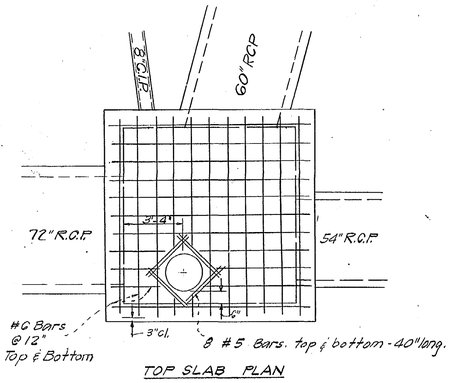

TOP SLAB PLAN

Note: Top slab reinforcing shown, Bottom slab reinforcing similiar.

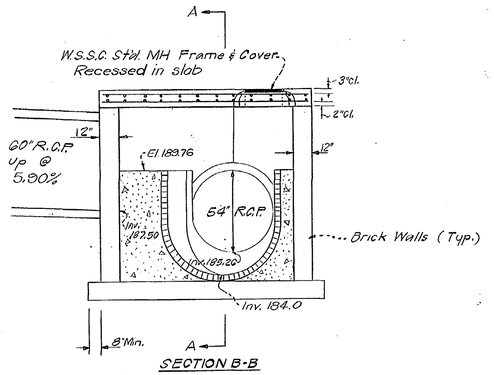

NOTE:
Provide 8" Cast Iron Pipe to replace exist. overflow from WSSC relief valve. Extend 8" C.I.P. through N.W. corner of Str. #78 @ invert elevation 189.76

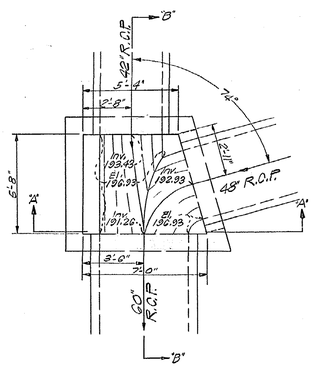

PLAN

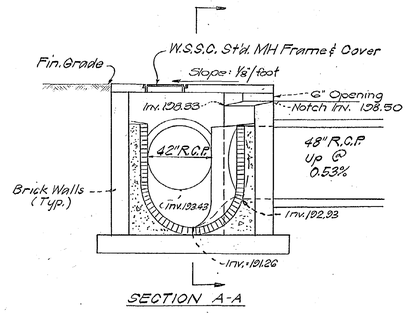

SECTION A-A

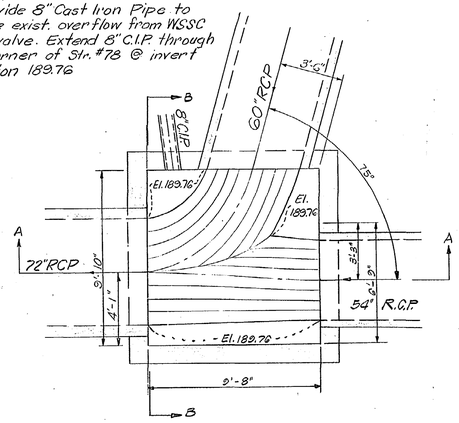

PLAN

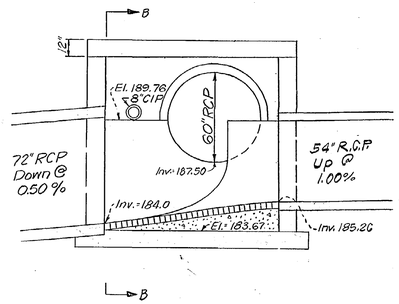

SECTION A-A

DETAIL OF STRUCTURE #77
SCALE: 1/4" = 1'

DETAIL OF STRUCTURE # 78
SCALE: 1/4" = 1'

W.S.S.C. P.N. 1208B
FOR WORK IN PUBLIC SPACE SUBJECT TO PRIOR INSTALLATION OF WATER & SEWER AND PAYMENT FOR MOVING ANY W.S.S.C. STRUCTURES AFFECTED.

STATE OF MARYLAND — No. 1984 — REGISTERED PROFESSIONAL ENGINEER

Drafting	DATE	REVISIONS
Check	2-10-72	By M.C.D.P.W. for Contract C.L.
Design	9-21-72	Misc. Pipe & Structures by MCDPW - J.D.
Check		

MCA
MATZ, CHILDS & ASSOCIATES OF ROCKVILLE
CONSULTING ENGINEERS
322 NORTH STONESTREET AVENUE ROCKVILLE, MARYLAND 20850
TELEPHONE 762-5533 AREA CODE 301

MONTGOMERY COUNTY DEPARTMENT OF PUBLIC WORKS

APPROVED E. James Sayer CHIEF, BUR. OF ENG'G. — Sept. 22, 1972 ACT. DIRECTOR, DEPT. OF PUB. WKS.

PROJECT: 68 9D G36

STORM DRAINS
GLEN ECHO HEIGHTS
BETHESDA DISTRICT
MONTGOMERY CO., MARYLAND

CONTRACT # 688343-B

Sheet	DATE	JOB NUMBER
9 of 9	Sept., 1970	69-054
	SCALE: As Shown	

CE 487-56-12

SD FILE NO. 57

Maryland State Archives