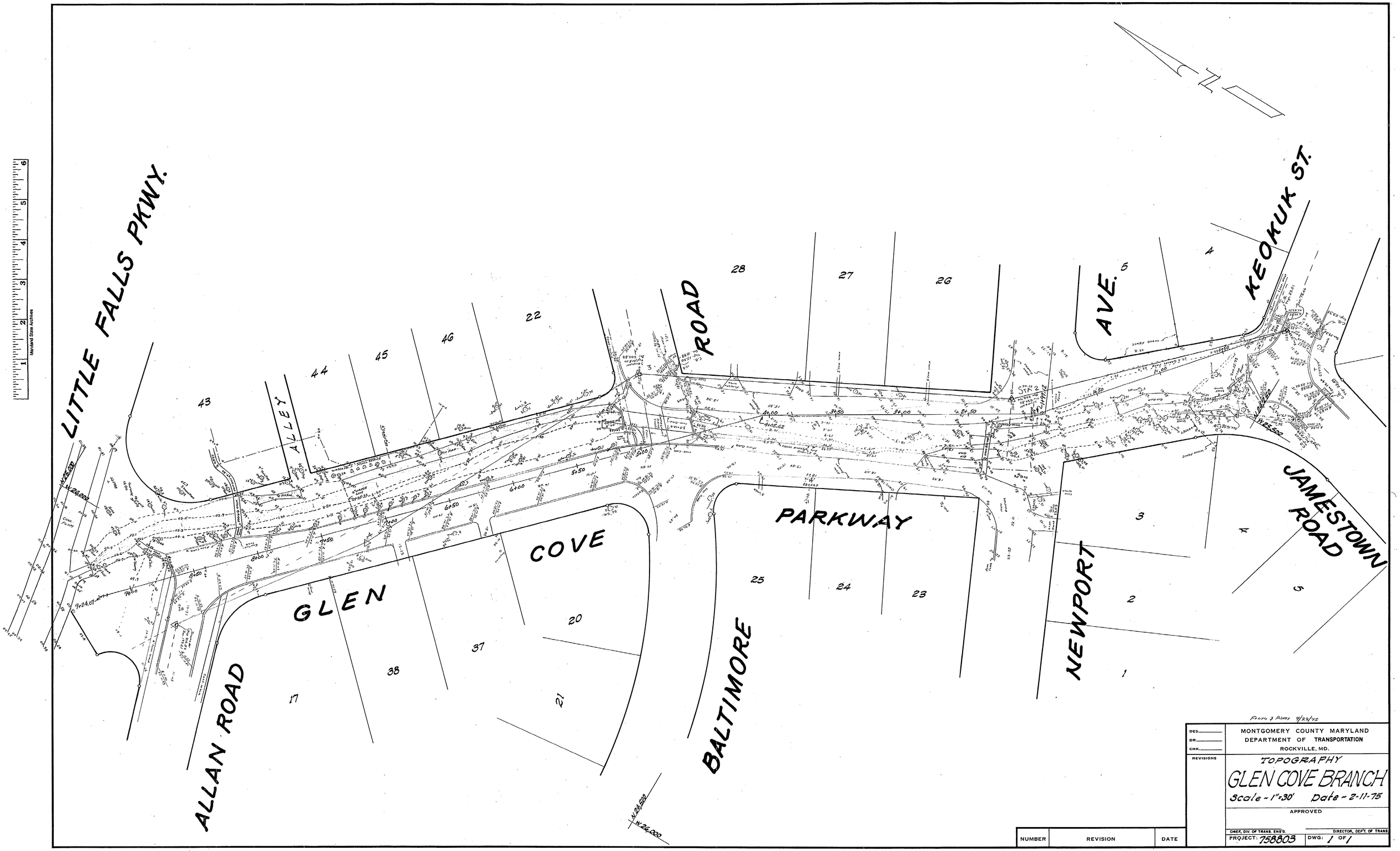

SD FILE NO. 52

CE 487-51 -1

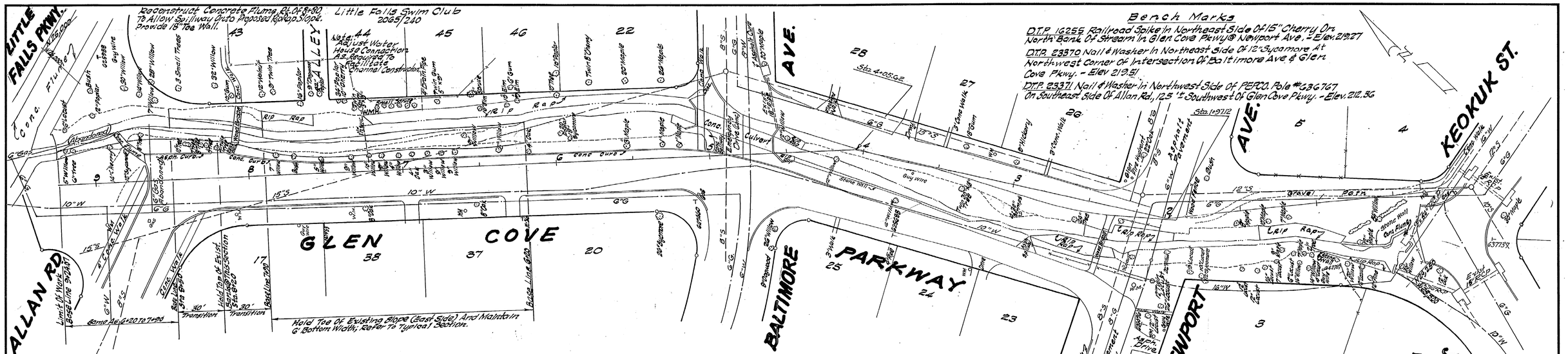

PLAN VIEW
Scale 1"=30

GENERAL AND SEDIMENT CONTROL NOTES

1. All Construction Shall Be In Accordance With The Latest Edition Of The General Specifications Of The Maryland State Highway Administration And Montgomery County.
2. Existing Utilities Are Shown On The Drawings In Accordance With The Best Information Available, However, The County Assumes No Responsibility For The Accuracy Of Such Information. The Contractor Must Determine The Exact Location And Elevation Of Existing Utilities By Digging Test Pits By Hand At All Utility Crossings Well In Advance Of Construction.
3. When Clearance Around Mains Is Less Than Shown On This Plan Or 3½ (6) Inches, Whichever Is Less, Contact The Utility Owner To Arrange For Acceptable Crossing Or Adjustment.
4. All Erosion And Sediment Control Measures Are To Be Constructed And Maintained In Accordance With The Latest Edition Of The "Standards And Specifications For Soil Erosion And Sediment Control In Urbanizing Areas."
5. All Points Of Construction Ingress And Egress Will Be Protected To Prevent Tracking Of Mud Onto Public Ways.
6. The Contractor Shall Minimize Off-Site Sedimentation Using Straw Bales, Sand Bags, Or Other Appropriate Measures As Required.
7. Sod Or Seed And Mulch, As Required, All Disturbed Areas Not To Be Paved In Accordance With "Standards And Specifications For Soil Erosion And Sediment Control In Urbanizing Areas."
8. Approval Of The Sediment Control Plan For This Project Is Conditional Upon The Approval Of A Sediment Control Plan For Off-Site Waste And Borrow Areas. Before The Final Award Of The Contract, The Contractor Must Submit The Plan (s) Approved By Montgomery Soil Conservation District (If Such Areas Are Required) For Conformance To The Sediment Control Ordinance, Chapter 19, Montgomery County Code 1972, As Amended For All Off-Site Waste And/or Borrow Areas.

CONSTRUCTION NOTES

1. Provide 2' Cut-Off Wall At Each Upstream And Downstream Limit Of Rip Rap.
2. Underpin Existing Undermined West Abutment Of Footbridge With Unreinforced SHA. Mix #1 Concrete. → 5' in Width × 1½' / 5' / 2'
3. Remove Existing Trees And Shubbery Between Top Of Banks, Sta 6+20 To 9+24.07. Areas Thus Disturbed Outside The New Slopes Shall Be Graded To Meet Existing Slopes And Sodded.
4. Between 5+20 And 5+50, Reconstruct Grouted Rip Rap On East Slope To Conform To Existing And Backfill West Bank And Rip Rap (Ungrouted) Slope To Meet Adjacent Area.

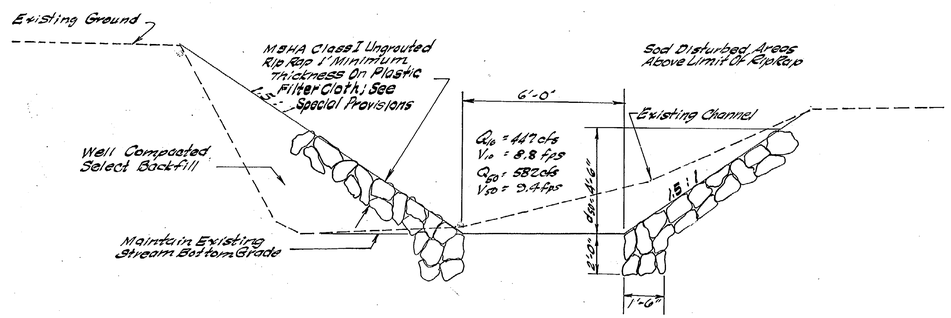

CHANNEL SECTION
8+20
Scale ~ 3/8" = 1'-0"

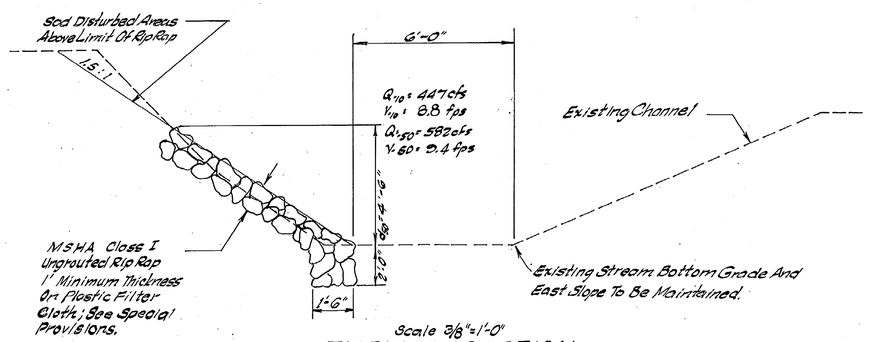

Scale 3/8" = 1'-0"
TYPICAL SECTION
6+20 To 7+90
8+50 To 9+24.07

DESIGN CERTIFICATION

I Hereby Certify That The Sediment Control Plan For This Project Has Been Prepared In Accordance With Standards And Specifications For Soil Erosion And Sediment Control In Urbanizing Areas And Montgomery County Department Of Transportation Interim Storm Drain Design Criteria, Dated July 1st 1968 And That The Total Amount Of Excavation And Fill As Shown On These Plans, is 60 Cubic Yards And 35 Cubic Yards Respectively.

Harry J. Grossmann Jr. — 12/4/75
Harry J. Grossmann Jr. — Date
Maryland Reg. 9919

STATE OF MARYLAND — HARRY JOSEPH GROSSMANN JR. — No. 9919 — REGISTERED PROFESSIONAL ENGINEER

BUILDERS CERTIFICATION

I Hereby Certify That All Clearing, Grading, Construction And/Or Development Will Be Done Pursuant To This Plan"

Richard J. Lynch, Director — 12-1-76
Date

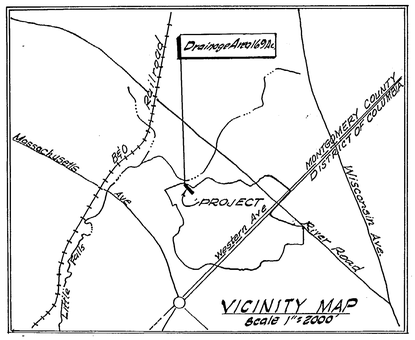

VICINITY MAP
Scale 1" = 2000'

FOR LOCATION OF UTILITIES CALL 24 HOURS A DAY 559-0100 48 HOURS IN ADVANCE OF ANY WORK IN THIS VICINITY

W.S.S.C. PERMIT # 77126
FOR WORK IN PUBLIC SPACE SUBJECT TO PRIOR INSTALLATION OF WATER & SEWER AND PAYMENT FOR ANY ADJUSTMENT OF W.S.S.C. FACILITIES AFFECTED.

NUMBER	REVISION	DATE

DES. HJG
DR. CLW
CHK. RJ
REVISIONS

MONTGOMERY COUNTY MARYLAND
DEPARTMENT OF TRANSPORTATION
ROCKVILLE, MD.

CHANNEL IMPROVEMENT
GLEN COVE BRANCH

Scale - As Noted — Date 5-29-75

APPROVED 12/1/76
CHIEF, DIV. OF TRANS/ENG'G — DIRECTOR, DEP'T OF TRANS.
PROJECT: 758803 — DWG: 1 OF 1

SD FILE NO. 52

CE 487-51-2