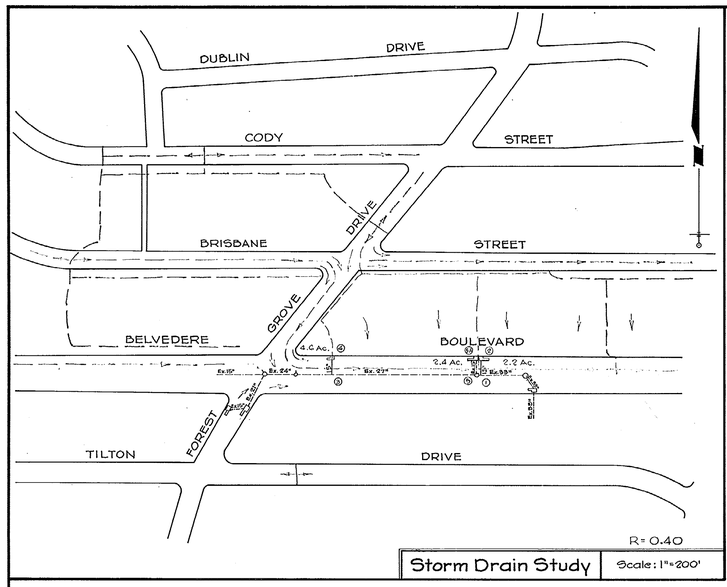

Storm Drain Study | Scale: 1"=200'

GENERAL NOTES

1. All storm drains shall be constructed in accordance with the latest Edition of the General Specifications of Maryland State Roads Commission and Montgomery County.
2. Types of structures refer to the Standard Storm Drainage Details of the W.S.S.C., Maryland State Roads Commission and Montgomery County, unless otherwise noted.
3. Where the drop on the main line through a structure can be accommodated by an invert slope of 1½:1 or flatter, a rounded channel lined with sewer brick on edge shall be built to the crown of the pipes.
4. Information concerning underground utilities was obtained from available records, but the Contractor must determine the exact location and elevations of the mains by digging test pits by hand at all utility crossings, well in advance of trenching. If clearances are less than shown on this plan or six (6) inches, whichever is less, contact Washington Suburban Sanitary Commission before proceeding with construction.

PIPE SCHEDULE		
SIZE	TYPE	LENGTH
15"	RCP CL. V	72'

STRUCTURE SCHEDULE							
No.	Type		W	Top Dn.	Top Up	℄ Station	Remarks
1	15"X 33" Field Connection					See Plan	W.S.S.C. Standard
2	B-10	Inlet	2.5-0	Match ex. curb		See Plan	W.S.S.C. Standard
3	B	Manhole	48"sq.	Match ex. ground		See Plan	W.S.S.C. Standard
4	B-20	Inlet	2.5-0	Match ex. curb		See Plan	W.S.S.C. Standard

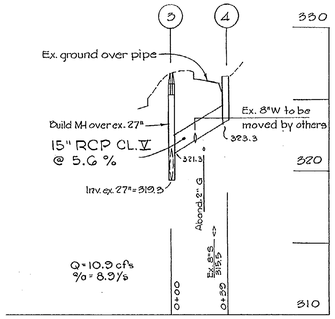

8" water to be moved at expense of Montgomery County Dept. of Public Works

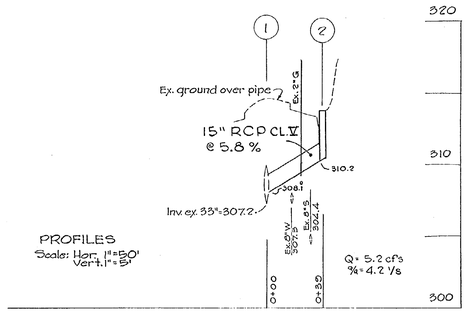

PROFILES
Scale: Hor. 1"=50'
Vert. 1"=5'

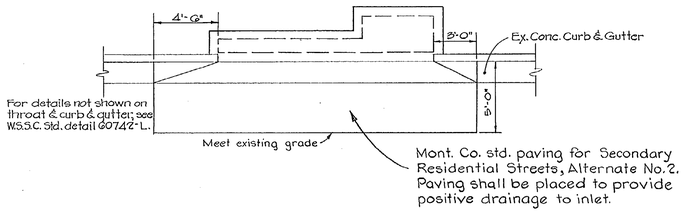

PAVING PATCH DETAIL
SCALE: 1"=5'

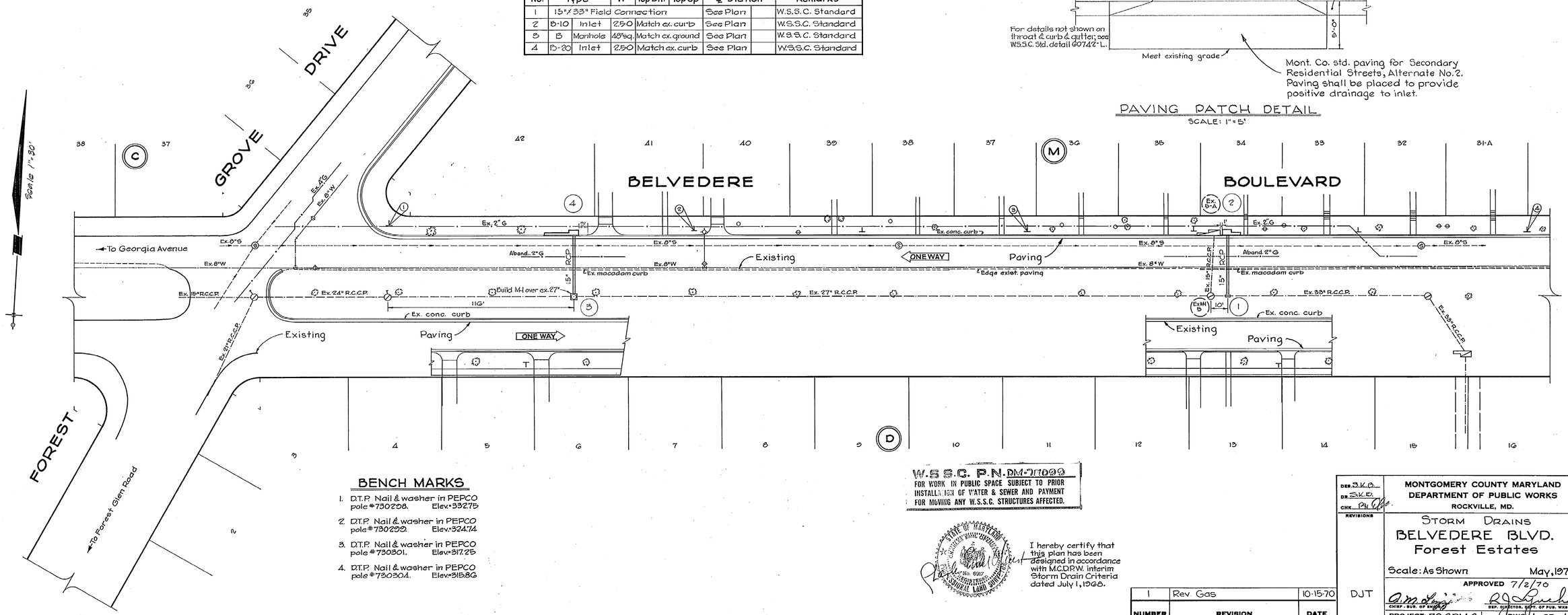

BENCH MARKS

1. D.T.P. Nail & washer in PEPCO pole #730298. Elev.=332.75
2. D.T.P. Nail & washer in PEPCO pole #730299. Elev.=324.74
3. D.T.P. Nail & washer in PEPCO pole #730301. Elev.=317.25
4. D.T.P. Nail & washer in PEPCO pole #730304. Elev.=318.86

W.S.S.C. P.N. DM-071099
FOR WORK IN PUBLIC SPACE SUBJECT TO PRIOR INSTALLATION OF WATER & SEWER AND PAYMENT FOR MOVING ANY W.S.S.C. STRUCTURES AFFECTED.

STATE OF MARYLAND — REGISTERED PROFESSIONAL ENGINEER — No. 6917 — PROFESSIONAL LAND SURVEYOR

I hereby certify that this plan has been designed in accordance with MCDPW. interim Storm Drain Criteria dated July 1, 1968.

NUMBER	REVISION	DATE	
1	Rev. Gas	10-15-70	DJT

DES. S.K.O.
DR. S.K.O.
CHK. [illegible]
REVISIONS

MONTGOMERY COUNTY MARYLAND
DEPARTMENT OF PUBLIC WORKS
ROCKVILLE, MD.

STORM DRAINS
BELVEDERE BLVD.
Forest Estates

Scale: As Shown — May, 1970
APPROVED 7/2/70
CHIEF, BUR. OF ENGINEERING — DEP. DIRECTOR, DEPT. OF PUB. WKS.
PROJECT: 70-SDM-8 — DWG. 1 OF 1

SD FILE NO. 42

CE 487-41-1

Maryland State Archives

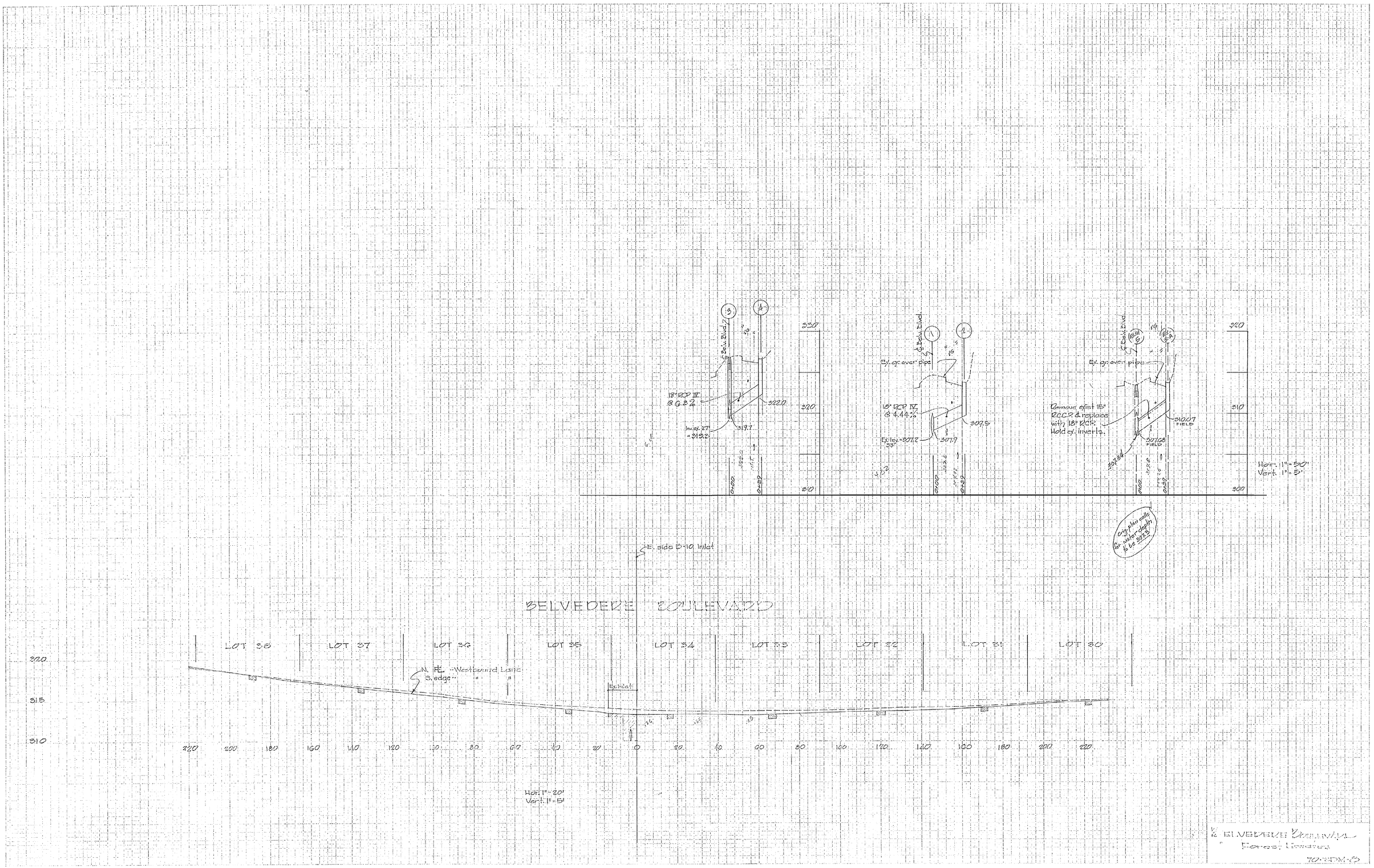

SD FILE NO. 48

No. 42

CE 487-41-2

BRISBANE DRIVE

STREET

GROVE

FOREST

BELVEDERE

BOULEVARD

10' Path

MACADAM PAVEMENT

SURVEY BASELINE

D.T.P. NEW IN PEPCO POLE 730298 ELEV.= 332.75

D.T.P. NEW IN PEPCO POLE 730299 ELEV.= 326.92

D.T.P. NEW IN PEPCO POLE 730301 ELEV.= 317.25

D.T.P. NEW IN PEPCO POLE 730304 ELEV.= 310.86

Lot 6 BLD

NUMBER	REVISION	DATE

DRB: _____
DR: _____
CHK: _____
REVISIONS

MONTGOMERY COUNTY MARYLAND
DEPARTMENT OF PUBLIC WORKS
ROCKVILLE, MD.

BELVEDERE BLVD.

Forest Estates

Scale: 1"=30' April, 1970

APPROVED

CHIEF - SUB. OF ENG'G. DEP. DIRECTOR, DEPT. OF PUB. WKS.

PROJECT: 70-SDM-8 DWG: 1 OF

SD FILE NO. 42

CE 4867 - 41 - 3

Maryland State Archives