Maryland Historical Trust

Maryland Inventory of Historic Properties Number: CE-1492

Name: #7041 / MD 273 over Little Northeast Creek

The bridge referenced herein was inventoried by the Maryland State Highway Administration as part of the Historic Bridge Inventory, and SHA provided the Trust with eligibility determinations in February 2001. The Trust accepted the Historic Bridge Inventory on April 3, 2001. The bridged received the following determination of eligibly.

MARYLAND HISTORICAL TRUST

Eligibility Recommended _____ Eligibility Not Recommended ___X___

Criteria: ____A ____B ____C ____D Considerations: ___A ___B ___C ___D ___E ___F ___G __None

Comments:_____

_____

_____

Reviewer, OPS:__Anne E. Bruder_____ Date:__3 April 2001_____

Reviewer, NR Program:_Peter E. Kurtze_____ Date:___3 April 2001_____

MARYLAND INVENTORY OF HISTORIC BRIDGES
HISTORIC BRIDGE INVENTORY
MARYLAND STATE HIGHWAY ADMINISTRATION/
MARYLAND HISTORICAL TRUST

MHT No. CE-1492

SHA Bridge No. 7041 **Bridge name** MD 273 over Little Northeast Creek

LOCATION:
Street/Road name and number [facility carried] MD 273 (Telegraph Road)

City/town Calvert **Vicinity** X

County Cecil

This bridge projects over: Road ____ **Railway** ____ **Water** X **Land** ____

Ownership: State X **County** ____ **Municipal** ____ **Other** ____

HISTORIC STATUS:
Is the bridge located within a designated historic district? Yes ____ **No** X
National Register-listed district ____ **National Register-determined-eligible district** ____
Locally-designated district ____ **Other** ____

Name of district ____

BRIDGE TYPE:
Timber Bridge ____:
Beam Bridge ____ **Truss -Covered** ____ **Trestle** ____ **Timber-And-Concrete** ____

Stone Arch Bridge ____

Metal Truss Bridge ____

Movable Bridge ____:
Swing ____ **Bascule Single Leaf** ____ **Bascule Multiple Leaf** ____
Vertical Lift ____ **Retractile** ____ **Pontoon** ____

Metal Girder ____:
Rolled Girder ____ **Rolled Girder Concrete Encased** ____
Plate Girder ____ **Plate Girder Concrete Encased** ____

Metal Suspension ____

Metal Arch ____

Metal Cantilever ____

Concrete X:
Concrete Arch ____ **Concrete Slab** ____ **Concrete Beam** X **Rigid Frame** ____
Other ____ **Type Name** ____

CE-1492

DESCRIPTION:

Setting: Urban _____ **Small town** _____ **Rural** ___X___

Describe Setting:

Bridge No. 7041 carries MD 273 (Telegraph Road) over Little Northeast Creek in Cecil County. MD 273 runs east-west and Little Northeast Creek flows north-south. The bridge is located in the vicinity of Calvert and is surrounded by farmland.

Describe Superstructure and Substructure:

Bridge No. 7041 is a 1-span, 2-lane, concrete beam bridge. The bridge was originally built in 1931, and it was widened 24 feet on the north side with a prestressed concrete beam section in 1973. The structure is 26 feet long and has a clear roadway width of 45 feet. The out-to-out width is 46 feet, 9 inches. The original portion of the superstructure consists of five (5) T-beams which support a concrete slab and w-section guard rails. The beams measure 35 inches x 19 inches and are spaced 6 feet apart. The slab, an integral part of the T-beam, measures 16 inches thick, and it has a bituminous wearing surface. The roadway approaches are sloped down to the bridge and contain w-section guard rails. The substructure consists of two (2) concrete abutments. There are four (4) flared concrete wing walls. The bridge has a sufficiency rating of 95.8.

According to the 1995 inspection report, this structure is in satisfactory condition with structural elements showing only minor deterioration. The concrete beams have cracking and spalling. One (1) beam has exposed reinforcing bars. The prestressed concrete beams also have some cracking. The asphalt wearing surface has slight rutting, and the concrete is cracking in both the abutments and wing walls.

Discuss Major Alterations:

The bridge was widened with the addition of a prestressed concrete beam section in 1973. At that time, the original parapets were removed and replaced with w-section guard rails. The inspection report from 1995 indicates that the east abutment was repaired but does not specify the nature of the repairs.

HISTORY:

WHEN was the bridge built: 1931

This date is: Actual ___X___ **Estimated** _____

Source of date: Plaque ____ **Design plans** ___ **County bridge files/inspection form** ___

Other (specify): State Highway Administration bridge files/inspection form

WHY was the bridge built?

The bridge was constructed in response to the need for a more efficient transportation network and increased load capacity.

WHO was the designer?

Unknown

WHO was the builder?

Unknown

WHY was the bridge altered?

The bridge was altered to correct functional or structural deficiencies.

Was this bridge built as part of an organized bridge-building campaign?

Unknown

SURVEYOR/HISTORIAN ANALYSIS:

This bridge may have National Register significance for its association with:
A - Events _____ B- Person _____
C- Engineering/architectural character _____

The bridge does not have National Register significance.

Was the bridge constructed in response to significant events in Maryland or local history?

The earliest concrete beam bridges in the nation were deck girder spans that featured concrete slabs supported by a series of longitudinal concrete beams. This method of construction was conceptually quite similar to the traditional timber beam bridge which had found such widespread use both in Europe and in America. Developed early in the twentieth century, deck girder spans continued to be widely used in 1920 when noted bridge engineer Milo Ketchum wrote *The Design of Highway Bridges of Steel, Timber and Concrete* (Ketchum 1920).

Although visually similar to deck girder bridges, the T-beam span features a series of reinforced concrete beams that are integrated into the concrete slab, forming a monolithic mass appearing in cross section like a series of upper-case "T"s connected at the top. Thaddeus Hyatt is believed to have been the first to come upon the idea of the T-beam when he was studying reinforced concrete in the 1850s, but the first useful T-beam was developed by the Belgian Francois Hennebique at the turn of the present century (Lay 1992:293). The earliest references to T-beam bridges refer to the type as concrete slab and beam construction, a description that does not distinguish the T-beam design from the concrete deck girder. Henry G. Tyrrell was perhaps the first American bridge engineer to use the now standard term "T-beam" in his treatise *Concrete Bridges and Culverts*, published in 1909. Tyrrell commented that "it is permissible and good practice in designing small concrete beams which are united by slabs, to consider the effect of a portion of the floor slab and to proportion the beams as T-beams" (Tyrrell 1909:186).

By 1920, reinforced concrete, T-beam construction had found broad application in standardized bridge design across the United States. In his text, *The Design of Highway Bridges of Steel, Timber and Concrete*, Milo S. Ketchum included drawings of standard T-beam spans recommended by the U.S. Bureau of Public Roads as well as drawings of T-beam bridges built by state highway departments in Ohio, Michigan, Illinois, and Massachusetts (Ketchum 1920). By the 1930s the T-beam bridge was widely built in Maryland and Virginia.

Maryland's roads and bridge improvement programs mirrored economic cycles. The first road improvement of the State Roads Commission was a 7 year program, starting with the Commission's

establishment in 1908 and ending in 1915. Due to World War I, the period from 1916-1920 was one of relative inactivity; only roads of first priority were built. Truck traffic resulting from war related factories and military installations generated new, heavy traffic unanticipated by the builders of the early road system. From 1920-1929, numerous highway improvements occurred in response to the increase in Maryland motor vehicles from 103,000 in 1920 to 320,000 in 1929, with emphasis on the secondary system of feeder roads which moved traffic from the primary roads built before World War I. After World War I, Maryland's bridge system also was appraised as too narrow and structurally inadequate for the increasing traffic , with plans for an expanded bridge program to be handled by the Bridge Division, set up in 1920. In 1920 under Chapter 508 of the Acts of 1920 the State issued a bond of $3,000,000.00 for road construction; the primary purpose of these monies was to meet the state obligations involving the construction of rural post roads. The secondary purpose of these monies was to fund (with an equal sum from the counties) the building of lateral roads. The number of hard surfaced roads on the state system grew from 2000 in 1920 to 3200 in 1930. By 1930, Maryland's primary system had been inadequate to the huge freight trucks and volume of passenger cars in use, with major improvements occurring in the late 1930's. Most improvements to local roads waited until the years after World War I.

In the early years, there was a need to replace the numerous single lane timber bridges. Walter Wilson Crosby, Chief Engineer, stated in 1906, "the general plan has been to replace these [wood bridges] with pipe culverts or concrete bridges and thus forever do away with the further expense of the maintenance of expensive and dangerous wooden structures." Within a few years, readily constructed standardized bridges of concrete were being built throughout the state.

In 1930, the roadway width for all standard plan bridges was increased to 27 feet in order to accommodate the increasing demands of automobile and truck traffic (State Roads Commission 1930). The range of span lengths remained the same, but there were some changes designed to increase the load bearing capacities. The reinforcing bars increased in thickness. Visually, the 1930 design can be distinguished from its predecessors by the pierced concrete railing that was introduced at this time.

In 1933, a new set of standard plans were introduced by the State Roads Commission. This time their preparation was not announced in the Report; new standard plans were by this time nothing special - they had indeed become standard. Once again accommodating the ever-increasing demands of traffic, the roadway was increased, this time to 30 feet. The slab span's reinforcing bars remained the same diameter but were placed closer together to achieve still more load capacity.

When the bridge was built and/or given a major alteration, did it have a significant impact on the growth and development of the area?

There is no evidence that the construction of this bridge had a significant impact on the growth and development of this area.

Is the bridge located in an area which may be eligible for historic designation and would the bridge add to or detract from the historic/visual character of the potential district?

The bridge is located in an area which does not appear to be eligible for historic designation.

Is the bridge a significant example of its type?

A significant example of a concrete beam bridge should possess character-defining elements of its type, and be readily recognizable as an historic structure from the perspective of the traveler. The integrity of distinctive features visible from the roadway approach, including parapet walls or railings, is important in structures which are common examples of their type. In addition, the structure must be in excellent condition. The integrity of the important elements and distinctive features visible from the roadway has been altered with the removal of the original parapets. They were replaced with w-section guard rails during the 1973 widening of the bridge. Because of this, the structure is an undistinguished example of a concrete beam bridge.

Does the bridge retain integrity of important elements described in Context Addendum?

This bridge was altered in 1973, resulting in the loss of such character-defining elements as the original parapets.

Is the bridge a significant example of the work of a manufacturer, designer, and/or engineer?

This bridge is not a significant example of the work of a manufacturer, designer, and/or engineer.

Should the bridge be given further study before an evaluation of its significance is made?

No further study of this bridge is required to evaluate its significance.

BIBLIOGRAPHY:

County inspection/bridge files _____ **SHA inspection/bridge files** ___X___
Other (list):

Ketchum, Milo S.
1908 *The Design of Highway Bridges and the Calculation of Stresses in Bridge Trusses.* The Engineering News Publishing Co., New York.

1920 *The Design of Highway Bridges of Steel, Timber and Concrete.* Second edition. McGraw-Hill Book Company, New York.

Lay, Maxwell Gordon
1992 *Ways of the World: A History of the World's Roads and of the Vehicles That Used Them.* Rutgers University Press, New Brunswick, New Jersey.

Luten, Daniel B.
1912 Concrete Bridges. *American Concrete Institute Proceedings* 8:631-640.

1917 *Reinforced Concrete Bridges.* National Bridge Company, Indianapolis, Indiana.

Maryland State Roads Commission
1930a *Report of the State Roads Commission for the Years 1927, 1928, 1929 and 1930.* State of Maryland, State Roads Commission, Baltimore.

1930b *Standard Plans.* State of Maryland, State Roads Commission, Baltimore.

CE-1492

Taylor, Frederick W., Sanford E. Thompson, and Edward Smulski
1939 *Reinforced-Concrete Bridges with Formulas Applicable to Structural Steel and Concrete.* John Wiley & Sons, Inc., New York.

Tyrrell, H. Grattan
1909 *Concrete Bridges and Culverts for Both Railroads and Highways.* The Myron C. Clark Publishing Company, Chicago and New York.

SURVEYOR:

Date bridge recorded 3/5/97
Name of surveyor Caroline Hall/Eric F. Griffitts
Organization/Address P.A.C. Spero & Co., 40 W. Chesapeake Avenue, Baltimore, MD 21204
Phone number (410) 296-1685 **FAX number** (410) 296-1670

Maryland Historic Highway Bridges
Bridge Type Concrete Beam
MHT # CE-1492
Map Rising Sun A-12
County Cecil
Bridge # and name 7041
MD 273 over Little Northeast Creek

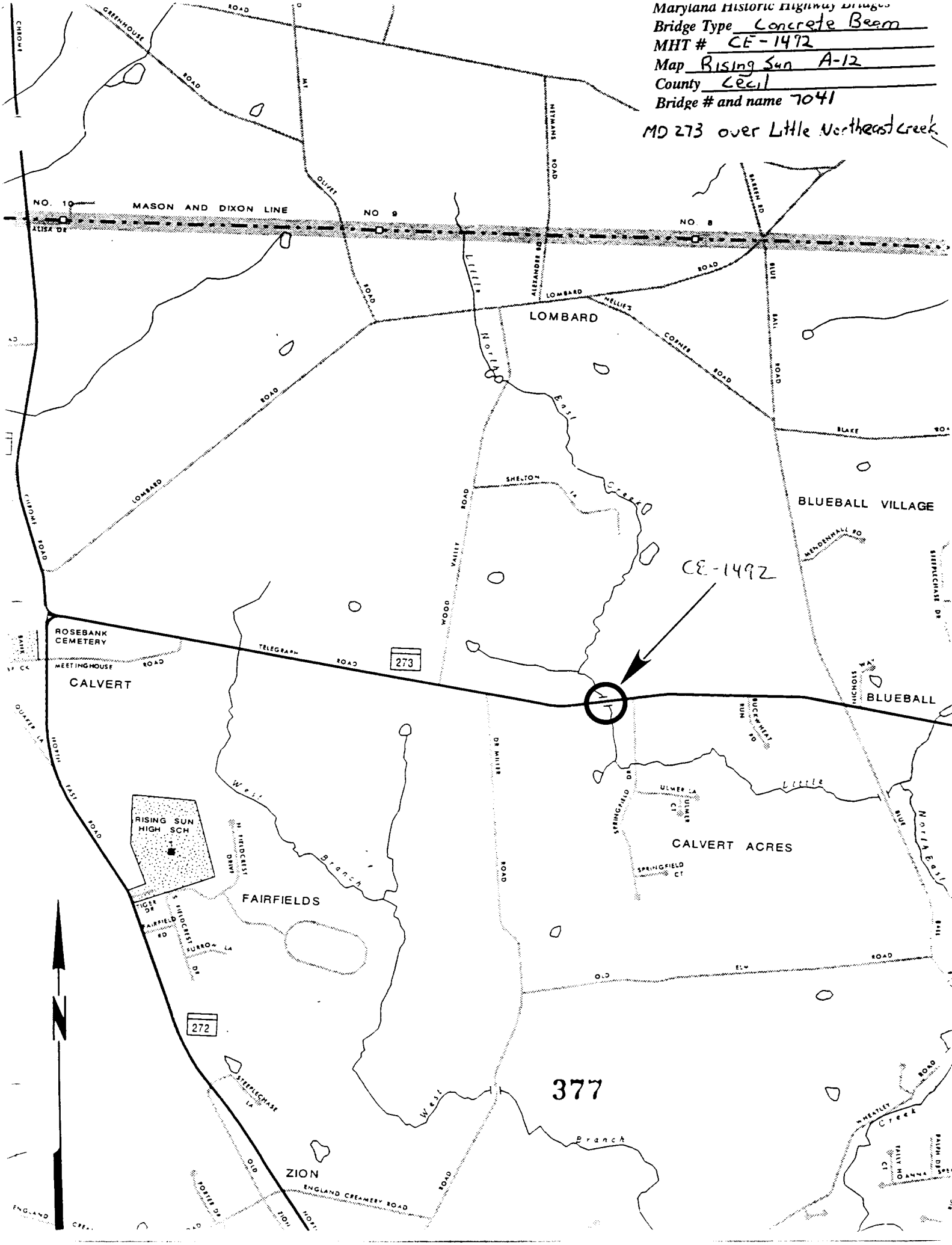

1. CE - 1492
2. MD 273 over Little Northeast Creek (7041)
3. Cecil
4. Eric Griffiths
5. 3-97
6. MD SHPO
7. EAST Approach
8. 1 of 6

1. CE 1492
2. MD 273 over Little Northeast Creek
3. Cecil (7041)
4. Eric Griffiths
5. 3-97
6. MD SHPO
7. West Approach
8. 2 of 6

1. CE-1492
2. MD 273 over Little Northeast Creek (7041)
3. Cecil
4. Eric Griffitts
5. 3-97
6. MD-SHPO
7. Detail under Bridge
8. 3 of 6

1. CE-1492

2. MD 273 over Little Northeast Creek (7041)

3. Cecil

4. Eric Griffiths

5. 3-97

6. MD SHPO

7. North elevation

8. 4 of 4

1. CE-1492
2. MD 273 over Little Northeast Creek (7041)
3. Cecil
4. Eric Griffiths
5. 3-97
6. MD SHPO
7. South Elevation
8. 5 of 6

1. CE-1492
2. MD 273 over Little Northeast Creek (9041)
3. Cecil
4. Eric Griffiths
5. 3-97
6. MD SHPO
7. North Elevation
8. 6 of 6

9600141

INDIVIDUAL PROPERTY/DISTRICT
MARYLAND HISTORICAL TRUST
INTERNAL NR-ELIGIBILITY REVIEW FORM

Property/District Name: Bridge 7041 Survey Number: CE-1492

Project: MD 273 over Little Northeast Creek Agency: FHWA/SHA

Site visit by MHT Staff: X no ___ yes Name _____ Date _____

Eligibility recommended ___ Eligibility **not** recommended X

Criteria: ___A ___B ___C ___D Considerations: ___A ___B ___C ___D ___E ___F ___G ___None

Justification for decision: (Use continuation sheet if necessary and attach map)

Based on information provided by SHA, Bridge 7041, MD 273 over Little Northeast Creek in the vicinity of Blue Ball in Cecil County, does not appear to meet the National Register Criteria for individual listing. The single span concrete beam bridge was constructed in 1931 to standards designed by the State Roads Commission in 1928. It would have been one of many designed to these standards throughout the state and did not embody any unique design or engineering concepts, though may have been a good example of the type. However, the 24-foot wide bridge was widented in 1973 by 23 feet. At this time, the original parapets were removed and the wingwalls and abutments were altered. Due to this substantial alteration, the bridge no longer retains integrity and would not be eligible under Criterion C. It is not known to have been associated with any significant event or person, and thus is unlikely to be eligible under Criteria A and B. In addition, it is not located in any known historic istrict.

(This bridge was not included in the survey of historic bridges currently being undertaken by SHA due to its substantial loss of integrity. There will be no inventory form forthcoming.)

Documentation on the property/district is presented in: Project File

Prepared by: Stacie Webb, SHA

Elizabeth Hannold — February 27, 1996
Reviewer, Office of Preservation Services — Date

NR program concurrence: ✓ yes ___ no ___ not applicable

[signature] — 2-26-96
Reviewer, NR program — Date

Survey No. CE-1492

MARYLAND COMPREHENSIVE HISTORIC PRESERVATION PLAN DATA - HISTORIC CONTEXT

I. Geographic Region:

x	Eastern Shore	(all Eastern Shore counties, and Cecil)
	Western Shore	(Anne Arundel, Calvert, Charles, Prince George's and St. Mary's)
	Piedmont	(Baltimore City, Baltimore, Carroll, Frederick, Harford, Howard, Montgomery)
	Western Maryland	(Allegany, Garrett and Washington)

II. Chronological/Developmental Periods:

	Paleo-Indian	10000-7500 B.C.
	Early Archaic	7500-6000 B.C.
	Middle Archaic	6000-4000 B.C.
	Late Archaic	4000-2000 B.C.
	Early Woodland	2000-500 B.C.
	Middle Woodland	500 B.C. - A.D. 900
	Late Woodland/Archaic	A.D. 900-1600
	Contact and Settlement	A.D. 1570-1750
	Rural Agrarian Intensification	A.D. 1680-1815
	Agricultural-Industrial Transition	A.D. 1815-1870
	Industrial/Urban Dominance	A.D. 1870-1930
X	Modern Period	A.D. 1930-Present
	Unknown Period (___ prehistoric	___ historic)

III. Prehistoric Period Themes:

	Subsistence
	Settlement
	Political
	Demographic
	Religion
	Technology
	Environmental Adaption

IV. Historic Period Themes:

	Agriculture
X	Architecture, Landscape Architecture, and Community Planning
	Economic (Commercial and Industrial)
	Government/Law
	Military
	Religion
	Social/Educational/Cultural
	Transportation

V. Resource Type:

Category: Structure

Historic Environment: Rural

Historic Function(s) and Use(s): Transportation-vehicular

Known Design Source: State Roads Commission 1928 standards

Attachment 2
Bridge 7041
Md 273 over Little Northeast Creek
Bay View Quad CE-1492

FED. ROAD DIV. NO.	STATE	FED. AID PROJ. NO.	SHEET NO.
2	MD.		30

CE-1492

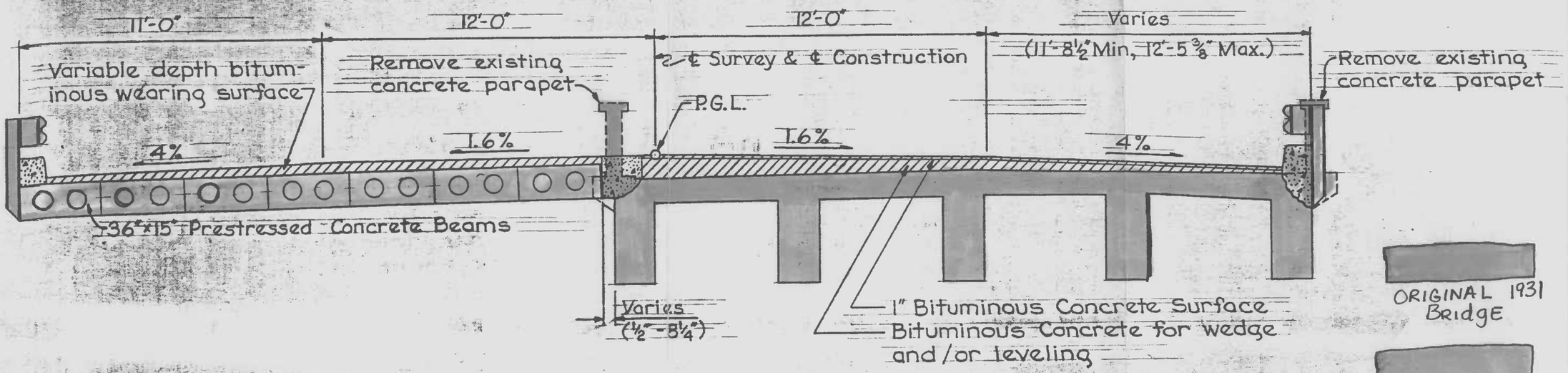

TYPICAL SECTION

Scale: ¼" = 1'-0"

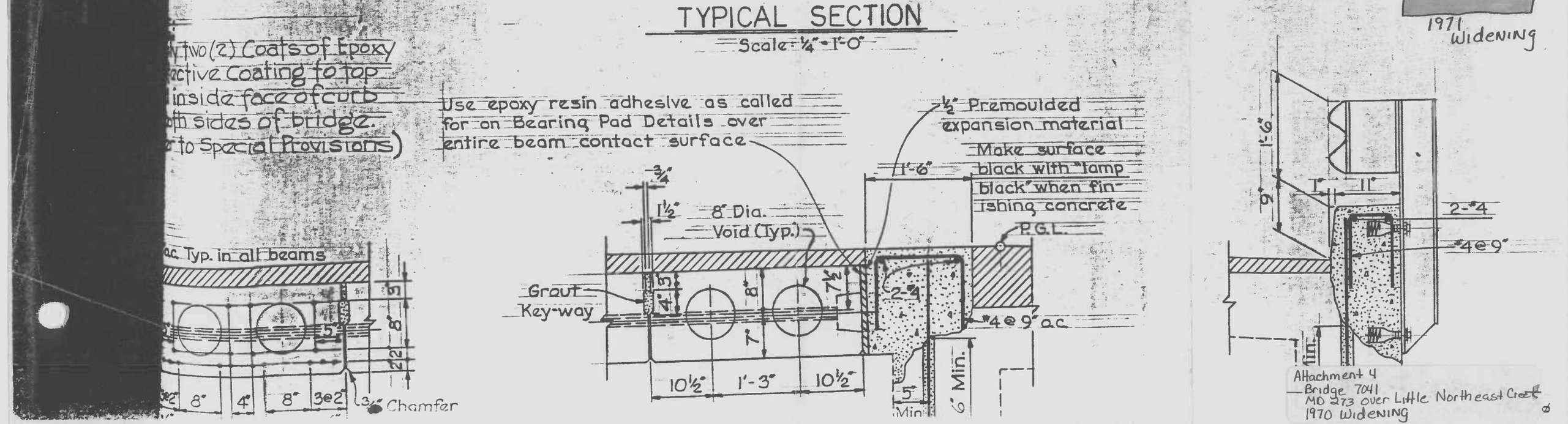

Attachment 4
Bridge 7041
MD 273 over Little Northeast Creek
1970 Widening

DISTRICT #2

CE-1492

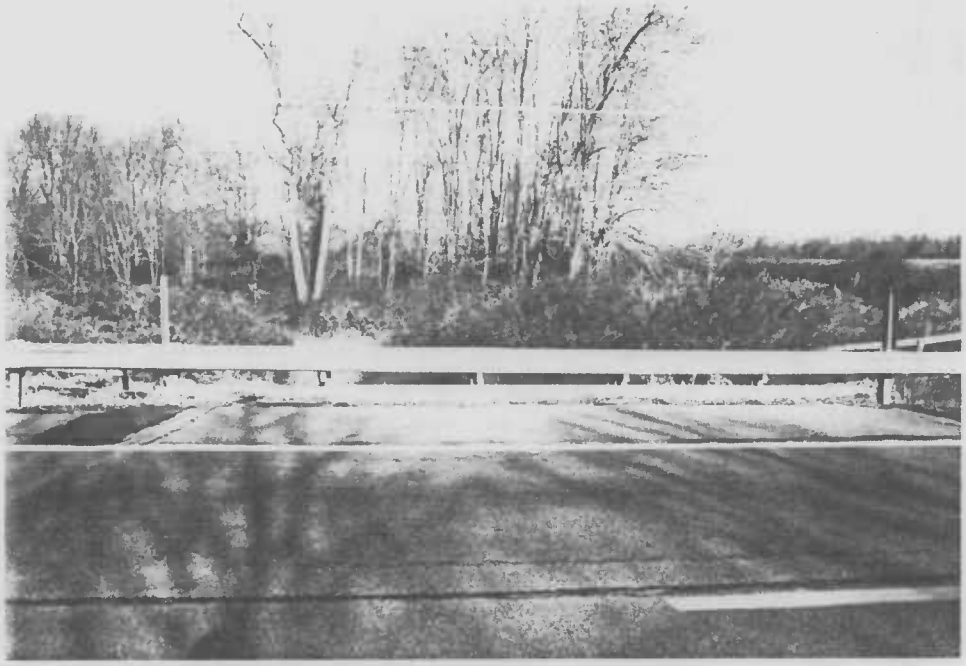

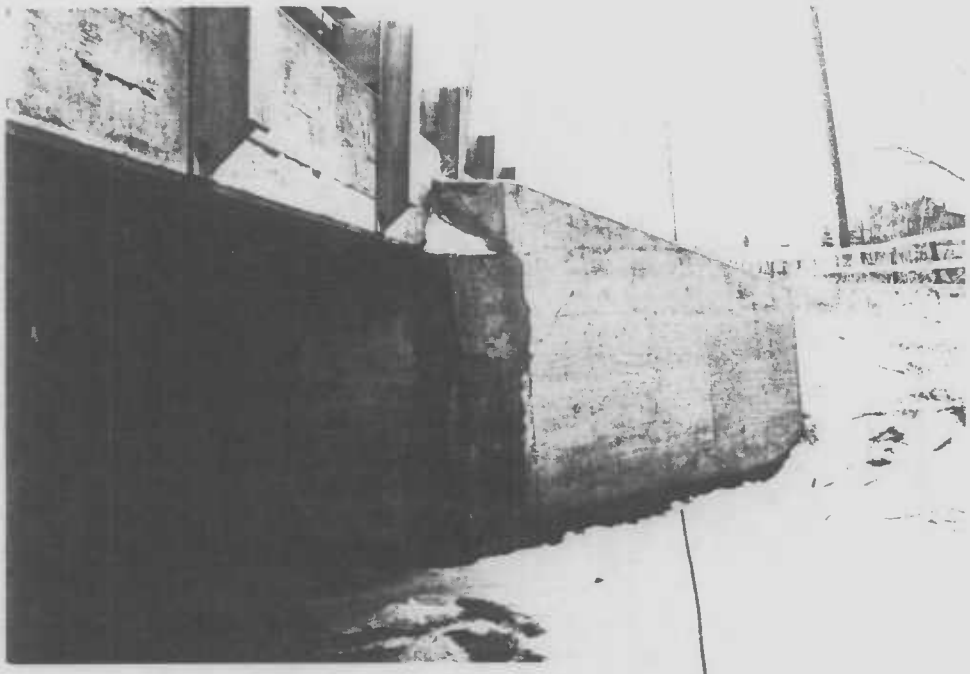

Bridge No. 7041

Attachment 3
Bridge 7041
Md 273 over Little Northeast Creek
Photographs