Maryland Historical Trust

Maryland Inventory of Historic Properties Number: WA-I-344.

Name: CLOPPER RD. OVER ANTIETAM CREEK.

The bridge referenced herein was inventoried by the Maryland State Highway Administration as part of the Historic Bridge Inventory, and SHA provided the Trust with eligibility determinations in February 2001. The Trust accepted the Historic Bridge Inventory on April 3, 2001. The bridged received the following determination of eligibly.

MARYLAND HISTORICAL TRUST

Eligibility Recommended ___X____ Eligibility Not Recommended _____

Criteria: ____A ____B ____C ____D Considerations: __A __B __C __D __E __F __G __None

Comments: PREVIOUSLY DETERMINED ELIGIBLE. WASHINGTON COUNTY TO REPLACE.

Reviewer, OPS: __Anne E. Bruder_____ Date: __3 April 2001_____

Reviewer, NR Program: _Peter E. Kurtze_____ Date: ___3 April 2001_____

MARYLAND INVENTORY OF HISTORIC BRIDGES
HISTORIC BRIDGE INVENTORY
MARYLAND STATE HIGHWAY ADMINISTRATION/
MARYLAND HISTORICAL TRUST

MHT No. WA-I-344

SHA Bridge No. W 2521 **Bridge name** Clopper Road over Antietam Creek (Clopper Road Bridge)

LOCATION:
Street/Road name and number Clopper Road

City/town Leitersburg **Vicinity** X

County Washington

This bridge projects over: Road __ **Railway** ____ **Water** X **Land** ____

Ownership: State ____ **County** X **Municipal** ____ **Other** ____

HISTORIC STATUS:
Is the bridge located within a designated historic district? **Yes** ____ **No** X
National Register-listed district ____ **National Register-determined-eligible district** ____
Locally-designated district ____ **Other** ____

Name of district ____

BRIDGE TYPE:
Timber Bridge _:
Beam Bridge ____ **Truss -Covered** ____ **Trestle** ____ **Timber-And-Concrete** ____

Stone Arch Bridge ____

Metal Truss Bridge ____

Movable Bridge :
Swing ____ **Bascule Single Leaf** ____ **Bascule Multiple Leaf** ____
Vertical Lift ____ **Retractile** ____ **Pontoon** ____

Metal Girder ____:
Rolled Girder ____ **Rolled Girder Concrete Encased** ____
Plate Girder ____ **Plate Girder Concrete Encased** ____

Metal Suspension ____

Metal Arch ____

Metal Cantilever ____

Concrete X :
Concrete Arch X **Concrete Slab** ____ **Concrete Beam** ____ **Rigid Frame** ____

Other ____ **Type Name** ____

WA-I-344

DESCRIPTION:

Setting: Urban _____ **Small town** _____ **Rural** ____X____

Describe Setting:

Bridge W 2521 carries Clopper Road over Antietam Creek in Washington County. Clopper Road runs north-south and Antietam Creek flows southwest. The bridge is located in the vicinity of Leitersburg, and is surrounded by woods and a few scattered single-family homes.

Describe Superstructure and Substructure:

Bridge W 2521 is a single-span, 1-lane, concrete arch bridge. The bridge was originally built in 1908, and the concrete parapets were replaced with metal railings at an unknown date. The structure is 111 feet long and has a clear roadway width of 13 feet 2 inches; there are no sidewalks. The out-to-out width is 15 feet 6 inches. The superstructure consists of 1 arch that supports a concrete deck and metal rails. The arch spans 70 feet and is of closed spandrel arch design. The concrete deck has a bituminous wearing surface. The structure has metal-pipe railings and the north roadway approach has metal guardrails while the southern approach has wooden rails. An early inspection reported noted a date plaque on the parapet that stated that the bridge was built in 1908 by the Nelson Merydith Company of Chambersburg, Pennsylvania. The substructure consists of 2 concrete abutments. There are 4 flared concrete wingwalls. The bridge is posted for 10 tons at 15 miles per hour, and has a sufficiency rating of 14.2.

According to a 1995 inspection report, this structure was in poor condition with heavy deterioration of the substructure. The asphalt wearing surface has minor deterioration. Large cracks, unsound regions, deteriorated areas, and spalling exist in the concrete. The arches have extensive cracking and efflorescence. The abutments and wingwalls have large cracks and are spalling. Also, the metal railing has surface erosion and has been determined substandard.

Discuss Major Alterations:

There have been no major alterations to this structure.

HISTORY:

WHEN was the bridge built: ____1908____
This date is: Actual _____X_____ **Estimated** _____
Source of date: Plaque __X__ **Design plans** _____ **County bridge files/inspection form** ____**Other (specify):**
_____

WHY was the bridge built?
The bridge was constructed to provide a more efficient transportation network and increased load capacity.
WHO was the designer? Nelson Merydith Company
WHO was the builder? Nelson Merydith Company
WHY was the bridge altered?
The bridge was altered to correct functional or structural deficiencies
Was this bridge built as part of an organized bridge-building campaign?
There is no evidence that the bridge was built as part of an organized bridge building campaign.

SURVEYOR/HISTORIAN ANALYSIS:

This bridge may have National Register significance for its association with:
A - Events _____ **B- Person** _____
C- Engineering/architectural character ___X_____

This bridge was determined eligible by the Interagency Review Committee in February 1996.

Was the bridge constructed in response to significant events in Maryland or local history?

The advent of modern concrete technology fostered a renaissance of arch bridge construction in the United States. Reinforced concrete allowed the arch bridge to be constructed with much more ease than ever before and maintained the load-bearing capabilities of the form. As the structural advantages of reinforced concrete became apparent, the heavy, filled barrel of the arch was lightened into ribs. Spandrel walls were opened, to give a lighter appearance and to decrease dead load. This enabled the concrete arch to become flatter and multi-centered, with longer spans possible. Designers were no longer limited to the semicircular or segmental arch form of the stone arch bridge. The versatility of reinforced concrete permitted development of a variety of economical bridges for use on roads crossing small streams and rivers.

Maryland's roads and bridge improvement programs mirrored economic cycles. The first road improvement of the State Roads Commission was a 7-year program, starting with the Commission's establishment in 1908 and ending in 1915. Due to World War I, the period from 1916-1920 was one of relative inactivity; only roads of first priority were built. Truck traffic resulting from war related factories and military installations generated new, heavy traffic unanticipated by the builders of the early road system. From 1920-1929, numerous highway improvements occurred in response to the increase in Maryland motor vehicles from 103,000 in 1920 to 320,000 in 1929, with emphasis on the secondary system of feeder roads that moved traffic from the primary roads built before World War I. After World War I, Maryland's bridge system also was appraised as too narrow and structurally inadequate for the increasing traffic, with plans for an expanded bridge program to be handled by the Bridge Division, set up in 1920. In 1920 under Chapter 508 of the Acts of 1920 the State issued a bond of $3,000,000.00 for road construction; the primary purpose of these monies was to meet the state obligations involving the construction of rural post roads. The secondary purpose of these monies was to fund (with an equal sum from the counties) the building of lateral roads. The number of hard surfaced roads on the state system grew from 2000 in 1920 to 3200 in 1930. By 1930, Maryland's primary system had been inadequate to the huge freight trucks and volume of passenger cars in use, with major improvements occurring in the late 1930's. Most improvements to local roads waited until the years after World War I.

As the nation's automotive traffic increased in the early twentieth century, local road networks were consolidated, and state highway departments were formed to supervise the construction and improvement of state roads. With a diverse topographical domain encompassing numerous small and large crossings, Maryland engineers quickly recognized the need for expedient design and construction through the standardization of bridge designs.

The concept and practice of standardization was one of the most important developments in engineering of the twentieth century. In Maryland, as in the rest of the nation, the standardized concrete types became the predominant bridge types built. In the period 1911 to 1920 (the decade in which standardized plans were introduced), beams and slabs constituted 65 percent and arches 35 percent of the extant 29 bridges built in Maryland. In the following decade, 1921-1930, the beam (now the T-beam) and slab increased to 73 percent and the arch had declined to 27 percent of the 129 extant bridges; in the next decade (1931-1940), the beam and slab achieved 82 percent and arches had further declined, constituting only 18 percent of the total of extant bridges built on state-owned roads between 1931 and 1946.

Although beam and slab bridges became the utilitarian choice, it appears that the arch was selected when aesthetics as well as other site conditions were considered. The architectural treatment of extant arch bridges supports this assessment. Many of these bridges were multiple span structures with open spandrels or masonry facing. Another decorative feature of the concrete arch bridge was an open, balustrade-style parapet. Despite the popularity of ornamental arches and the increase in use of beam and slab bridges, examples of simpler, single and multiple span closed concrete arch bridges with solid parapets continued to be constructed throughout the early twentieth century.

When the bridge was built and/or given a major alteration, did it have a significant impact on the growth and development of the area?

There is no evidence that the construction of this bridge had a significant impact on the growth and development of the area.

WA-I-344

Is the bridge located in an area that may be eligible for historic designation and would the bridge add to or detract from the historic/visual character of the potential district?

The bridge is located in an area that does not appear to be eligible for historic designation.

Is the bridge a significant example of its type?

The bridge is a significant example of its type, due to the early date of construction.

Does the bridge retain integrity of important elements described in Context Addendum?

The bridge retains the character-defining elements of its type, as defined by the Statewide Historic Bridge Context, including the closed spandrel walls, arch ribs, concrete abutments, and wingwalls.

Is the bridge a significant example of the work of a manufacturer, designer, and/or engineer?

This bridge is a significant example of the work of the Nelson Merydith Company, of Chambersburg, Pennsylvania.

Should the bridge be given further study before an evaluation of its significance is made?

No further study of this bridge is required to evaluate its significance.

BIBLIOGRAPHY:

County inspection/bridge files X **SHA inspection/bridge files** _____
Other (list):

Johnson, Arthur Newhall
1899 The Present Condition of Maryland Highways. In *Report on the Highways of Maryland.* Maryland Geological Survey, The Johns Hopkins University Press, Baltimore.

P.A.C. Spero & Company and Louis Berger & Associates
1995 Historic Highway Bridges in Maryland: 1631-1960: Historic Context Report. Maryland State Highway Administration, Maryland State Department of Transportation, Baltimore, Maryland.

Tyrrell, H. Grattan
1909 *Concrete Bridges and Culverts for Both Railroads and Highways*. The Myron C. Clark Publishing Company, Chicago and New York.

SURVEYOR:

Date bridge recorded December 1997
Name of surveyor Wallace, Montgomery & Associates / P.A.C. Spero & Company
Organization/Address P.A.C. Spero & Co., 40 W. Chesapeake Avenue, Baltimore, MD 21204
Phone number (410) 296-1635 **FAX number** (410) 296-1670

Maryland Historic Highway Bridges
Bridge Type CONCRETE ARCH
MHT# WA-I-344
Map A-8 HAGERSTOWN
County WASHINGTON WA-I-344
Bridge # and name W2521; CLOPPER RD. OVER ANTIETAM CREEK

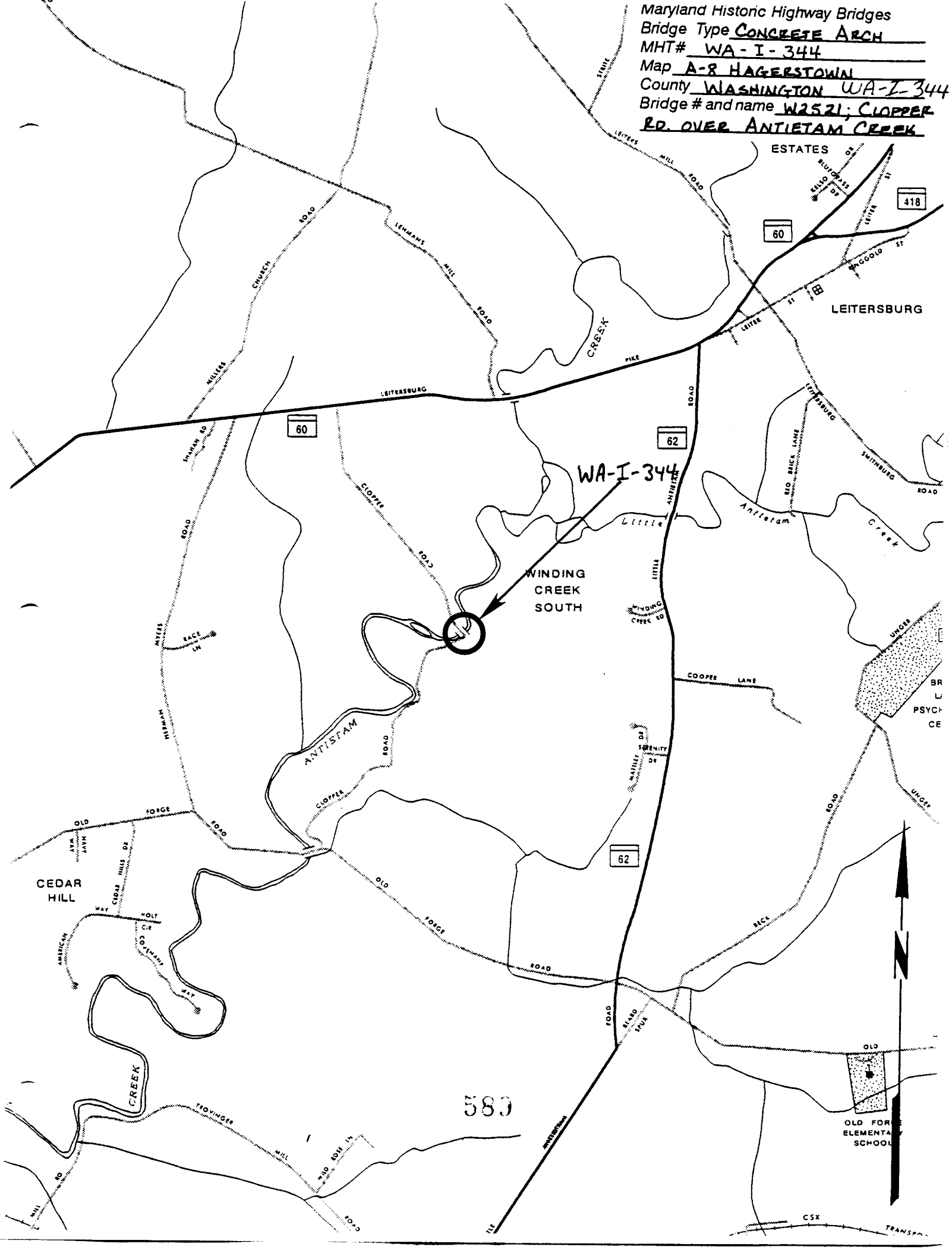

WA-I-344

[illegible]

[illegible]

WASHINGTON D.C.

CHARLES [illegible]

2/22/[illegible]

S. H. A.

SOCIAL [illegible]

[illegible] OF 4

WA-I-344

BR # 20W25 2 [illegible]

OVER AN[illegible] [illegible] CREEK

WASHINGTON [illegible]

CHARLES [illegible]

2/22/[illegible]

[illegible] 4. A

WEST ELEVATION DOWNSTREAM

2 OF 4

WA-I-344

BR#=0W25210

OVER ANTIETAM CREEK

WASHINGTON CO., MD

CHARLES ZIEGLER

2/22/95

S. H. A.

EAST ELEVATION (UPSTREAM)

3 OF 4

WA-I-344 BR # 20[illegible]252[illegible]0

OVER ANTIETAM CREEK

WASHINGTON CO., MD.

CHARLES ZIEGLER

2/22/95

S.H.A.

NORTH APPROACH

4 OF 4

INDIVIDUAL PROPERTY/DISTRICT
MARYLAND HISTORICAL TRUST
INTERNAL NR-ELIGIBILITY REVIEW FORM

Property/District Name: Clopper Road Bridge over Antietam Creek Survey Number: WA-I-344

Project: Bridge Replacement (Bridge # W 2521) Agency: FHWA/WA County DPW

Site visit by MHT Staff: X no ___ yes Name _____ Date _____

Eligibility recommended X Eligibility **not** recommended ____

Criteria: X A ___B X C ___D Considerations: ___A ___B ___C ___D ___E ___F ___G
___None

Justification for decision: (Use continuation sheet if necessary and attach map)

The Clopper Road over Antietam Creek Bridge near Leitersburg, Washington County, Maryland is a 1908 reinforced concrete arch bridge. It was constructed by the Nelson Merydith Company of Pittsburgh, Pennsylvania and is one of three concrete arch bridges by Nelson Merydith in Washington County. The bridge is a one lane, single span bridge which has a 13'-2" clear roadway with no sidewalks. There are two plaques in the endwalls of the bridge which identify the County Commissioners and the engineering company at the time of the original construction. The bridge does not appear to have been altered in the last ninety years. However, recent testing has demonstrated that the concrete is beginning to fail and Washington County wants to replace the bridge.

The bridge has been determined to be eligible for the National Register by the Interagency Historic Bridge Committee as well as by the Trust individually. The bridge is eligible under Criterion A, Events -- Transportation, as an example of expanding road system in the early twentieth century, and under Criterion C, Engineering, as an example of reinforced concrete construction. Although Nelson Merydith built several bridges, little is known about the firm or individuals who worked for the company, and therefore the bridge is not eligible under Criterion B. The bridge is also potentially eligible under Criterion D, and a Phase I archeological survey has been requested..

Documentation on the property/district is presented in: Project Review and Compliance Files and Inventory Books

Prepared by: Judith Robinson and Associates

_____ 8/17/98
Reviewer, Office of Preservation Services Date

NR program concurrence: X yes ___ no ___ not applicable

_____ 8/17/98
Reviewer, NR program Date

Survey No. WA-I-344

MARYLAND COMPREHENSIVE HISTORIC PRESERVATION PLAN DATA - HISTORIC CONTEXT

I. Geographic Region:

_____ Eastern Shore	(all Eastern Shore counties, and Cecil)
_____ Western Shore	(Anne Arundel, Calvert, Charles, Prince George's and St. Mary's)
_____ Piedmont	(Baltimore City, Baltimore, Carroll, Frederick, Harford, Howard, Montgomery)
X Western Maryland	(Allegany, Garrett and Washington)

II. Chronological/Developmental Periods:

_____ Paleo-Indian	10000-7500 B.C.
_____ Early Archaic	7500-6000 B.C.
_____ Middle Archaic	6000-4000 B.C.
_____ Late Archaic	4000-2000 B.C.
_____ Early Woodland	2000-500 B.C.
_____ Middle Woodland	500 B.C. - A.D. 900
_____ Late Woodland/Archaic	A.D. 900-1600
_____ Contact and Settlement	A.D. 1570-1750
_____ Rural Agrarian Intensification	A.D. 1680-1815
_____ Agricultural-Industrial Transition	A.D. 1815-1870
X Industrial/Urban Dominance	A.D. 1870-1930
_____ Modern Period	A.D. 1930-Present
_____ Unknown Period (___ prehistoric ___ historic)	

III. Prehistoric Period Themes:

_____ Subsistence
_____ Settlement
_____ Political
_____ Demographic
_____ Religion
_____ Technology
_____ Environmental Adaptation

IV. Historic Period Themes:

_____ Agriculture
X Architecture, Landscape Architecture, and Community Planning
_____ Economic (Commercial and Industrial)
_____ Government/Law
_____ Military
_____ Religion
_____ Social/Educational/Cultural
X Transportation

V. Resource Type:

Category: Structure
Historic Environment: Rural
Historic Function(s) and Use(s): Bridge -- transportation -- creek crossing
Known Design Source: Nelson Merydith

ADMINISTRATIVE/EXECUTIVE SUMMARY

In the fall of 1997, the Washington County, Maryland, Engineering Department, in compliance with the federally mandated Bridge Inspection Program, performed a visual inspection of the Clopper Road Bridge over Antietam Creek. It was determined at this time that the bridge was in poor condition and needed to be replaced. As this project is receiving funding through the Federal Bridge Replacement and Rehabilitation Program under the Intermodal Surface Transportation Efficiency Act (ISTEA) of 1991 (as amended), it is subject to review under Section 106 of the National Historic Preservation Act of 1966 (as amended). In October 1997, Robinson & Associates, Inc., a consulting firm specializing in architectural history and historic preservation, was retained by transportation engineers Rummel, Klepper & Kahl, LLP, to guide the Section 106 review of this project.

This report presents an amendment to the original Maryland Historical Trust (MHT) survey form for the Clopper Road Bridge (prepared in May 1975), as well as an evaluation of the bridge's eligibility for listing in the Maryland Inventory of Historic Properties and the National Register of Historic Places.

METHODOLOGY

A site visit was conducted by Robinson & Associates on March 25, 1998, at which time a windshield survey of the project area was made, and photographs were taken of the bridge and the surrounding properties as viewed from the public right-of-way on Clopper Road.

In order to fully evaluate the significance and condition of the Clopper Road Bridge, copies of all relevant existing documentation were collected. These included the MHT survey forms for the Clopper Road Bridge and three other concrete arch bridges constructed in Washington County, Maryland, by the Nelson Merydith Company (prepared in 1975 and 1978), the Maryland Inventory of Historic Bridges survey forms for the three extant Nelson Merydith Company bridges (prepared in December 1997), the two most recent inspection reports for the Clopper Road Bridge (dating to 1995 and 1997), and the Historic Context Report for Historic Highway Bridges in Maryland between 1631 and 1960. In addition, research was conducted at the National Register of Historic Places to determine if any other bridges built by the Nelson Merydith Company had been listed or determined eligible for listing.

DESCRIPTION OF THE CLOPPER ROAD BRIDGE

The Clopper Road Bridge, a single-span, one-lane, concrete arch bridge, is located in the vicinity of Leitersburg, Maryland. The bridge carries Clopper Road, which runs north-south, over Antietam Creek, which flows southwest. The bridge's general setting is a wooded valley containing a number of early twentieth-century farmsteads and also more recently constructed single-family homes.

Also known as Bridge Number W2521, the Clopper Road Bridge has been owned by Washington County since its construction in 1908. The bridge has a clear roadway width of 13 feet 2 inches and has no sidewalks. The superstructure of the bridge consists of a single, 70-foot span. The primary structural members are two steel-reinforced, cast-in-place, concrete arch girders with floor beams, which support a concrete deck with a bituminous wearing surface and metal-pipe railings. The north roadway approach to the bridge has metal guardrails, while the southern roadway approach has no guardrails. The bridge's substructure consists of two concrete abutments, with two flared concrete wingwalls per abutment.

The concrete endposts located at the Clopper Road Bridge's southern approach feature two identification plaques. The plaque on the southwest endpost indicates that the bridge was constructed by the Nelson Merydith Company of Chambersburg and Pittsburgh, Pennsylvania, in 1908. The plaque on the southeast endpost lists the Washington County Commissioners, Clerk, Surveyor, and Attorney who were likely instrumental in the bridge's construction.

Generally, it appears that the bridge has not been greatly altered since its construction. The only major alteration took place at an unknown date, when the bridge's original concrete parapets were replaced with metal railings. The four remaining concrete endposts at the two approaches to the bridge, one on each side, are not adjacent to the structure, but rather are located approximately 15 feet from the structure. In addition, numerous repairs have been made to the concrete arch girders and abutments over the years. Drawings from a 1980 repair and restoration of the Clopper Road Bridge by the Hagerstown, Maryland engineering firm of Oliver-Crump & Associates, Inc., indicate that new metal railings were installed and painted and that a great deal of concrete repair work was performed at this time.

SIGNIFICANCE OF THE CLOPPER ROAD BRIDGE

The Clopper Road Bridge over Antietam Creek is one of three extant concrete arch bridges that were constructed in Washington County in the first decade of the twentieth century by the Nelson Merydith Company, of Chambersburg and Pittsburgh, Pennsylvania. For an unknown period of time prior to 1900, the firm acted as agents for the Pittsburg (sic) Bridge Company, an important manufacturer of metal truss bridges located in Pittsburgh, Pennsylvania. The Pittsburg Bridge Company was established in 1878, incorporated in 1881, and in 1900 was absorbed by the American Bridge Company, a massive bridge building concern resulting from the consolidation of 28 independent bridge companies by U.S. Steel magnate and financier J.P. Morgan.[1] It appears that after this consolidation, the Nelson Merydith Company began to operate their own series of independent bridge companies, including the Nelson Bridge Company, the Nelson Construction Company, Nelson and Buchanan, and Gilbert & Nelson.

[1]Maryland State Highway Administration and Maryland State Department of Transportation, "Historic Highway Bridges in Maryland, 1631-1960: Historic Context Report," Prepared by P.A.C Spero & Company and Louis Berger & Associates, July 1995, Revised October 1995, pp. B-1, B-6, B-8.

It is fairly easy to attribute and date the Nelson Merydith Company's surviving concrete arch bridges in Maryland, as they contain plaques that identify the construction company and the date of completion. This company is known to have constructed four concrete arch bridges in Washington County between 1906 and 1909, of which three survive today. The earliest attributed bridge, the Barnes Road Bridge over Beaver Creek (WA-II-128) in the vicinity of Boonsboro, Maryland, was completed in 1906. Constructed of reinforced and poured concrete, the bridge is 11 feet wide and spans a distance of 50 feet. The bridge's single, broad, segmental arch springs from abutments with slightly flared ends, and the walls rise to a peak at the arch's center. The second bridge, which carries Maryland Route 56 over the Little Conococheague Creek (WA-V-063) southeast of Clear Spring, Maryland, was constructed in 1907, and also consists of a single broad arch. The third bridge, the Clopper Road Bridge, was completed in 1908. These bridges were recently surveyed as part of the Maryland Inventory of Historic Bridges. All three bridges were determined eligible for listing in the National Register by the Interagency Bridge Committee on February 26, 1996, due to their early construction date and use of concrete.

A fourth bridge, the Toms Road Bridge (WA-II-176) over Beaver Creek in the vicinity of Boonsboro, was completed in 1909, and no longer survives. It was demolished as part of a bridge replacement project in 1985. The 40-foot long, single-lane bridge consisted of a single, broad, segmental arch with concrete parapets extending several inches above the surface of the road, and a metal railing with square concrete endposts.

The Nelson Merydith Company also built steel bridges in Washington County during the first decade of the twentieth century, as well as at least two bridges in Pennsylvania: a concrete arch bridge in Metal Township, Franklin County dating to 1907, and a metal truss bridge in Cumberland Township, Adams County dating to 1894. These two bridges were listed in the National Register of Historic Places in 1988 as part of a multiple property documentation for highway bridges owned by the Commonwealth of Pennsylvania, Department of Transportation.[2]

[2]National Register of Historic Places Inventory-Nomination Form, "Highway Bridges Owned by the Commonwealth of Pennsylvania, Department of Transportation," Prepared by Paula A. C. Spero, August 25, 1986.

EVALUATION OF INDIVIDUAL NATIONAL REGISTER ELIGIBILITY

As part of Robinson & Associates' work on this project, the Clopper Road Bridge was evaluated under National Register Criteria A, B, and C at the local, state, and national levels of significance. Since no archaeological work was included in this phase of the project, these structures have not been evaluated for archaeological significance under Criterion D. The relevant criteria, as listed in *National Register Bulletin 16* (United States Department of the Interior, National Park Service, Interagency Resources Division), read as follows:

> The quality of **significance** in American history, architecture, archaeology, and culture is present in districts, sites, buildings, structures, and objects that possess integrity of location, design, setting, materials, workmanship, feeling, and association and:
>
> > **A. That are associated with events that have made a significant contribution to the broad patterns of our history; or**
> >
> > **B. that are associated with the lives of persons significant in our past; or**
> >
> > **C. that embody the distinctive characteristics of a type, period, or method of construction, or that represent the work of a master, or that possess high artistic values, or that represent a significant and distinguishable entity whose components may lack individual distinction.**

The National Register eligibility of the Clopper Road Bridge over Antietam Creek has been previously evaluated twice in the past several years. The bridge was determined eligible for listing in the National Register by the Interagency Bridge Committee on February 26, 1996.[3] It was also determined eligible for listing in the National Register when it was surveyed as part of the Maryland Inventory of Historic Bridges in 1997.[4]

Robinson & Associates concurs that the Clopper Road Bridge appears to be eligible for listing in the National Register of Historic Places under Criterion C, as a very early representative example of reinforced concrete construction. Completed in 1908, it is one of three surviving concrete arch bridges constructed in Washington County in the first decade of the twentieth century by the Nelson Merydith

---

[3]Information taken from conversation with Cynthia Simpson, Deputy Division Chief, Project Planning Division, State Highway Administration, Maryland Department of Transportation, November 10, 1997.

[4]Maryland Historical Trust and Maryland State Highway Administration, "Maryland Inventory of Historic Bridges, Historic Bridge Inventory Form, Clopper Road Bridge" (WA-I-344), Prepared by Wallace, Montgomery & Associates and P.A.C. Spero & Company, December 1997.

Company of Pennsylvania. Reinforced concrete bridges such as these are generally associated with the state's expanding transportation system at the close of the nineteenth and beginning of the twentieth centuries. This new reinforced concrete technology was introduced to the state of Maryland between 1890 and 1910, and the concrete arch bridges constructed during this period closely resemble earlier stone arch bridges built throughout Washington County. The stone arch form later constructed in concrete shows that while bridge builders were pleased with the success of arch bridges, they were not afraid to construct the same form in a new and improved material.

The Clopper Road Bridge is not located in a historic district. The closest officially designated historic resources are in the Old Forge Farm Historic District (WA-I-054), located approximately one mile away traveling south from the bridge on Clopper Road. The Old Forge Farm is a county designated historic district, and was also listed in the National Register of Historic Places in 1979.[5]

INTEGRITY

An examination of the seven aspects associated with integrity reveals that the Clopper Road Bridge retains a high degree of integrity despite its age and condition (See "Current Condition" below). The bridge has remained in its original **location** since its completion in 1908. The **design** of the bridge has not been significantly impacted over the years; the only known alterations to the structure are the replacement of the majority of the concrete parapets with metal railings, and unsuccessful repairs to the concrete. The **setting** of the bridge has changed somewhat since the first decade of the twentieth century, mainly with the recent construction of single-family homes on smaller lots near the bridge within the past 25 years. However, the valley in which the bridge is located remains rural in character, and the presence of several farmsteads attests to the area's continuous agricultural character. The **materials** used to construct the bridge have also not been greatly altered, although damage to the original concrete has repeatedly been repaired with modern concrete. The original **workmanship** of the bridge is still evident, regardless of the altered railings and the repaired concrete. Finally, the original **feeling** and **association** of the bridge remain; it still conveys its function as an aid to transportation in a fairly rural area.

CURRENT CONDITION

The Clopper Road Bridge is in a deteriorated condition, which is documented in the two most recent inspection reports. The 1995 inspection report noted concrete damage, including a 3/8-inch wide, 12-foot long crack in the inboard face of the downstream arch; extensive cracks containing rust staining,

[5]Information taken from conversation with Stephen T. Goodrich, AICP, Chief Senior Planner, Washington County, Maryland, Department of Planning and Community Development, March 30, 1998.

efflorescence, and water seepage on the outboard faces of both arch girders; deterioration in the west end of the downstream arch; cracks, unsound areas, and spalling in the concrete in the interface of the abutments and wingwalls with the arch; cracks and spalling in the bridge's concrete curb; and deterioration in the bridge's asphalt concrete overlay and both approaches. The existing pipe railing was determined to be substandard, as were the guardrail transitions and end treatments for the north approach. The 1995 bridge inspection report recommended that the bridge be replaced, due to the condition of both the bridge's substructure and superstructure.[6]

The 1997 inspection report stated that the deterioration had continued to progress since the 1995 inspection report. For example, the 12-foot long crack on the inboard face of the downstream arch had lengthened to 20 feet since 1995. It was noted that the bridge has a deficient load-carrying capacity, and is posted for only 10 tons. The bridge is posted as a single-lane crossing, due to its narrow roadway width. This report noted that it was likely that the cost to rehabilitate the bridge will exceed the economic benefit of such an action, and recommended that the bridge be replaced.[7]

In addition, three concrete cores were taken from the Clopper Road Bridge in 1993. This sampling revealed that the coarse aggregate was generally less than 1/2" in maximum dimension, which is a relatively small aggregate mix for such a large concrete structure. The use of this small aggregate indicates either a substandard mix when the bridge was constructed, or that a large percentage of the bridge's concrete is the result of previous repairs. This sampling also revealed a high chloride content in the concrete, which, when present within the concrete matrix, can cause corrosion in the reinforcing steel. This corrosion causes the reinforcing steel to expand, resulting in tensile stresses that exceed the cracking strength of concrete, in turn causing cracks and delaminations that lead to spalling. Removing these chlorides is not feasible. The combination of the condition of the concrete core, obvious visual signs of deterioration, undeterminable capacity, and questionable durability do not give the structural engineers a great deal of confidence in the short- or long-term structural integrity of the bridge.

BIBLIOGRAPHY

Maryland Historical Trust. "Inventory Form for State Historic Sites Survey, Barnes Road Bridge" (WA-II-128). Prepared by Paula Stoner Dickey, August 1975.

---

[6]Washington County, Maryland, Engineering Department, "Bridge Inspection Report, Bridge No. W2521, Clopper Road over Antietam Creek," Prepared by Modjeski and Masters, Inc., 1995, pp. 2-3.

[7]Washington County, Maryland, Department of Public Works, "Draft Bridge Inspection Report, Bridge No. W-2521, Clopper Road Bridge over Antietam Creek," Prepared by KCI Technologies, 1998, pp. 4-5.

Maryland Historical Trust. "Inventory Form for State Historic Sites Survey, Clopper Road Bridge" (WA-I-344). Prepared by Paula Stoner Dickey, May 1975.

Maryland Historical Trust. "Inventory Form for State Historic Sites Survey, Concrete Arched Bridge, Maryland Route 56 at Little Conococheague Creek" (WA-V-063). Prepared by Paula Stoner, July 1978.

Maryland Historical Trust. "Inventory Form for State Historic Sites Survey, Concrete Arched Bridge over Beaver Creek" (WA-II-1176). Prepared by Paula Stoner Dickey, March 1978.

Maryland Historical Trust and Maryland State Highway Administration. "Maryland Inventory of Historic Bridges, Historic Bridge Inventory Form, Barnes Road Bridge" (WA-II-128). Prepared by Wallace, Montgomery & Associates and P.A.C. Spero & Company, December 1997.

Maryland Historical Trust and Maryland State Highway Administration. "Maryland Inventory of Historic Bridges, Historic Bridge Inventory Form, Clopper Road Bridge" (WA-I-344). Prepared by Wallace, Montgomery & Associates and P.A.C. Spero & Company, December 1997.

Maryland Historical Trust and Maryland State Highway Administration. "Maryland Inventory of Historic Bridges, Historic Bridge Inventory Form, MD 56 over Little Conococheague Creek" (WA-V-63). Prepared by Wallace, Montgomery & Associates and P.A.C. Spero & Company, December 1997.

Maryland State Highway Administration and Maryland State Department of Transportation. "Historic Highway Bridges in Maryland, 1631-1960: Historic Context Report." Prepared by P.A.C. Spero & Company and Louis Berger & Associates, July 1995, Revised October 1995.

National Register of Historic Places Inventory-Nomination Form. "Highway Bridges Owned by the Commonwealth of Pennsylvania, Department of Transportation." Prepared by Paula A. C. Spero, August 25, 1986.

Telephone Interview with Stephen T. Goodrich, AICP, Chief Senior Planner, Washington County, Maryland, Department of Planning and Community Development, conducted by Laura L. Bobeczko of Robinson & Associates, Inc., March 30, 1998.

Telephone Interview with Cynthia Simpson, Deputy Division Chief, Project Planning Division, State Highway Administration, Maryland Department of Transportation, conducted by Laura L. Bobeczko of Robinson & Associates, Inc., November 10, 1998.

Washington County, Maryland, Engineering Department. "Bridge Inspection Report, Bridge No. W2521, Clopper Road over Antietam Creek." Prepared by Modjeski and Masters, Inc., 1995.

Washington County, Maryland, Department of Public Works. "Bridge Inspection Report, Bridge No. W-2521, Clopper Road Bridge over Antietam Creek." Prepared by KCI Technologies, 1997.

PREPARED BY: Laura L. Bobeczko, Judith H. Robinson, Architectural Historians
Robinson & Associates, Inc.
1909 Que Street, NW, Third Floor
Washington, DC 20009
(202) 234-2333

DATE: July 24, 1998

CONCURRENCE INFORMATION

This structure is:

___ eligible

___ not eligible

for listing in the Maryland Historic Sites Inventory and the National Register of Historic Places.

Approved by the Federal Preservation Officer

_____

Concurrence of State Preservation Officer

_____

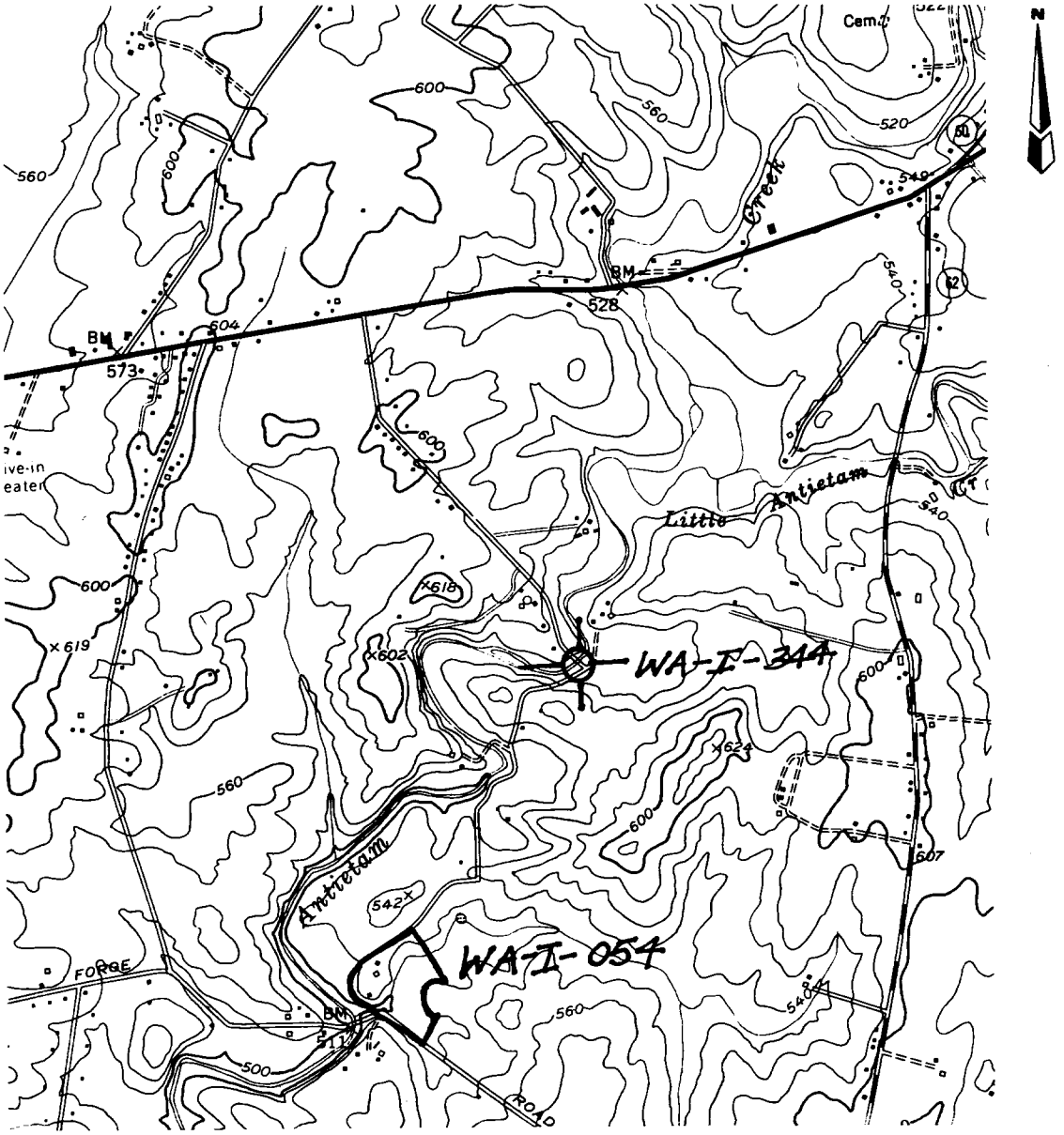

Clopper Road Bridge over Antietam Creek - WA-I-344
Old Forge Farm Historic District - WA-I-054 (1979 National Register Boundaries)
Vicinity of Leitersburg, Washington County, Maryland
USGS Map, Hagerstown, MD, PA Quadrangle
1953, Photorevised 1985
7.5 minute series

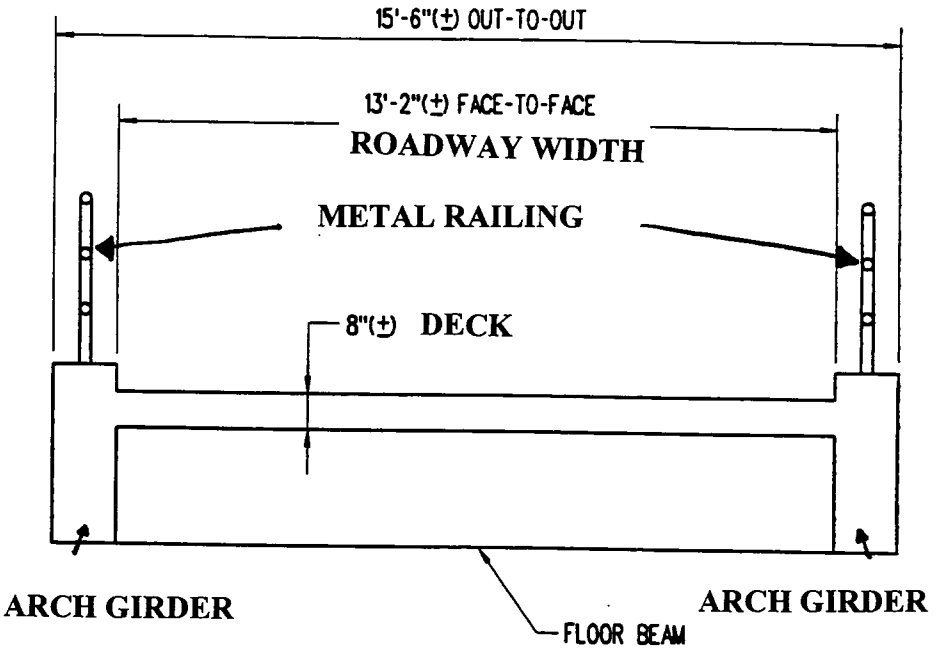

SECTION

Section Drawing of Clopper Road Bridge
from 1997 Bridge Inspection Report

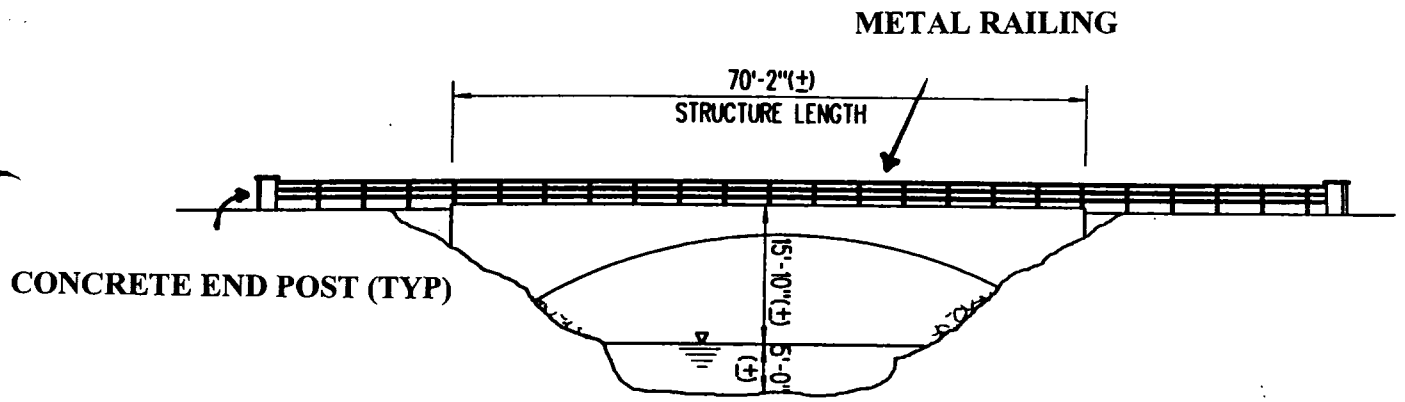

DOWNSTREAM ELEVATION

Downstream Elevation Drawing of Clopper Road Bridge
from 1997 Bridge Inspection Report

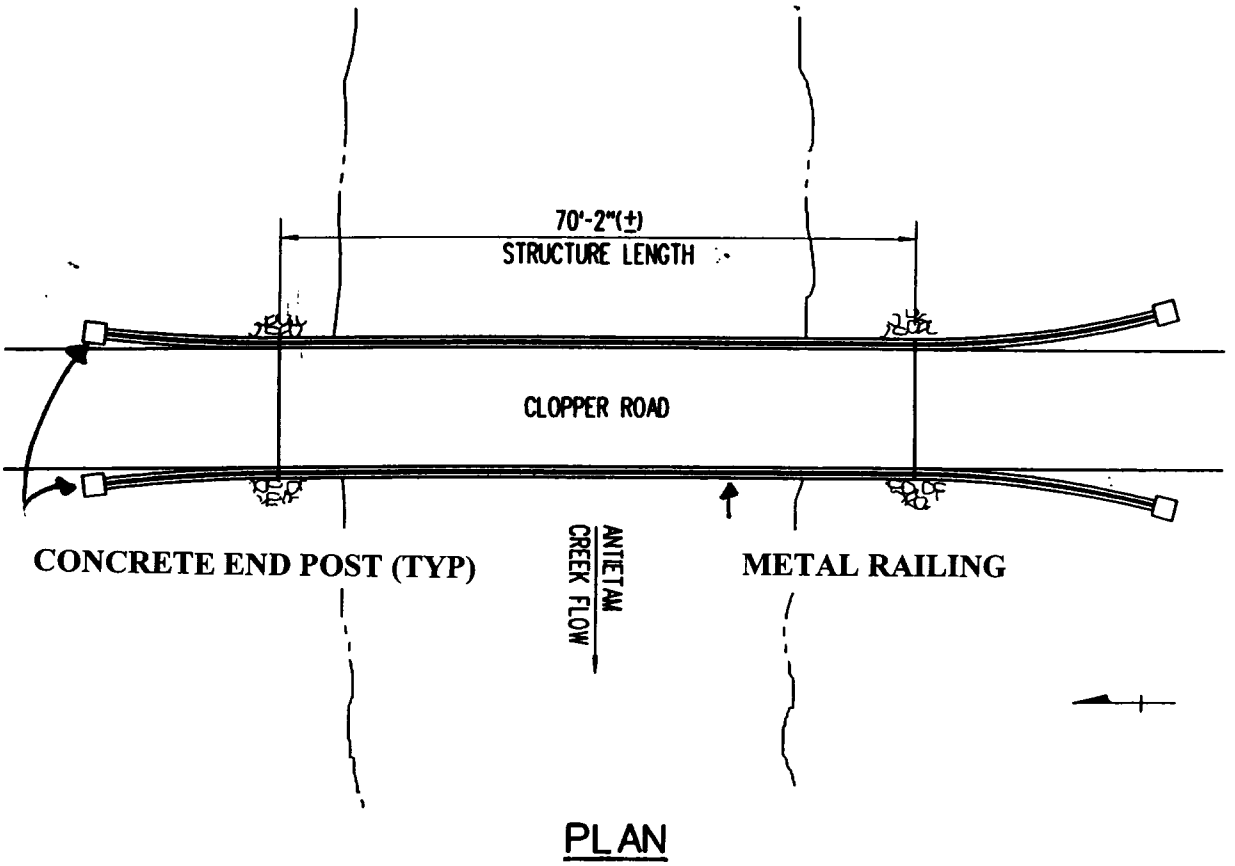

Plan Drawing of Clopper Road Bridge
from 1997 Bridge Inspection Report

Clopper Road Bridge over
Antietam Creek - WA-I-344
Vicinity of Leitersburg, Washington County, MD
Photo by Stephanie S. Foell, March 1988
Negative at MD SHPO
View of west elevation of bridge, facing northeast
Photo 1 of 11

Clopper Road Bridge over
Antietam Creek, WA 1-3M

Vicinity of Leitersburg, Washington County, Maryland
Photo by Stephanie S. Foell, March 1988
Negative at MD SHPO
View of east elevation of bridge facing northwest
Photo 4 of 11

BUILT BY
NELSON MERYDITH CO
CHAMBG PGH PA
1908

Clopper Road Bridge over
Antietam Creek MD 344
Vicinity of Leitersburg, Washington County, MD
Photo by Stephanie S. Foell, March 1998
Negative at MDSHPC
View of plaque on southwest concrete pier,
facing north
Photo 3 of 11

.S. ZELLER
.M. HUPLEY
IGTOR GUSHWA
COMMRS
E. WAGAMAN
CLERK
E. PIPER
CO. SURVEYOR
P. HAGNER
ATTY

Clopper Road Bridge over
Antietam Creek, WA-[illegible]-[illegible]44
Vicinity of Leitersburg, Washington
County, MD
Photo by Stephanie S Toeli,
March 1995
Negative at MDSHPO
View of [illegible] on southeast
concrete pier, facing [illegible]
Photo 4 of 11

Clopper Road Bridge over
Antietam Creek - WA-2-344
Vicinity of Leitersburg, Washington County, MD
Photo by Stephanie S. Foell, March 1998
Negative at MDSHPO
View of north approach facing south
Photo 5 of 11

Clopper Road Bridge over
Antietam Creek, MD 34
Vicinity of Leitersburg, Washington County, MD
Photo by Stephen S Fell, March 1998
Negative at MD SHPO
View of south approach, facing north
Photo 6 of 11

Clopper Road Bridge over
Antietam Creek, Vol. I, 344
Vicinity of Leitersburg, Washington County, MD
Photo by Stephanie S. Foell, March 1998
Negative at MD SHPO
View of west elevation of bridge,
facing southeast
Photo 7 of 11

Clopper Road Bridge over
Antietam Creek WA-I-314
Vicinity of Leitersburg, Washington County, MD
Photo by Stephanie S. Teell, March 1998
Negative at MD SHPO
Detail of concrete deterioration on
west elevation of bridge, facing southeast
Photo 8 of 11

Clopper Road Bridge Crew
Antietam Creek NA-I-344
Vicinity of Leitersburg, Washington County, MD
Photo by Stephanie S Foel March 1998
Negative at MDSHPO
Detail of curb deterioration on east elevation of bridge, facing east
Figure 9 of 11

Clopper Road Bridge over
Antietam Creek, MD 344
Vicinity of Leitersburg, Washington County, MD
Photo by Stephanie S. Foell, March 1998
Negative at MD SHPO
Detail of curb deterioration on west
elevation of bridge, facing west
Photo 10 of 11

Clopper Road Bridge over
Antietam Creek WA-I-#14
Vicinity of Leitersburg, Washington County, MD
Photo by Stephanie S. Foell, March 1998
Negative at MDSHPC
Detail of curb deterioration on left
elevation of bridge, facing west
Photo 11 of 11

Copy 1

2202603717
WA-I-344
District 18
Map 38

MARYLAND HISTORICAL TRUST WORKSHEET

NOMINATION FORM
for the
NATIONAL REGISTER OF HISTORIC PLACES, NATIONAL PARKS SERVICE

SEE INSTRUCTIONS

1. NAME

COMMON: Clopper Road Bridge

AND/OR HISTORIC:

2. LOCATION

STREET AND NUMBER: Clopper Road and Antietam Creek

CITY OR TOWN: Leitersburg vicinity

STATE: Maryland

COUNTY: Washington

3. CLASSIFICATION

CATEGORY (Check One)	OWNERSHIP		STATUS	ACCESSIBLE TO THE PUBLIC
☐ District ☐ Building ☐ Site ☒ Structure ☐ Object	☒ Public ☐ Private ☐ Both	Public Acquisition: ☐ In Process ☐ Being Considered	☐ Occupied ☐ Unoccupied ☐ Preservation work in progress	Yes: ☐ Restricted ☒ Unrestricted ☐ No

PRESENT USE (Check One or More as Appropriate)

☐ Agricultural	☐ Government	☐ Park	☒ Transportation	☐ Comments
☐ Commercial	☐ Industrial	☐ Private Residence	☐ Other (Specify)	
☐ Educational	☐ Military	☐ Religious		
☐ Entertainment	☐ Museum	☐ Scientific		

4. OWNER OF PROPERTY

OWNER'S NAME: Board of County Commissioners of Washington County

STREET AND NUMBER: Washington County Court House

CITY OR TOWN: Hagerstown

STATE: Maryland

5. LOCATION OF LEGAL DESCRIPTION

COURTHOUSE, REGISTRY OF DEEDS, ETC:

STREET AND NUMBER:

CITY OR TOWN:

STATE

Title Reference of Current Deed (Book & Pg. #):

6. REPRESENTATION IN EXISTING SURVEYS

TITLE OF SURVEY:

DATE OF SURVEY: ☐ Federal ☐ State ☐ County ☐ Local

DEPOSITORY FOR SURVEY RECORDS:

STREET AND NUMBER:

CITY OR TOWN:

STATE:

PS – 709

WA-I-344

7. DESCRIPTION

CONDITION	(Check One) ☐ Excellent ☒ Good ☐ Fair ☐ Deteriorated ☐ Ruins ☐ Unexposed	
	(Check One) ☐ Altered ☒ Unaltered	(Check One) ☐ Moved ☒ Original Site

DESCRIBE THE PRESENT AND ORIGINAL (*if known*) PHYSICAL APPEARANCE

This bridge carries Clopper Road across the Antietam Creek, about one mile south of Md. Route 60, the Leitersburg Pike, in Washington County.

The bridge is constructed of reinforced concrete with a single, broad segmental arch. A plaque set in the west end of its south wall records the builder as the Nelson Merydith Co. of Chambersburgh and the date as 1908. The bridge has a low profile, keeping the road nearly level as it crosses the Antietam. The concrete walls rise slightly above the road bed and are topped with iron railings. The bridge appears to be in good condition and is open to daily traffic on a small road which is not heavily traveled.

SEE INSTRUCTIONS

WA I-344

8. SIGNIFICANCE

PERIOD *(Check One or More as Appropriate)*

- ☐ Pre-Columbian
- ☐ 15th Century
- ☐ 16th Century
- ☐ 17th Century
- ☐ 18th Century
- ☐ 19th Century
- ☒ 20th Century

SPECIFIC DATE(S) *(If Applicable and Known)* 1908

AREAS OF SIGNIFICANCE *(Check One or More as Appropriate)*

Aboriginal
- ☐ Prehistoric
- ☐ Historic

- ☐ Agriculture
- ☒ Architecture
- ☐ Art
- ☐ Commerce
- ☐ Communications
- ☐ Conservation
- ☐ Education
- ☒ Engineering
- ☐ Industry
- ☐ Invention
- ☐ Landscape Architecture
- ☐ Literature
- ☐ Military
- ☐ Music
- ☐ Political
- ☐ Religion/Philosophy
- ☐ Science
- ☐ Sculpture
- ☐ Social/Humanitarian
- ☐ Theater
- ☒ Transportation
- ☐ Urban Planning
- ☐ Other *(Specify)*

STATEMENT OF SIGNIFICANCE

The Clopper Road bridge over the Antietam Creek is significant for its architecture, for the engineering skills it reflects and as an aid to transportation in Washington County since 1908.

This bridge is one of four concrete arched structures known to be in existence in Washington County. All were built during the first decade of the twentieth century and have served daily traffic since that time. The structures were built by the Nelson Bridge Company or the Nelson Merydith Company of Chambersburg, Pa.

SEE INSTRUCTIONS

WA-I-344

9. MAJOR BIBLIOGRAPHICAL REFERENCES

10. GEOGRAPHICAL DATA

LATITUDE AND LONGITUDE COORDINATES DEFINING A RECTANGLE LOCATING THE PROPERTY							OR	LATITUDE AND LONGITUDE COORDINATES DEFINING THE CENTER POINT OF A PROPERTY OF LESS THAN TEN ACRES					
CORNER	LATITUDE			LONGITUDE				LATITUDE			LONGITUDE		
	Degrees	Minutes	Seconds	Degrees	Minutes	Seconds		Degrees	Minutes	Seconds	Degrees	Minutes	Seconds
NW	°	'	"	°	'	"		°	'	"	°	'	"
NE	°	'	"	°	'	"							
SE	°	'	"	°	'	"							
SW	°	'	"	°	'	"							

APPROXIMATE ACREAGE OF NOMINATED PROPERTY:

Acreage Justification:

SEE INSTRUCTIONS

11. FORM PREPARED BY

NAME AND TITLE:
Paula Stoner Dickey, Consultant

ORGANIZATION
Washington County Historical Sites Survey

DATE
May, 1975

STREET AND NUMBER:
Court House Annex

CITY OR TOWN:
Hagerstown

STATE
Maryland

12. State Liaison Officer Review: (Office Use Only)

Significance of this property is:

National ☐ State ☐ Local ☐

Signature

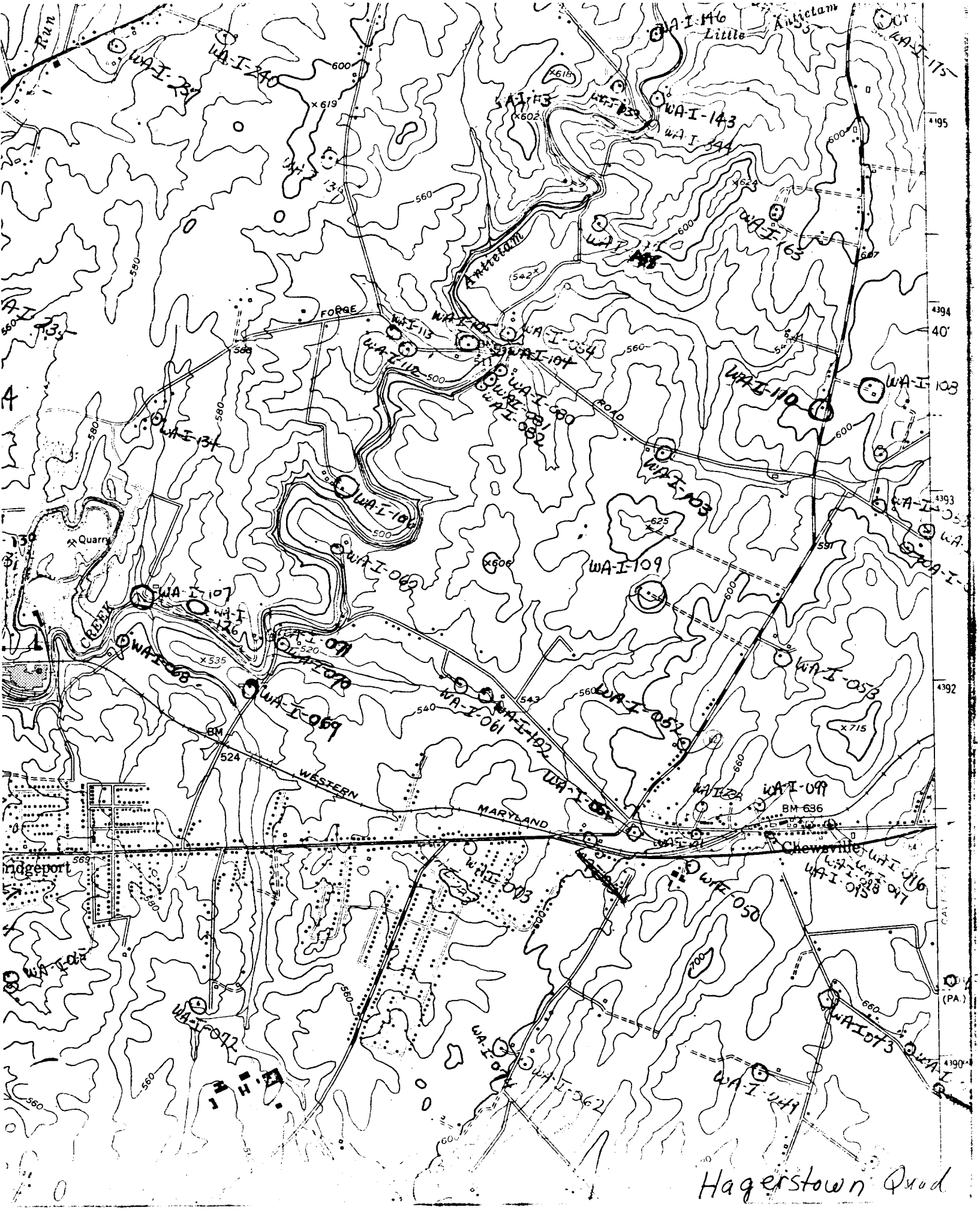
Run
WA-I-240
WA-I-146
Little
Antietam
WA-I-175
WA-I-143
WA-I-144
WA-I-163
Antietam
FORGE
WA-I-113
WA-I-112
WA-I-105
WA-I-104
WA-I-080
WA-I-081
WA-I-082
ROAD
WA-I-110
WA-I-108
WA-I-134
WA-I-103
WA-I-109
WA-I-106
WA-I-060
WA-I-107
WA-I-126
CREEK
Quarry
WA-I-068
WA-I-069
WA-I-070
WA-I-071
WA-I-061
WA-I-102
WA-I-052
WA-I-053
WA-I-099
BM 636
WESTERN
MARYLAND
Chewsville
Bridgeport
WA-I-050
WA-I-073
WA-I-049
WA-I-072
WA-I-074
WA-I-062
(PA.)
Hagerstown Quad

PAULA STONER DICKEY
CONSULTANT, WASHINGTON CO.
HISTORICAL SITES SURVEY

1908

PAULA STONER DICKEY
CONSULTANT, WASHINGTON CO.
HISTORICAL SITES SURVEY