AUGUST 1988

1989 ESTIMATE OF THE COST OF COMPLETING THE

NATIONAL SYSTEM OF INTERSTATE & DEFENSE HIGHWAYS

IN THE STATE OF MARYLAND

DATA AS OF DECEMBER 31, 1987

PREPARED BY THE MARYLAND DEPARTMENT OF TRANSPORTATION, STATE HIGHWAY ADMINISTRATION IN COOPERATION WITH THE FHWA DEPARTMENT OF TRANSPORTATION IN ACCORDANCE WITH SECTION 104(b)(5)(A), TITLE 23, USC, HIGHWAYS

AUGUST 1988

1989 ESTIMATE OF THE COST OF COMPLETING THE

NATIONAL SYSTEM OF INTERSTATE & DEFENSE HIGHWAYS

IN THE STATE OF MARYLAND

DATA AS OF DECEMBER 31, 1987

PREPARED BY THE MARYLAND DEPARTMENT OF TRANSPORTATION, STATE HIGHWAY ADMINISTRATION IN COOPERATION WITH THE FHWA DEPARTMENT OF TRANSPORTATION IN ACCORDANCE WITH SECTION 104(b)(5)(A), TITLE 23, USC, HIGHWAYS

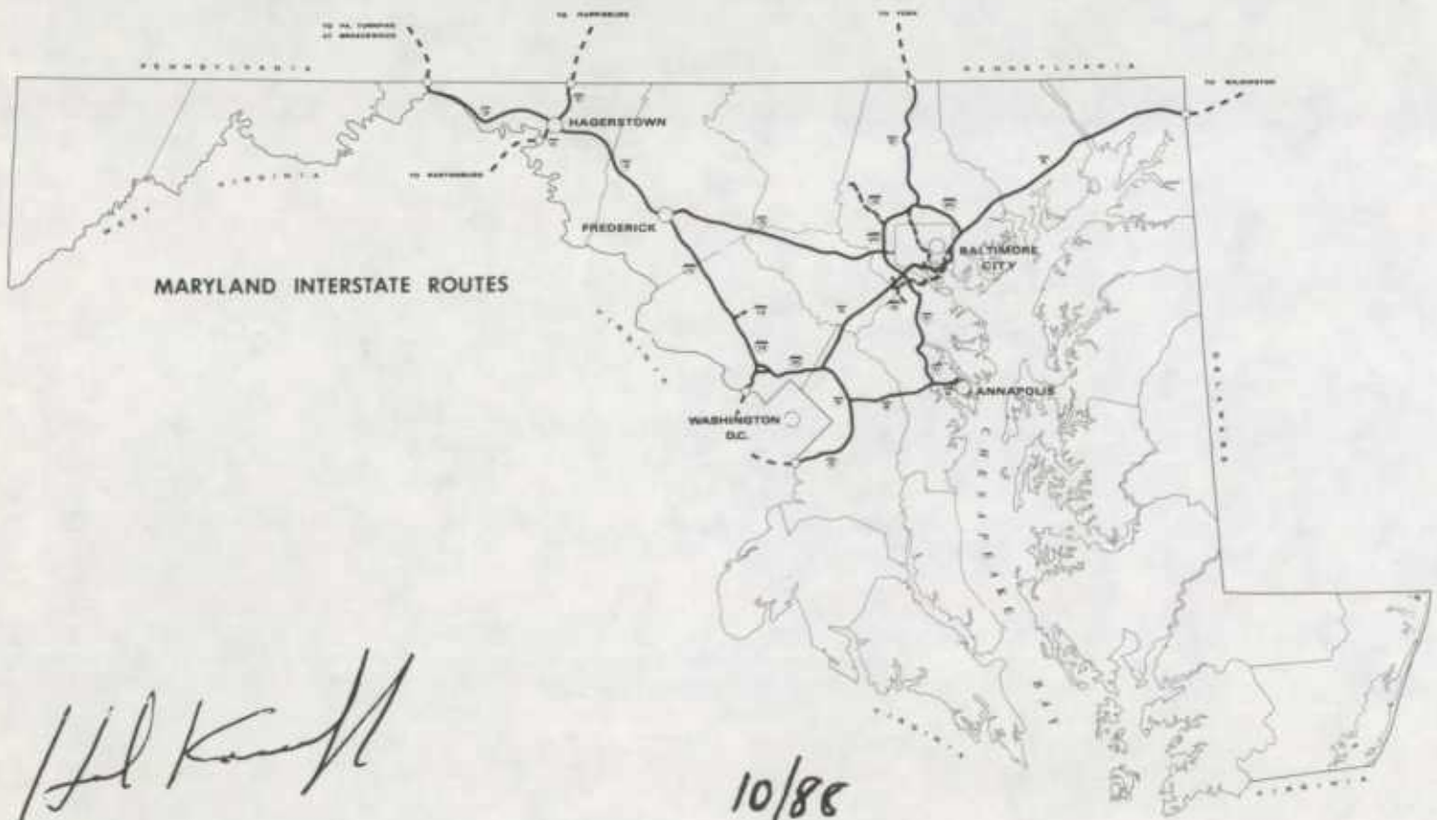

AUGUST 15, 1988
(DATA AS OF DECEMBER 31, 1987)

Hal Kassoff 10/88
Hal Kassoff Date
State Highway Administrator
STATE HIGHWAY ADMINISTRATION

George K. Frick, Jr. 10/88
George Frick Date
Acting Division Administrator
FEDERAL HIGHWAY ADMINISTRATION

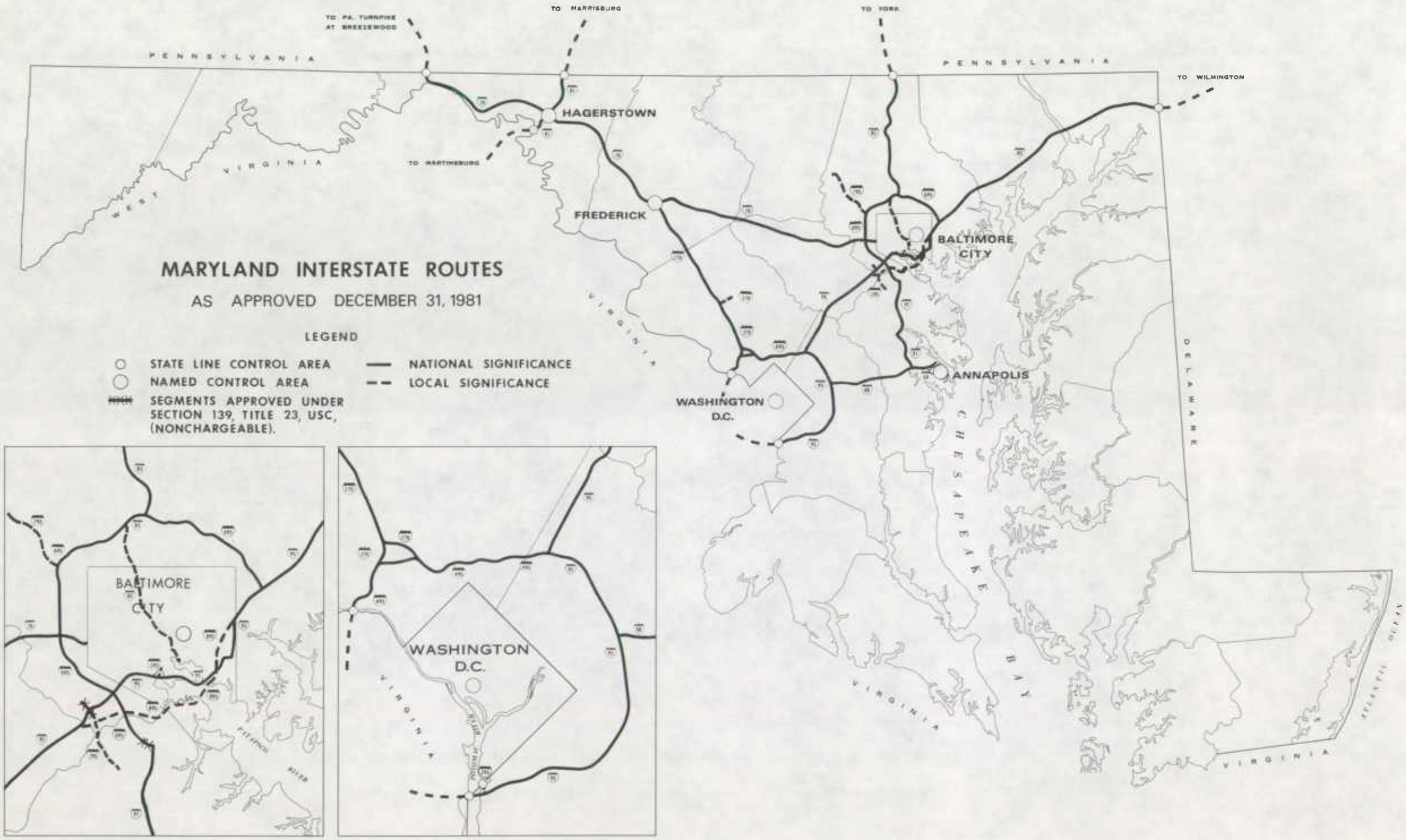
MARYLAND INTERSTATE ROUTES
AS APPROVED DECEMBER 31, 1981
LEGEND
STATE LINE CONTROL AREA
NAMED CONTROL AREA
SEGMENTS APPROVED UNDER SECTION 139, TITLE 23, USC, (NONCHARGEABLE).
NATIONAL SIGNIFICANCE
LOCAL SIGNIFICANCE
TO PA. TURNPIKE AT BREEZEWOOD
TO HARRISBURG
TO YORK
TO WILMINGTON
TO HARTINSBURG
PENNSYLVANIA
PENNSYLVANIA
WEST VIRGINIA
VIRGINIA
HAGERSTOWN
FREDERICK
BALTIMORE CITY
ANNAPOLIS
WASHINGTON D.C.
CHESAPEAKE BAY
DELAWARE
VIRGINIA
VIRGINIA
ATLANTIC OCEAN
BALTIMORE CITY
PATAPSCO RIVER
WASHINGTON D.C.
VIRGINIA

TABLE A

APPROVED INTERSTATE ROUTE DESCRIPTIONS

STATE OF MARYLAND

ROUTE NUMBER	ROUTE DESCRIPTION	LENGTH MILES	
		ROUTE SIGNIFICANCE N	ROUTE SIGNIFICANCE L
68 (2)	FROM A JUNCTION WITH I - 95 EAST OF WASHINGTON EASTERLY VIA BOWIE TO A JUNCTION WITH MD 70 NORTH OF ANNAPOLIS	20.09	
70	FROM THE MARYLAND - PENNSYLVANIA STATE LINE NEAR HANCOCK SOUTHEASTERLY VIA HAGERSTOWN AND FREDERICK TO THE PARK AND RIDE LOT IN WEST BALTIMORE CITY, NEAR SECURITY BOULEVARD	93.23	
81	FROM THE MARYLAND - WEST VIRGINIA STATE LINE NEAR WILLIAMSPORT NORTHERLY VIA HAGERSTOWN TO THE MARYLAND - PENNSYLVANIA STATE LINE NEAR STATE LINE, PENNSYLVANIA	11.99	
83	FROM A JUNCTION WITH FAYETTE STREET IN BALTIMORE TO THE MARYLAND - PENNSYLVANIA STATE LINE NEAR MARYLAND LINE, MARYLAND	24.04 (1)	10.01
95	FROM THE MARYLAND - DISTRICT OF COLUMBIA STATE LINE ON THE WOODROW WILSON BRIDGE NEAR ALEXANDRIA, VIRGINIA, EASTERLY THEN NORTHERLY VIA COLLEGE PARK AND BALTIMORE TO THE MARYLAND - DELAWARE STATE LINE NEAR ELKTON, MARYLAND	108.88	
97 (2)	FROM A JUNCTION WITH I - 68 JUST WEST OF ANNAPOLIS NORTHERLY TO A JUNCTION WITH I - 695 SOUTH OF BALTIMORE CITY	17.57	
195 (2)	FROM A CONNECTION WITH I - 95 IN BALTIMORE COUNTY NEAR THE HOWARD COUNTY LINE SOUTHERLY TO THE BALTIMORE - WASHINGTON INTERNATIONAL AIRPORT		4.93
270 (2)	FROM A JUNCTION WITH I - 70 NEAR FREDERICK SOUTHEASTERLY TO A SPLIT WYE (Y) CONNECTION WITH I - 495 SOUTHEAST OF ROCKVILLE	34.52	
295	FROM A JUNCTION WITH I - 95 EAST OF THE WOODROW WILSON BRIDGE NORTHERLY TO THE MARYLAND - DISTRICT OF COLUMBIA LINE		0.78
370	FROM A JUNCTION WITH I - 270 NORTH OF ROCKVILLE EASTERLY TO THE SHADY GROVE METRO STATION SOUTHEAST OF GAITHERSBURG		2.67
395 (2)	FROM A JUNCTION WITH I - 95 EAST OF MD 295, NORTHERLY TO THE VICINITY OF HAMBURG STREET IN BALTIMORE CITY		0.72
495	FROM THE MARYLAND - VIRGINIA STATE LINE NEAR CABIN JOHN NORTHERLY TO THE JUNCTION WITH I - 270, THEN EASTERLY TO A JUNCTION WITH I - 95 NORTH OF COLLEGE PARK	15.26	
695	BALTIMORE BELTWAY - FROM THE JUNCTION WITH I - 97 SOUTH OF BALTIMORE CITY CLOCKWISE AROUND THE CITY TO A POINT ON I - 83 NEAR BROOKLANDVILLE AND FROM I - 83 NEAR TOWSON TO A JUNCTION WITH I - 95 NORTHEAST OF BALTIMORE CITY	30.78	
795 (2)	FROM A JUNCTION WITH I - 695 NORTHWEST OF BALTIMORE CITY NORTHWESTERLY TO OWINGS MILLS BOULEVARD		9.52
895	FROM A JUNCTION WITH I - 695 SOUTH OF BALTIMORE CITY NORTHEASTERLY VIA THE HARBOR TUNNEL TO A JUNCTION WITH I - 95 EAST OF BALTIMORE CITY		15.00
TOTAL		356.36	43.63

(1) FROM I - 695 TO MARYLAND - PENNSYVANIA STATE LINE

(2) ROUTES INCLUDED IN 1989 I.C.E.: OTHERS ARE CONSIDERED ZERO FAI COST

TYPICAL CROSS-SECTION OF IMPROVEMENT

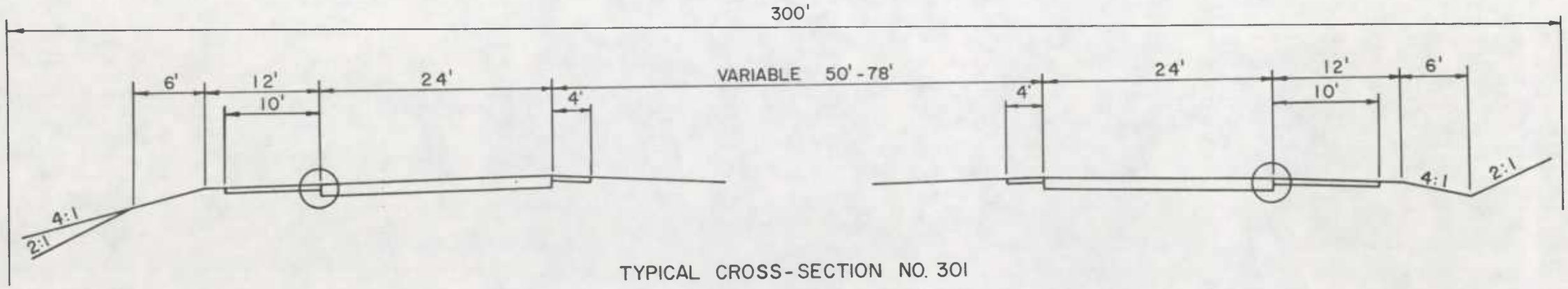

TYPICAL CROSS-SECTION NO. 301
TO BE USED ON ROUTE I-70; I-270; I-81; I-895

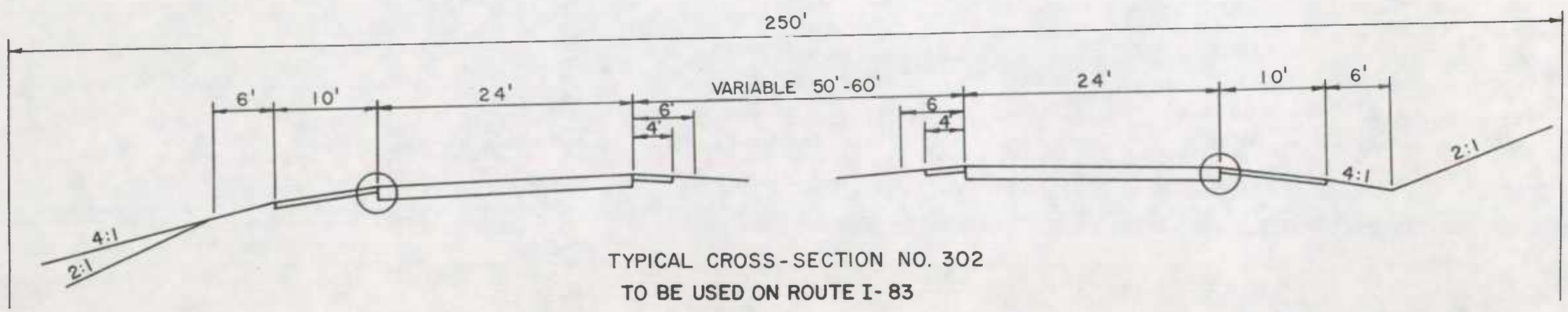

TYPICAL CROSS-SECTION NO. 302
TO BE USED ON ROUTE I-83

NOT TO SCALE

TYPICAL CROSS-SECTION OF IMPROVEMENT

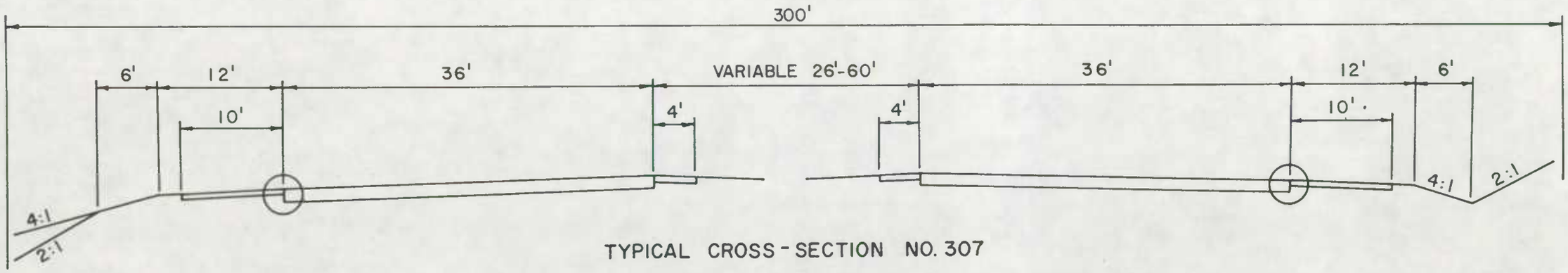

TYPICAL CROSS-SECTION NO. 307

TO BE USED ON ROUTE: I-70 ; I-95 ; I-495; I-695, I-270

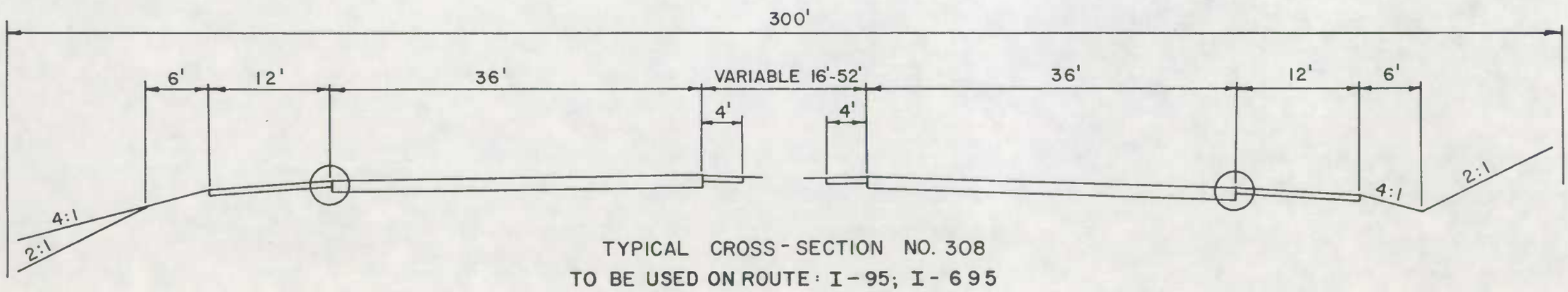

TYPICAL CROSS-SECTION NO. 308

TO BE USED ON ROUTE: I-95; I-695

NOT TO SCALE

TYPICAL CROSS-SECTION OF IMPROVEMENT

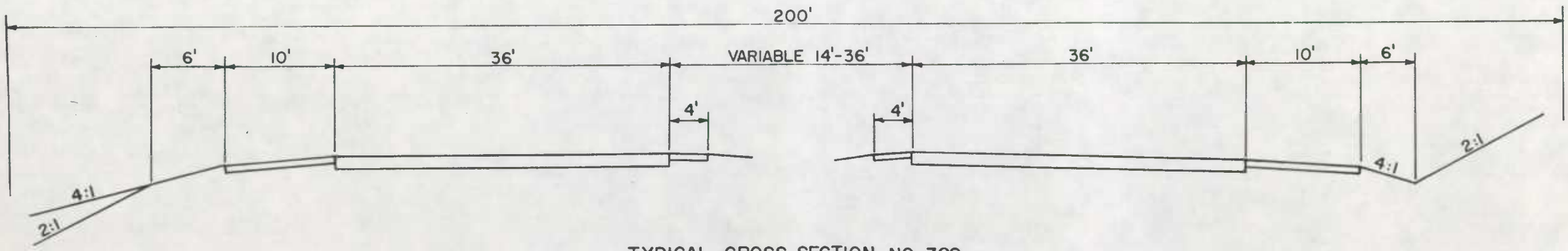

TYPICAL CROSS-SECTION NO. 309
TO BE USED ON ROUTE: I-83; I-495

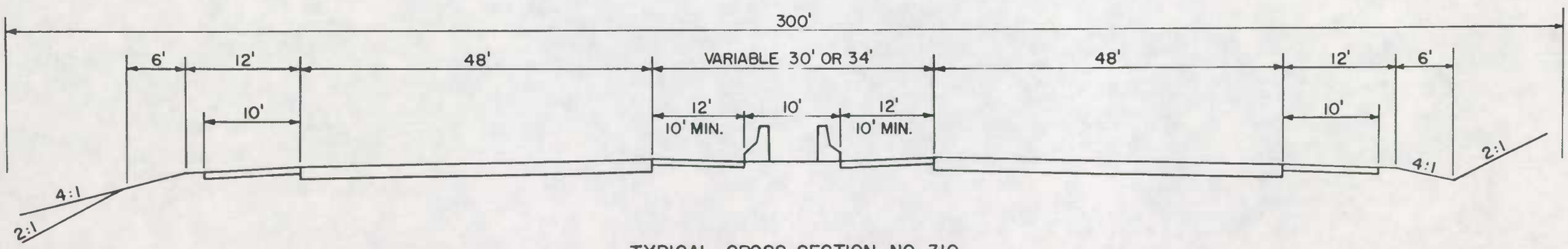

TYPICAL CROSS-SECTION NO. 310
TO BE USED ON ROUTE: I-70 ; I-695

NOTE-
ON I-695 THE MEDIAN WIDTH VARIES FROM 12' TO 26'
AND BEAM TYPE MEDIAN BARRIER IS PROVIDED.

NOT TO SCALE

TYPICAL CROSS-SECTION OF IMPROVEMENT

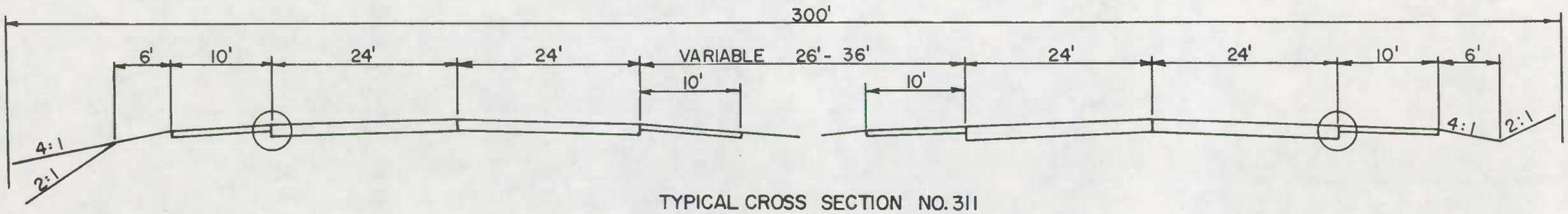

TYPICAL CROSS SECTION NO. 311
TO BE USED ON ROUTE: I-83

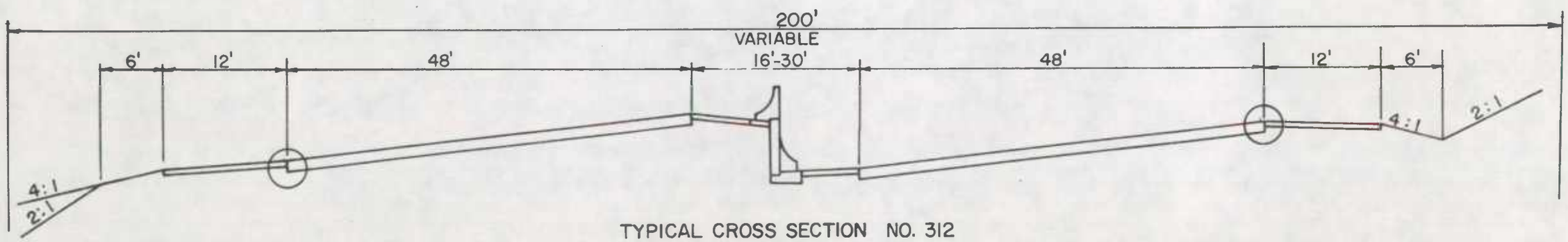

TYPICAL CROSS SECTION NO. 312
TO BE USED ON ROUTE: I-495

NOT TO SCALE

TYPICAL CROSS-SECTION OF IMPROVEMENT

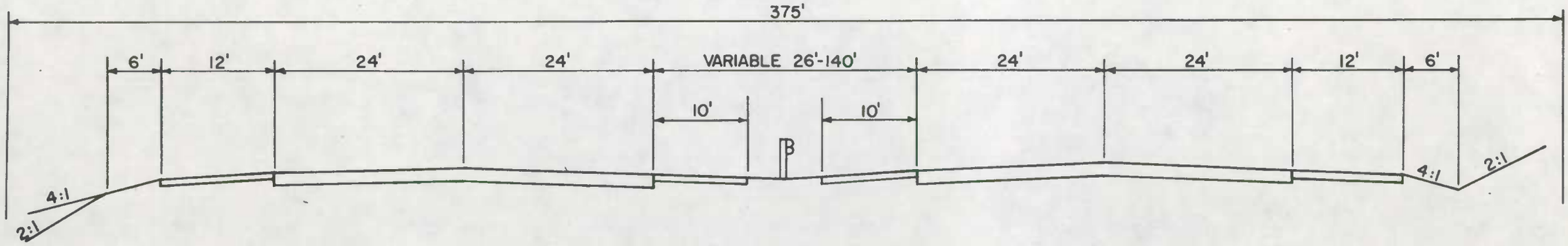

TYPICAL CROSS-SECTION NO. 313
TO BE USED ON ROUTE I-95

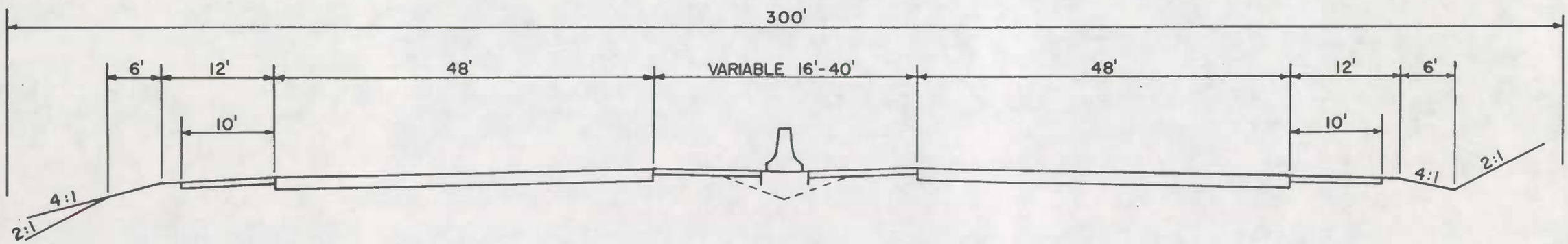

TYPICAL CROSS-SECTION NO. 314
TO BE USED ON ROUTE: I-95; I-495; I-695

NOTE: I-695 HAS CONSTANT MEDIAN OF 30'.

NOT TO SCALE

TYPICAL CROSS-SECTION OF IMPROVEMENT

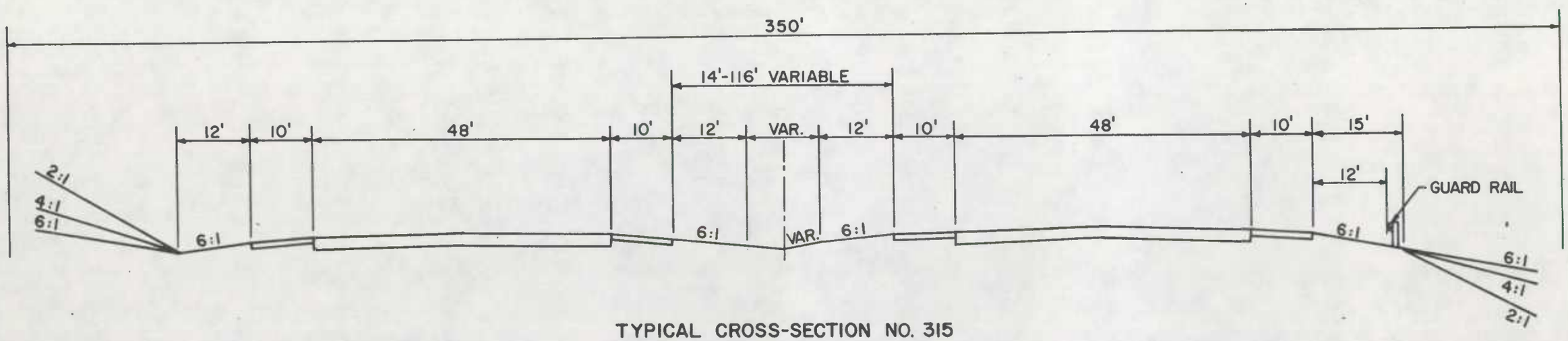

TYPICAL CROSS-SECTION NO. 315
TO BE USED ON ROUTE: I-95

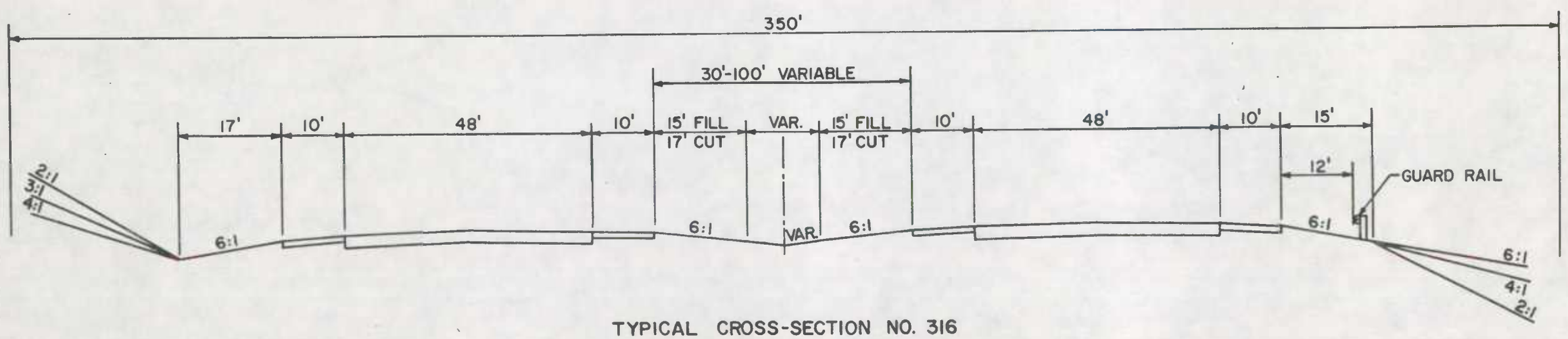

TYPICAL CROSS-SECTION NO. 316
TO BE USED ON ROUTE: I-95

NOT TO SCALE

TYPICAL CROSS-SECTION OF IMPROVEMENT

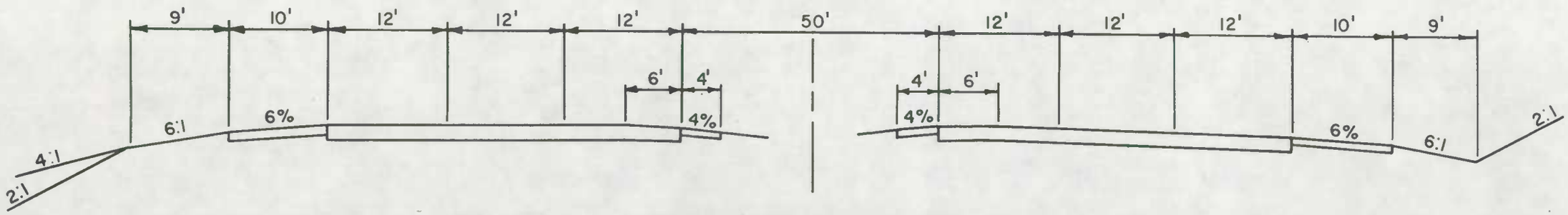

TYPICAL CROSS-SECTION NO. 323

TO BE USED ON I-83

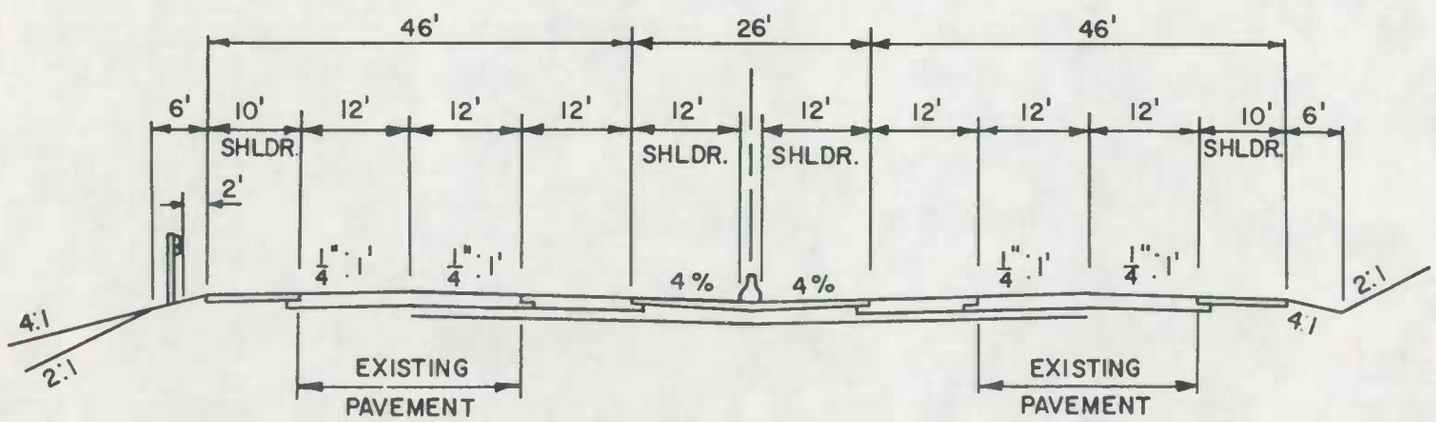

TYPICAL CROSS-SECTION NO. 324

TO BE USED ON ROUTE I-270

NOT TO SCALE

TYPICAL CROSS-SECTION OF IMPROVEMENTS

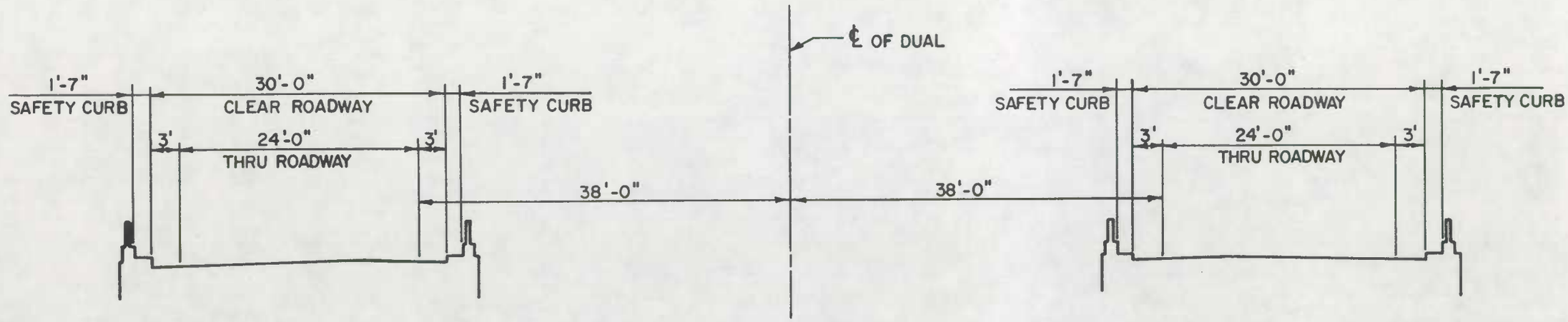

SECTION NO. 329 CROSS SECTION FOR 1181' BRIDGE ON ROUTE : 81 OVER POTOMAC RIVER

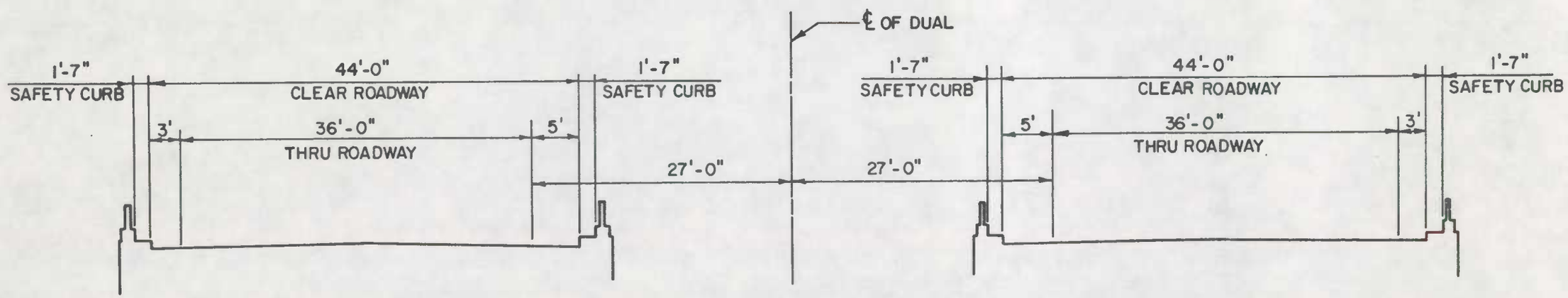

SECTION NO. 330 CROSS SECTION FOR 1443' BRIDGE ON ROUTE : 495 OVER POTOMAC RIVER AT CABIN JOHN

TYPICAL CROSS-SECTION OF IMPROVEMENTS

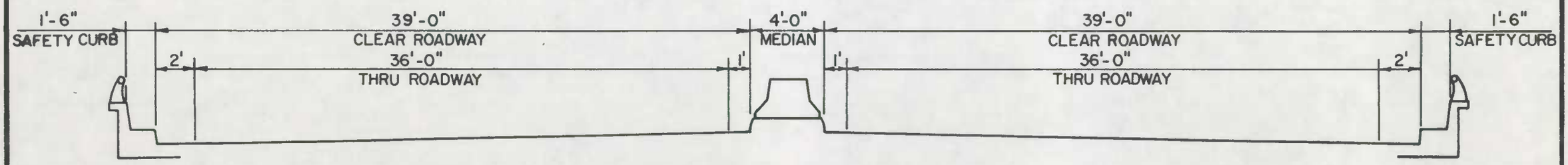

SECTION NO. 331 CROSS-SECTION FOR 5061' BRIDGE ON ROUTE :95 OVER SUSQUEHANNA RIVER

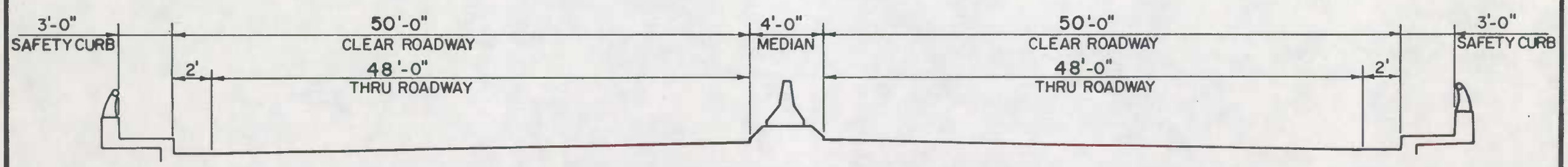

SECTION NO. 332 CROSS-SECTION FOR 5905' BRIDGE ON ROUTE: .95 OVER POTOMAC RIVER AT JONES POINT

TYPICAL CROSS-SECTION OF IMPROVEMENT

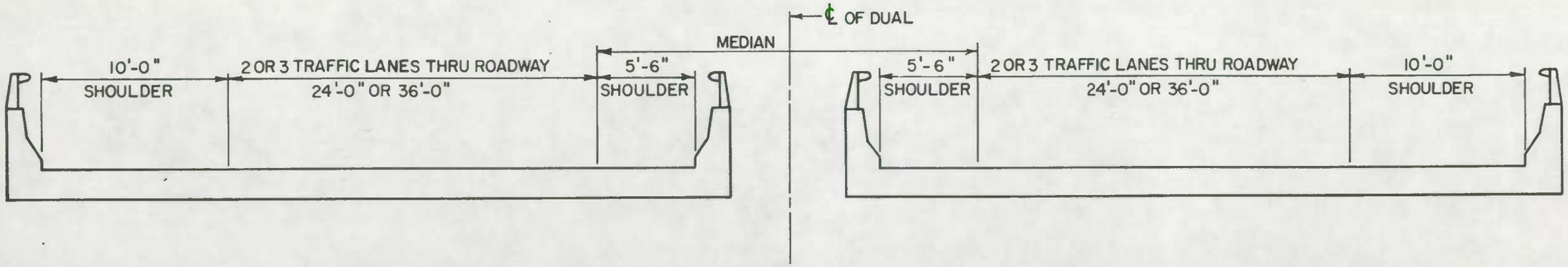

SECTION NO. 334: TYPICAL CROSS-SECTION FOR DUAL INTERSTATE ROUTE BRIDGES - 4 OR 6 LANES TOTAL (NEW OR AFTER WIDENING)

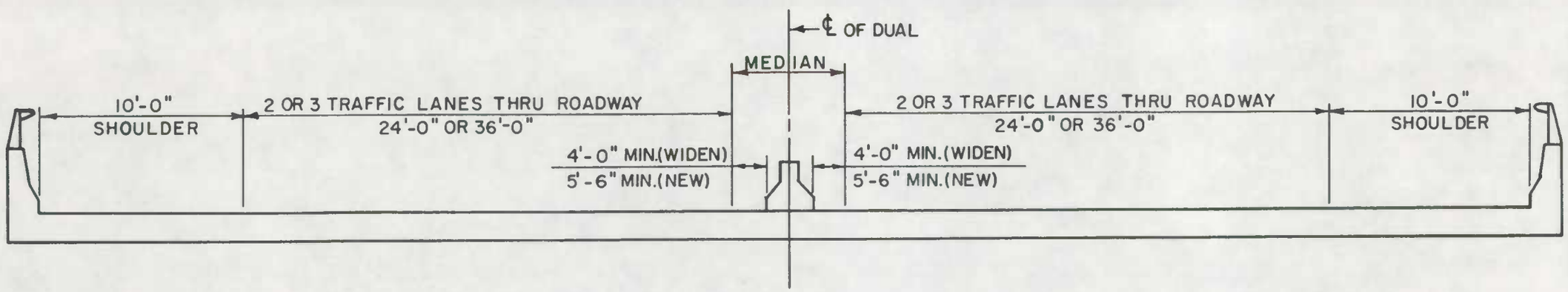

SECTION NO. 335: TYPICAL CROSS - SECTION FOR SINGLE INTERSTATE ROUTE BRIDGES - 4 OR 6 LANES TOTAL (NEW OR AFTER WIDENING)

NOTES: 1. FOR EACH TURNING MOVEMENT ON BRIDGES, ADD 12' LANE AND REPLACE SHOULDER WITH 10' CLEARANCE.
2. VERTICAL CLEARANCE: 16'-9" MINIMUM CLEARANCE OVER STATE & INTERSTATE ROUTES.
15'-0" MINIMUM CLEARANCE OVER COUNTY & SECONDARY ROUTES.

TYPICAL CROSS-SECTION OF IMPROVEMENT

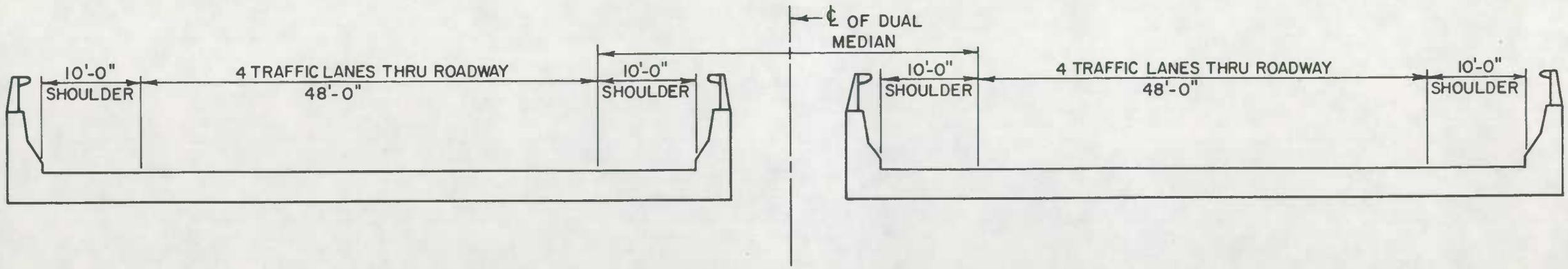

SECTION NO. 336: TYPICAL CROSS - SECTION FOR DUAL INTERSTATE BRIDGES EIGHT OR MORE LANES TOTAL

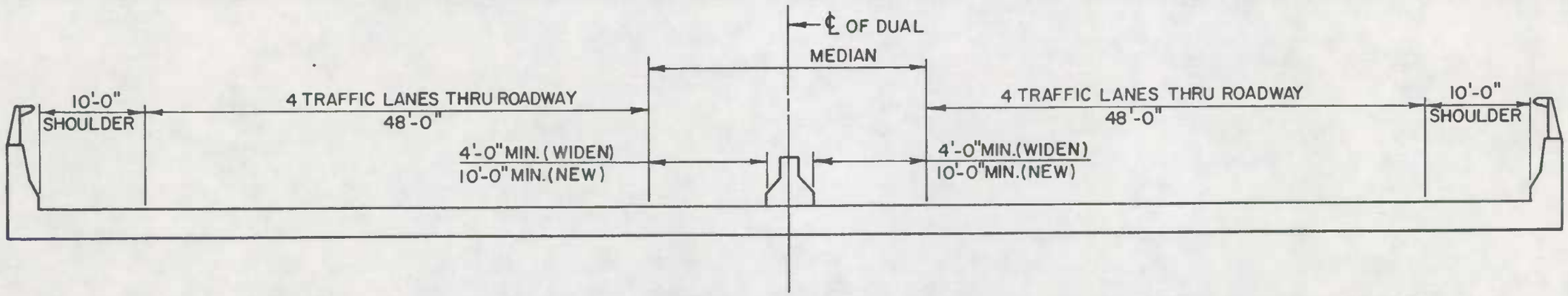

SECTION NO. 337: TYPICAL CROSS - SECTION FOR SINGLE INTERSTATE ROUTE BRIDGE EIGHT OR MORE LANES TOTAL

NOTES: 1. FOR EACH TURNING MOVEMENT ON BRIDGES ADD 12' LANE AND REPLACE SHOULDER WITH 10' CLEARANCE.

2. VERTICAL CLEARANCE: 16'-9" MINIMUM CLEARANCE OVER STATE & INTERSTATE ROUTES.

15'-0" MINIMUM CLEARANCE OVER COUNTY & SECONDARY ROUTES.

TYPICAL CROSS-SECTION OF IMPROVEMENT

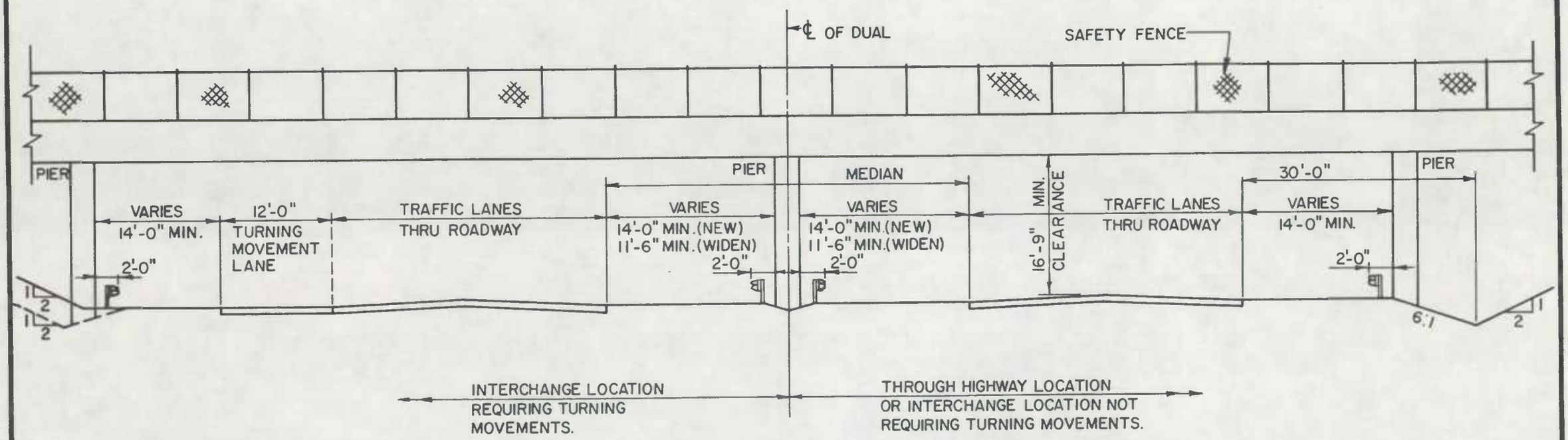

SECTION NO. 338: TYPICAL ELEVATION FOR BRIDGE OVER INTERSTATE ROUTE

NOTE: USE GUARD RAIL WHERE APPLICABLE
GUARD RAIL POST SPACING TO BE 3'-1½" WHEN
HORIZONTAL CLEARANCE IS LESS THAN 4'-0".

TYPICAL CROSS-SECTION OF IMPROVEMENT

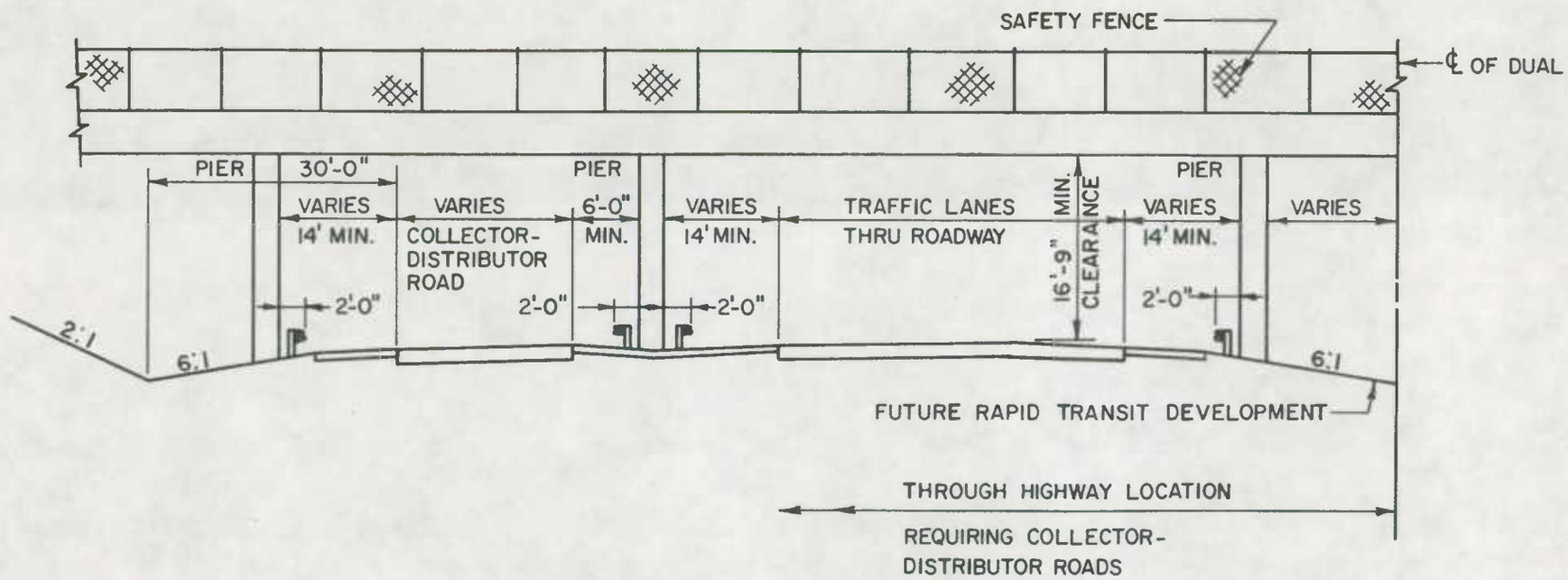

SECTION NO. 339 : TYPICAL ELEVATION FOR BRIDGE OVER INTERSTATE

NOTE: USE GUARD RAIL WHERE APPLICABLE.
GUARD RAIL POST SPACING TO BE 3'-1½" WHEN HORIZONTAL CLEARANCE IS LESS THAN 4'-0".

STATE OF MARYLAND
CITY OF BALTIMORE

TYPICAL CROSS-SECTION OF IMPROVEMENT

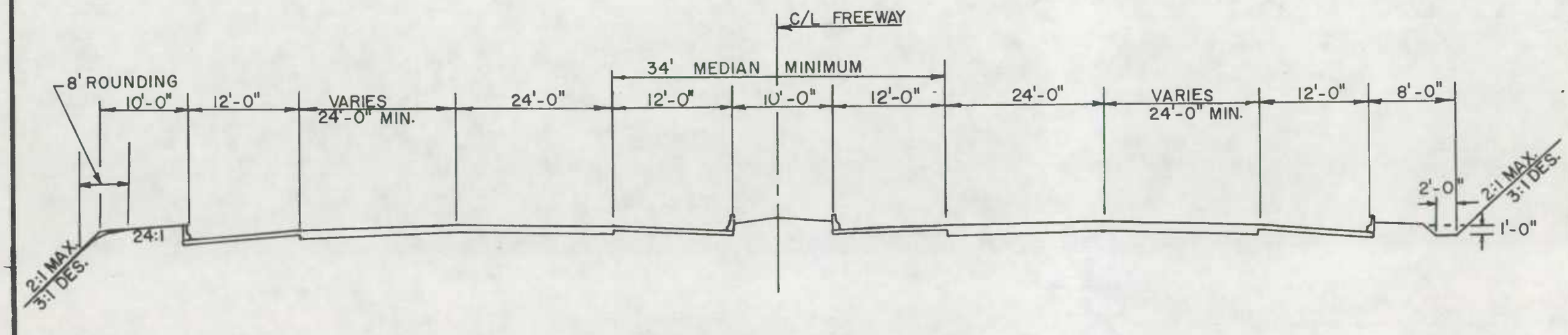

TYPICAL CROSS-SECTION NO. 342
TO BE USED ON ROUTE I-95

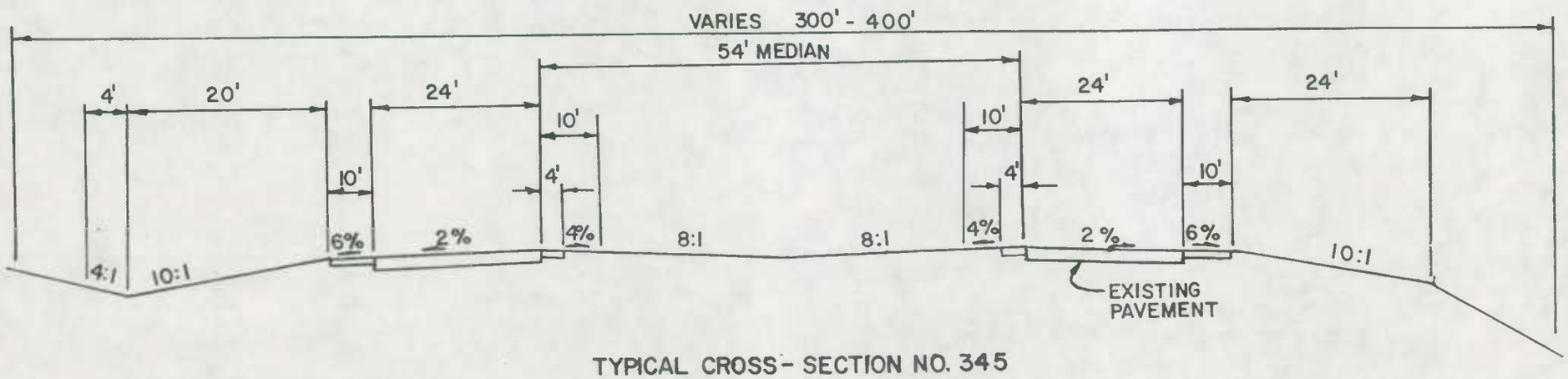

TYPICAL CROSS-SECTION NO. 345
TO BE USED ON ROUTE I-97

NOT TO SCALE

STATE OF MARYLAND
CITY OF BALTIMORE

TYPICAL CROSS-SECTION OF IMPROVEMENT

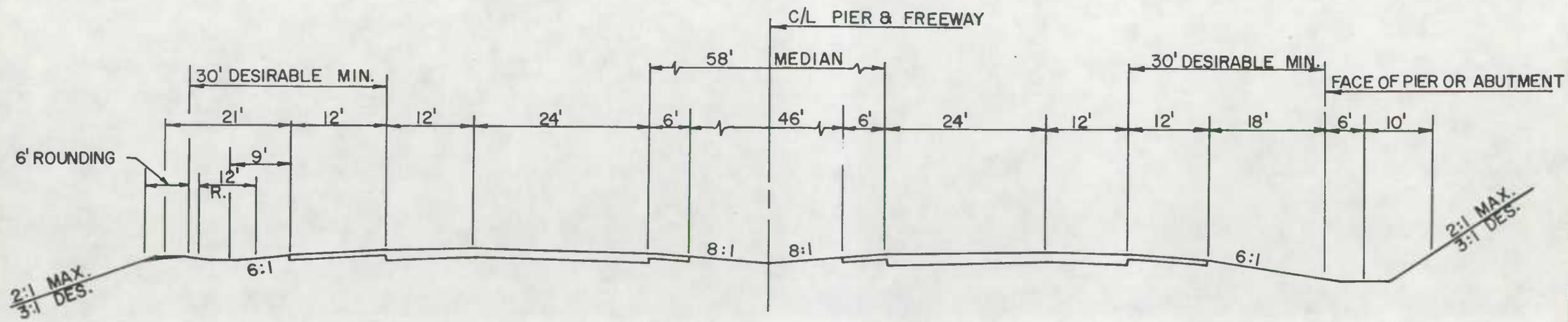

TYPICAL CROSS-SECTION NO.343
TO BE USED ON ROUTE I-95

NOT TO SCALE

STATE OF MARYLAND
CITY OF BALTIMORE

TYPICAL CROSS-SECTION OF IMPROVEMENT

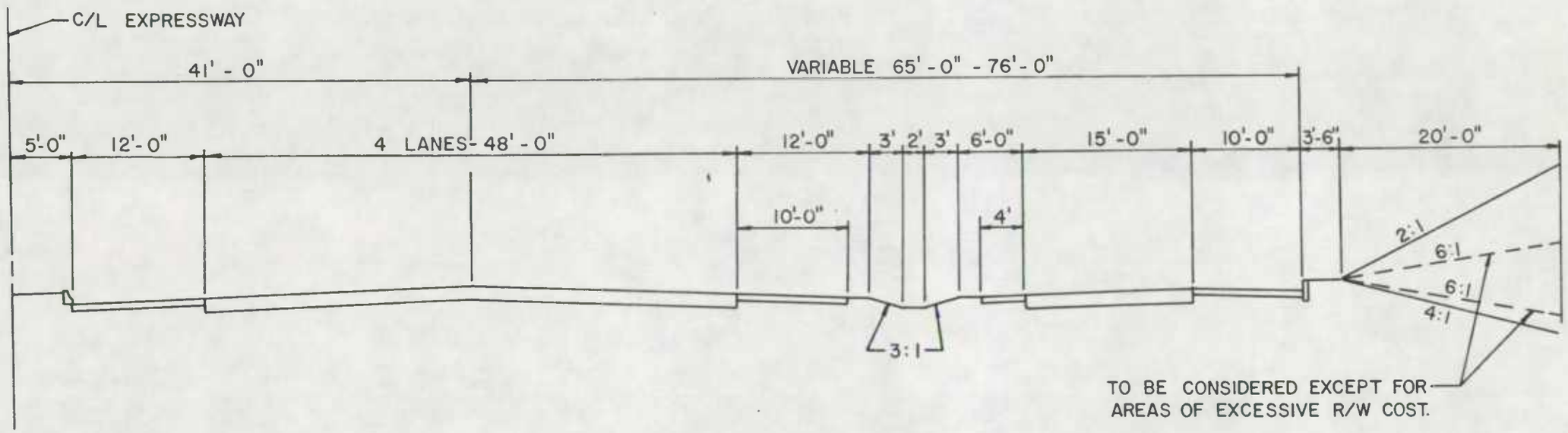

TYPICAL CROSS-SECTION NO. 344
TO BE USED ON ROUTE I-95

NOT TO SCALE

TYPICAL CROSS-SECTION OF IMPROVEMENT

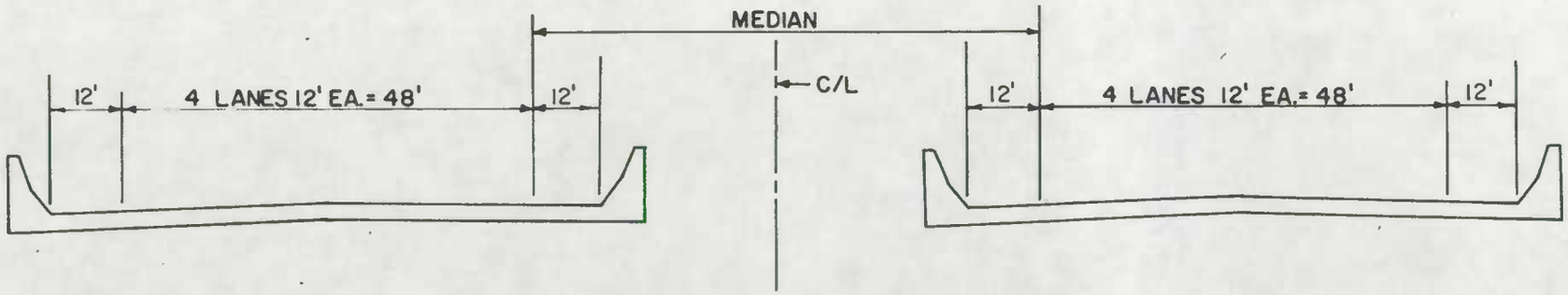

CROSS-SECTION NO. 349 FOR DUAL BRIDGES
TO BE USED ON ROUTE I- 95

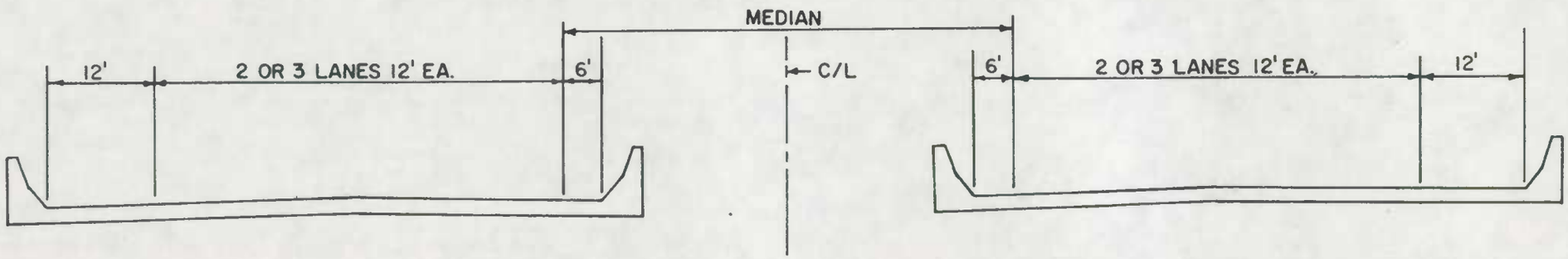

CROSS-SECTION NO. 350 FOR DUAL BRIDGES
TO BE USED ON ROUTE I-395

NOT TO SCALE

STATE OF MARYLAND
CITY OF BALTIMORE

TYPICAL CROSS-SECTION OF IMPROVEMENT

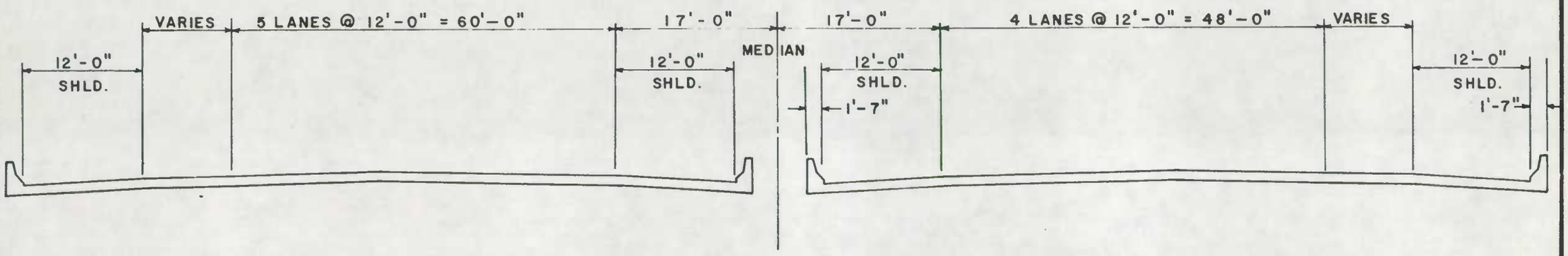

CROSS-SECTION FOR DUAL BRIDGES
TYPICAL CROSS-SECTION NO. 351
TO BE USED ON ROUTE I-95

NOT TO SCALE

TYPICAL CROSS - SECTION OF IMPROVEMENT

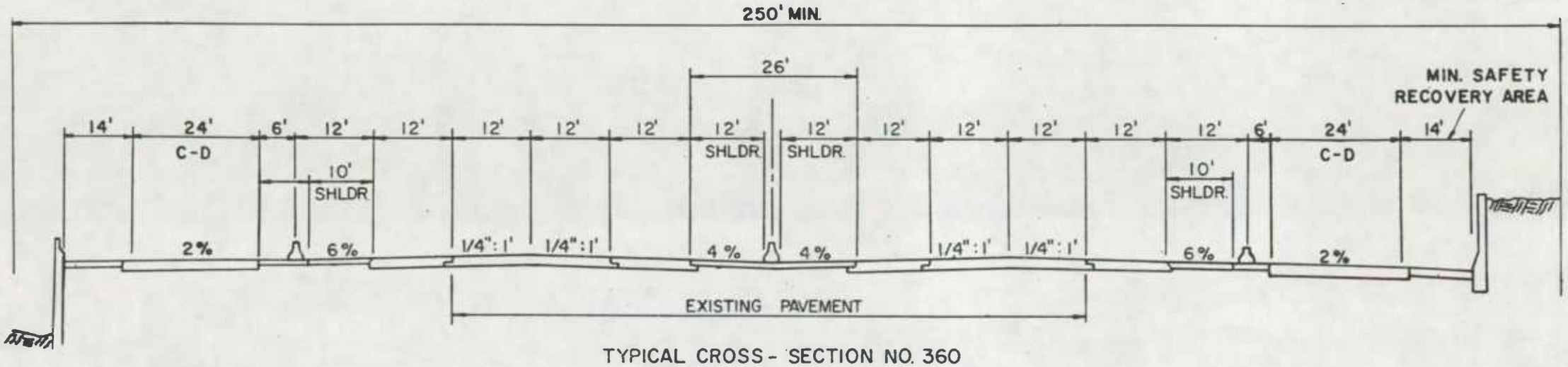

TYPICAL CROSS - SECTION NO. 360
TO BE USED ON ROUTE I-270

NOT TO SCALE

TYPICAL CROSS-SECTION OF IMPROVEMENT

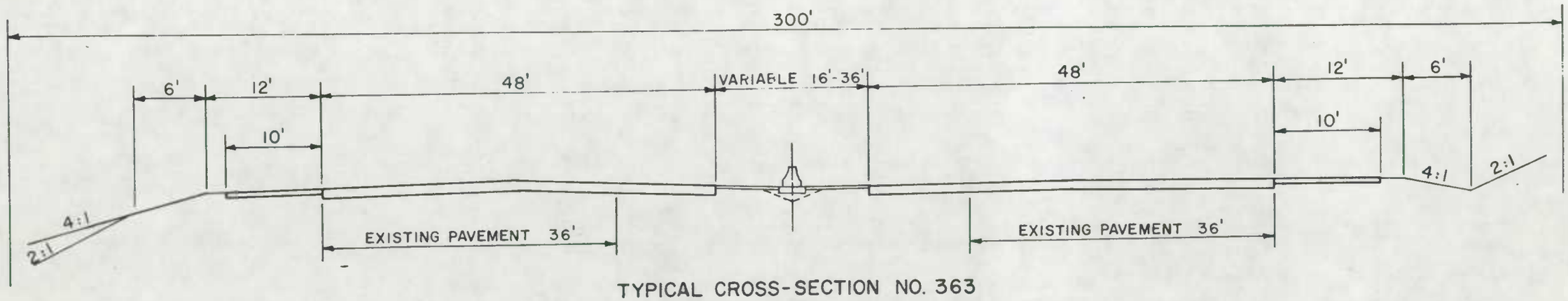

TYPICAL CROSS-SECTION NO. 363
TO BE USED ON ROUTE I-495

NOT TO SCALE

STATE OF MARYLAND
CITY OF BALTIMORE

TYPICAL CROSS-SECTION OF IMPROVEMENT

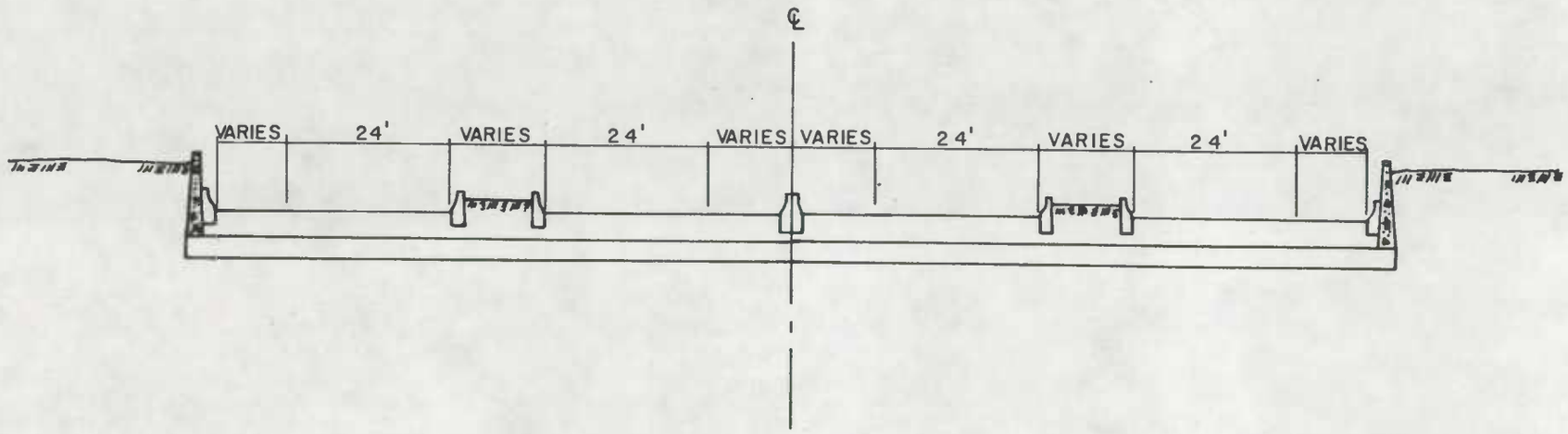

TYPICAL CROSS-SECTION NO. 364
TO BE USED ON ROUTE I-95

SCALE : 1"=30'

TYPICAL CROSS-SECTION OF IMPROVEMENT

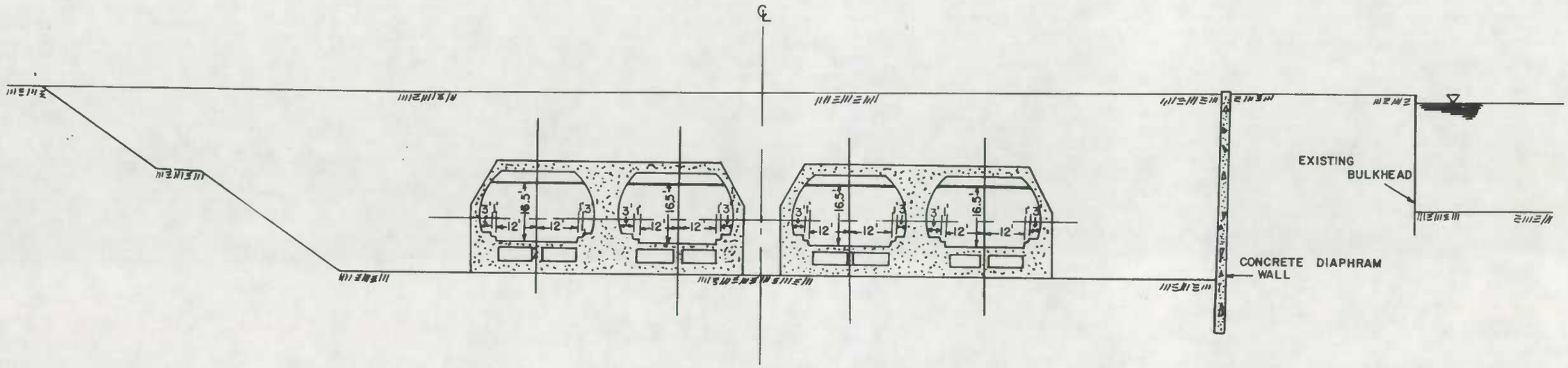

TYPICAL CROSS-SECTION NO. 366
TO BE USED ON ROUTE I-95

SCALE : 1"=30'

STATE OF MARYLAND
CITY OF BALTIMORE

TYPICAL CROSS-SECTION OF IMPROVEMENT

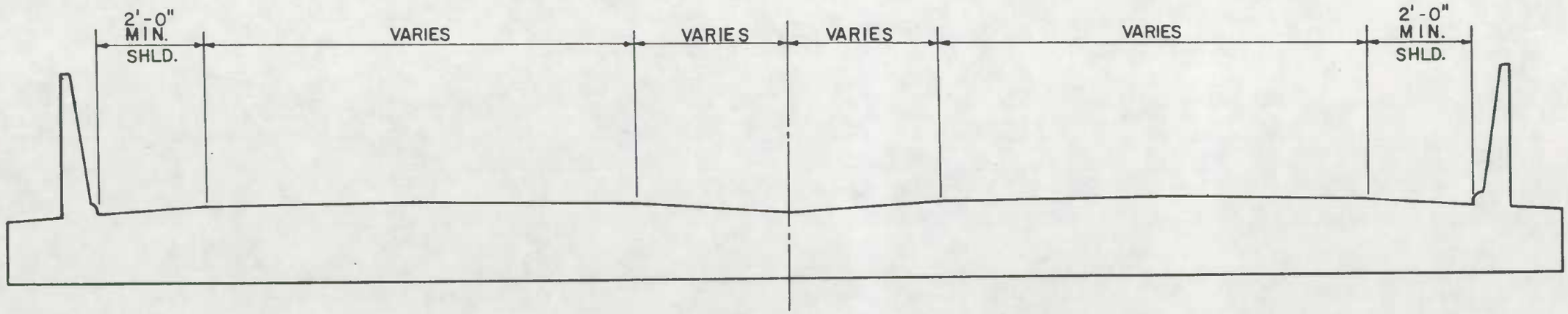

MAINLINE SECTION IN CUT

TO BE USED ON I-95

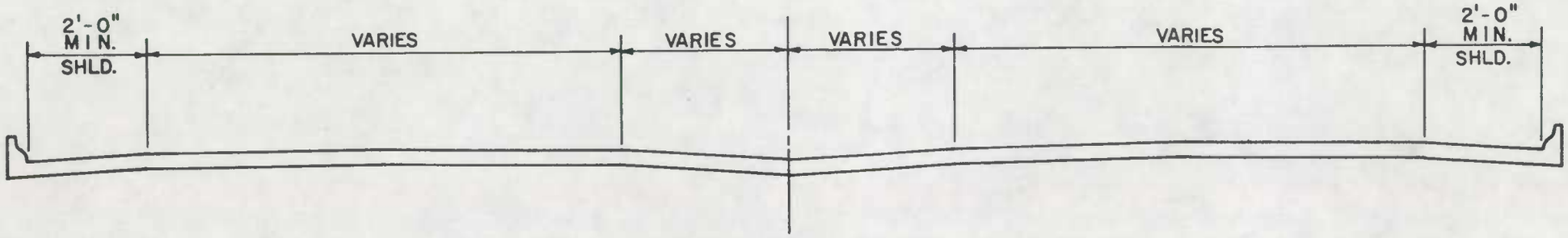

MAINLINE SECTION IN FILL

TO BE USED ON I-95

TYPICAL CROSS-SECTION NO. 367

NOT TO SCALE

TYPICAL CROSS-SECTION OF IMPROVEMENT

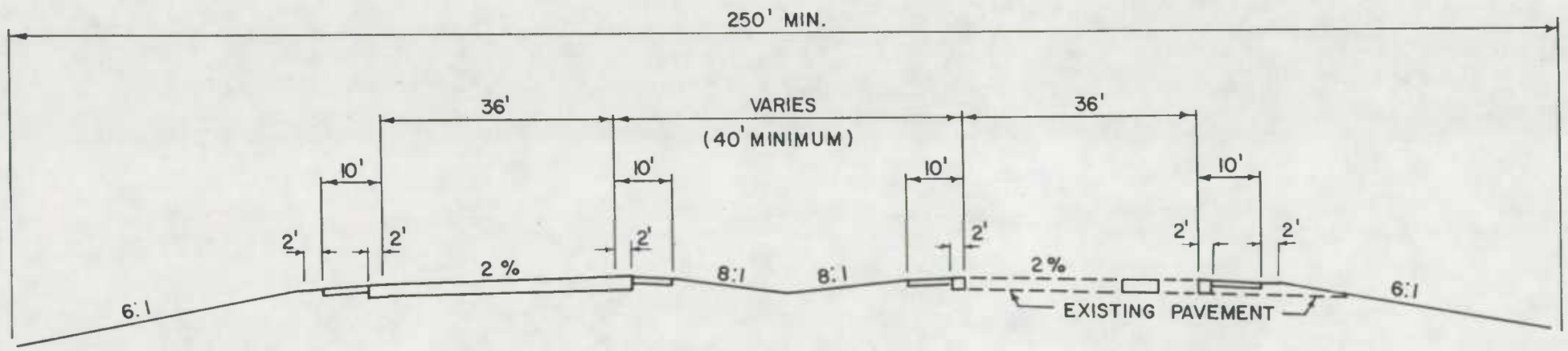

TYPICAL CROSS - SECTION NO. 375

TO BE USED ON ROUTE I-195

NOT TO SCALE

TYPICAL CROSS-SECTION OF IMPROVEMENT

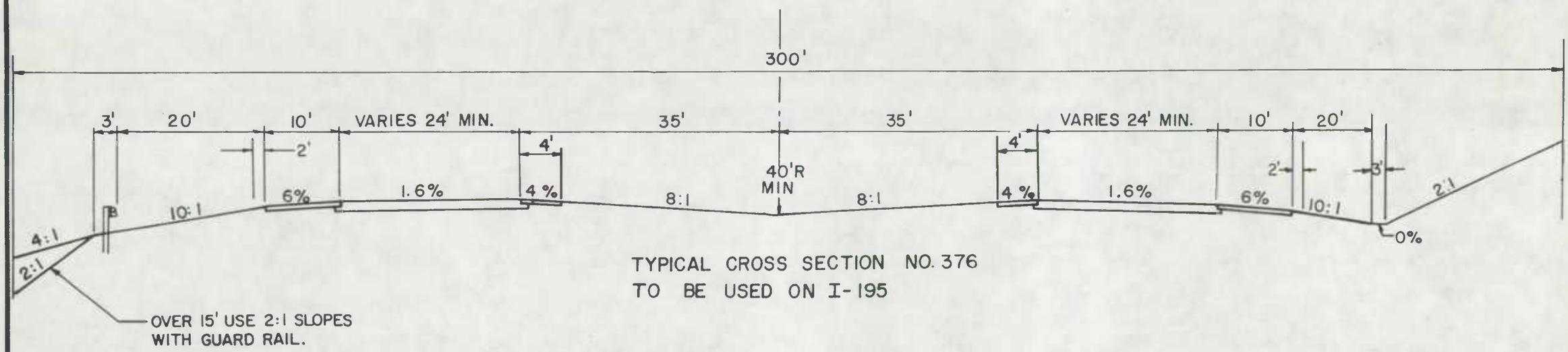

TYPICAL CROSS SECTION NO. 376
TO BE USED ON I-195

NOT TO SCALE

TYPICAL CROSS-SECTION OF IMPROVEMENT

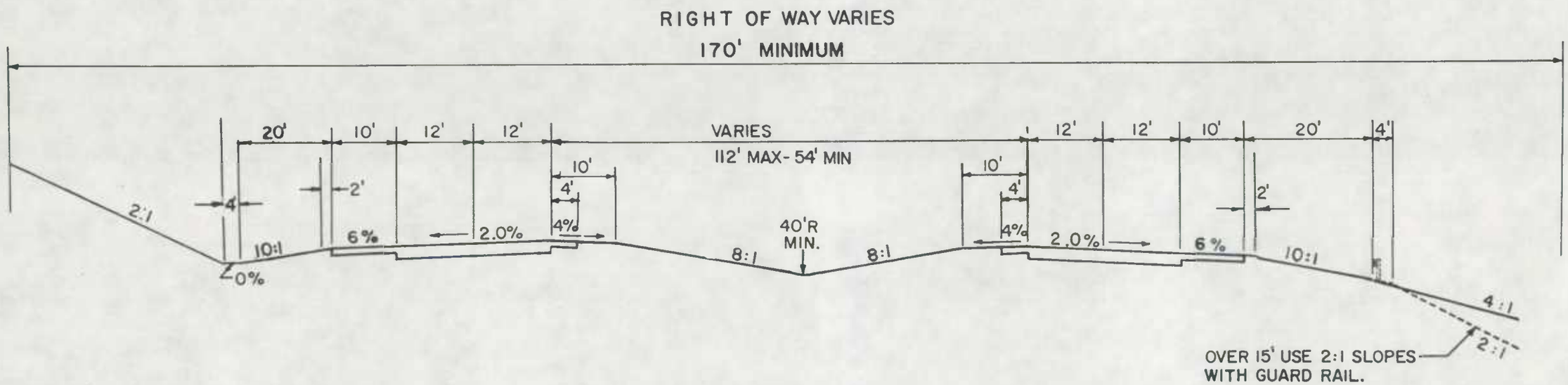

TYPICAL CROSS-SECTION NO. 379

TO BE USED ON ROUTE I-370

NOT TO SCALE

TYPICAL CROSS - SECTION OF IMPROVEMENT

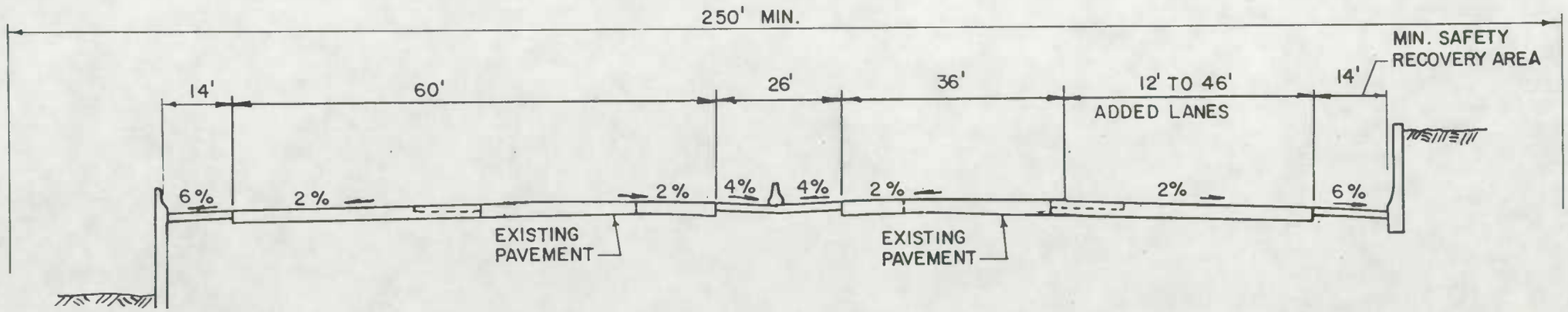

TYPICAL CROSS - SECTION NO. 382
TO BE USED ON ROUTE I-68

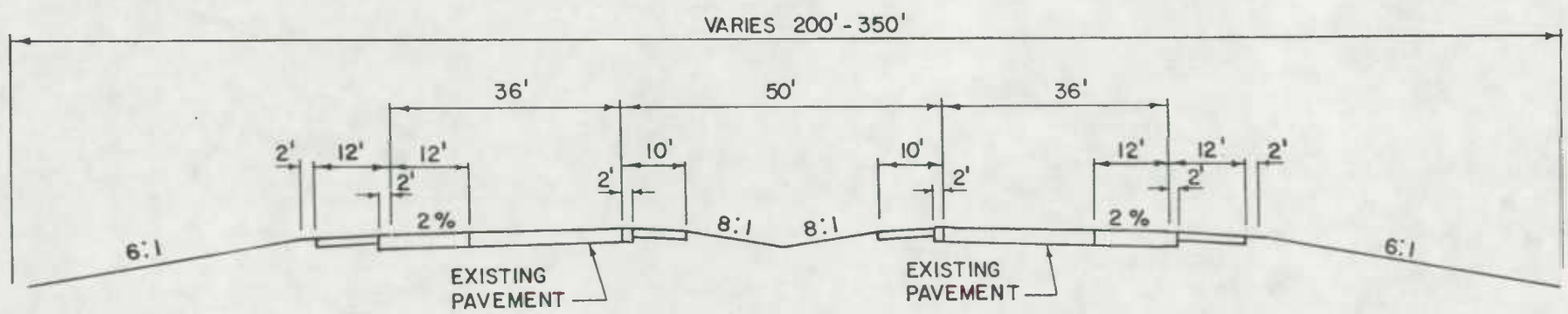

TYPICAL CROSS - SECTION NO. 383
TO BE USED ON ROUTE I-68

NOT TO SCALE

TYPICAL CROSS-SECTION OF IMPROVEMENT

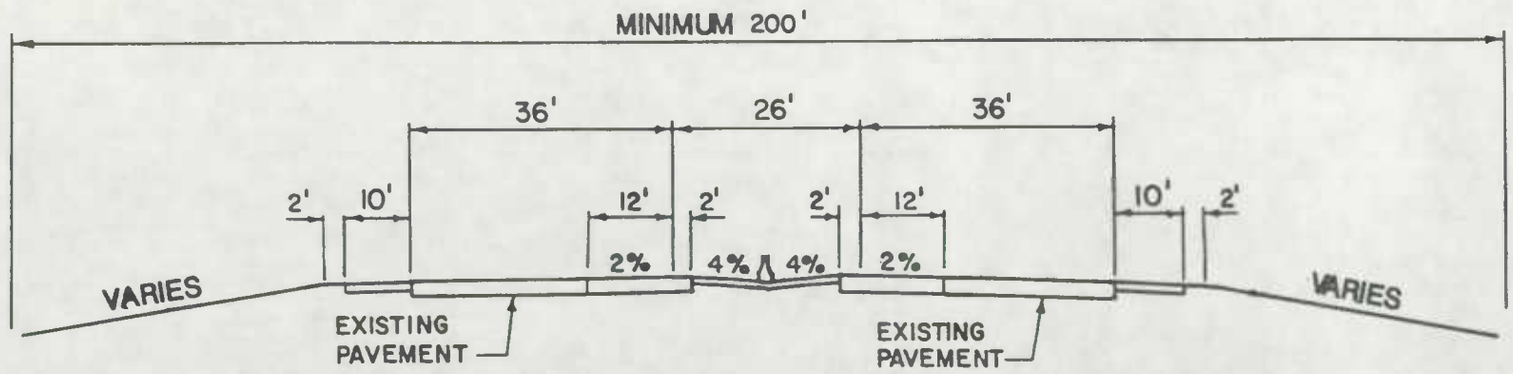

TYPICAL CROSS - SECTION NO. 384
TO BE USED ON ROUTE I-68

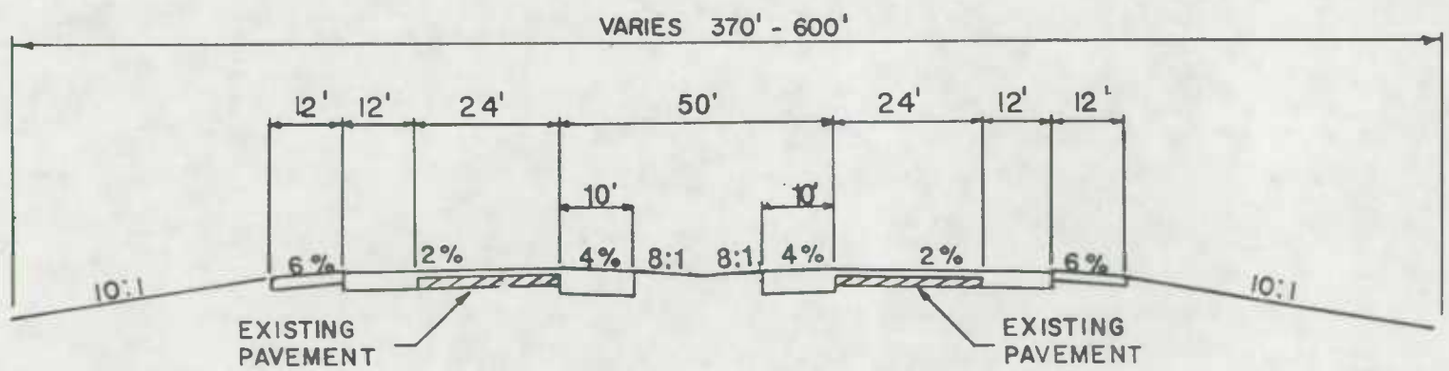

TYPICAL CROSS-SECTION NO. 385
TO BE USED ON ROUTE I-68

NOT TO SCALE

TYPICAL CROSS - SECTION OF IMPROVEMENT

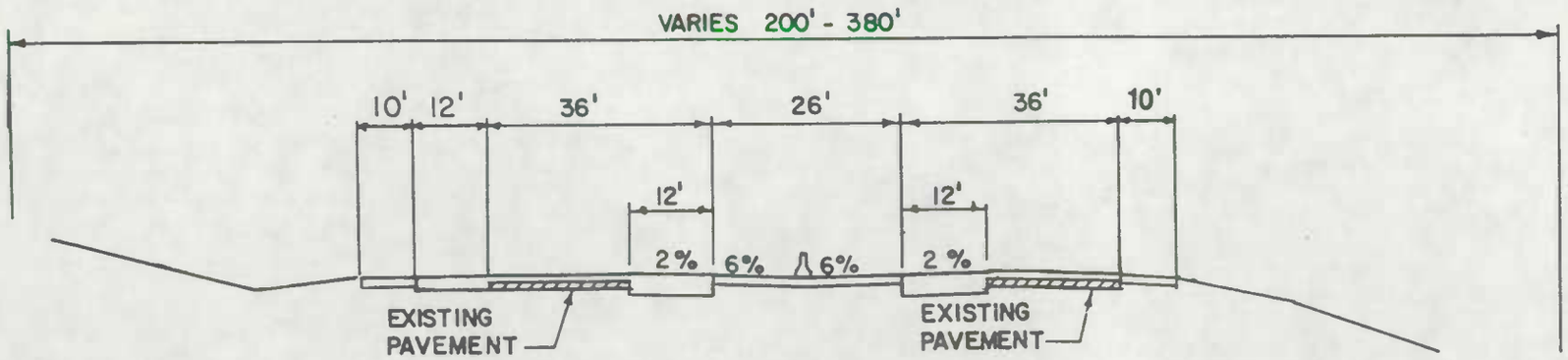

TYPICAL CROSS - SECTION NO. 386
TO BE USED ON ROUTE I-68

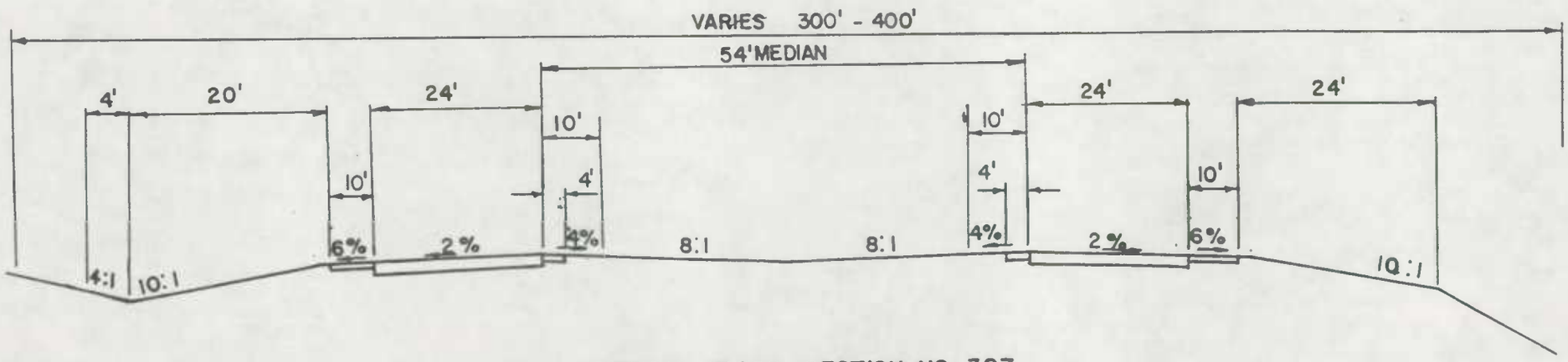

TYPICAL CROSS - SECTION NO. 387
TO BE USED ON ROUTE I-97

NOT TO SCALE

TYPICAL CROSS - SECTION OF IMPROVEMENT

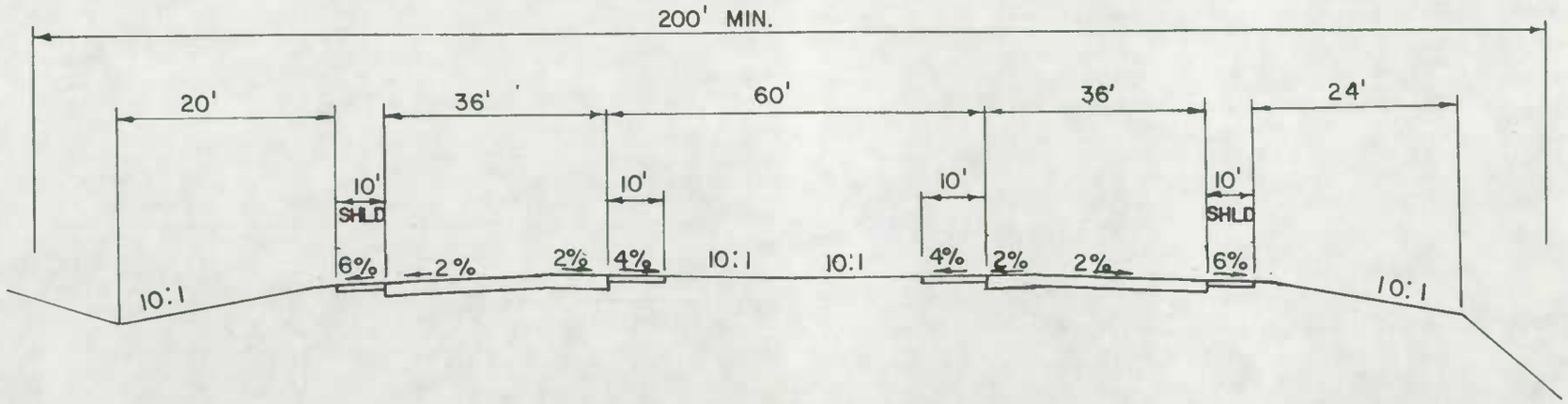

TYPICAL CROSS - SECTION NO. 388
TO BE USED ON ROUTE I-97

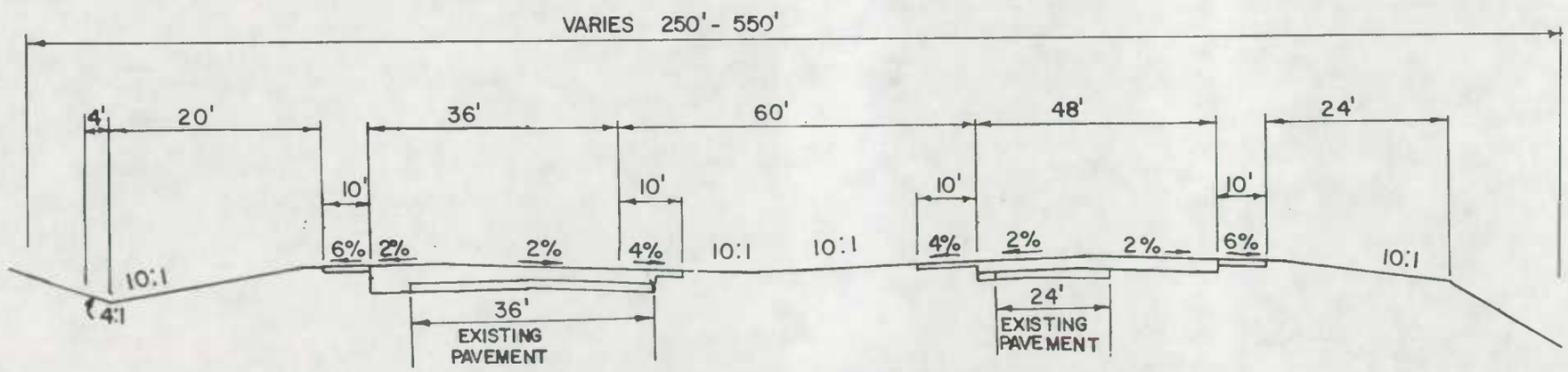

TYPICAL CROSS - SECTION NO. 389
TO BE USED ON ROUTE I-97

NOT TO SCALE

TYPICAL CROSS - SECTION OF IMPROVEMENT

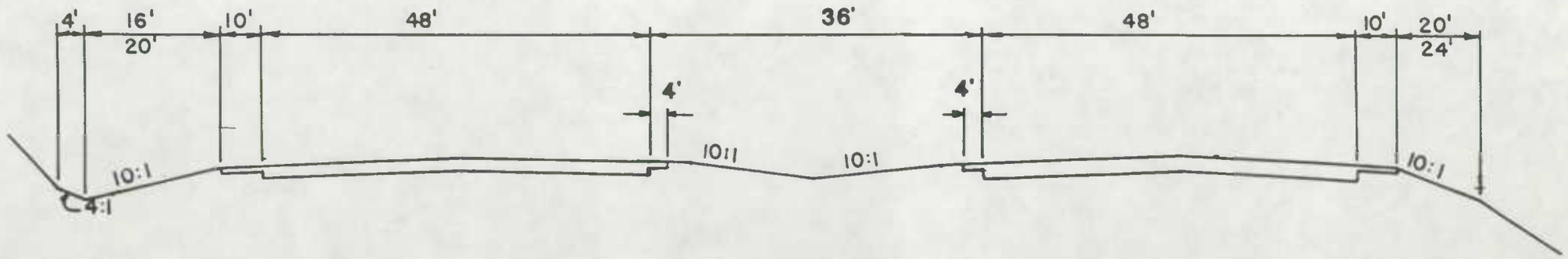

TYPICAL CROSS-SECTION NO. 390
TO BE USED ON ROUTE I-97

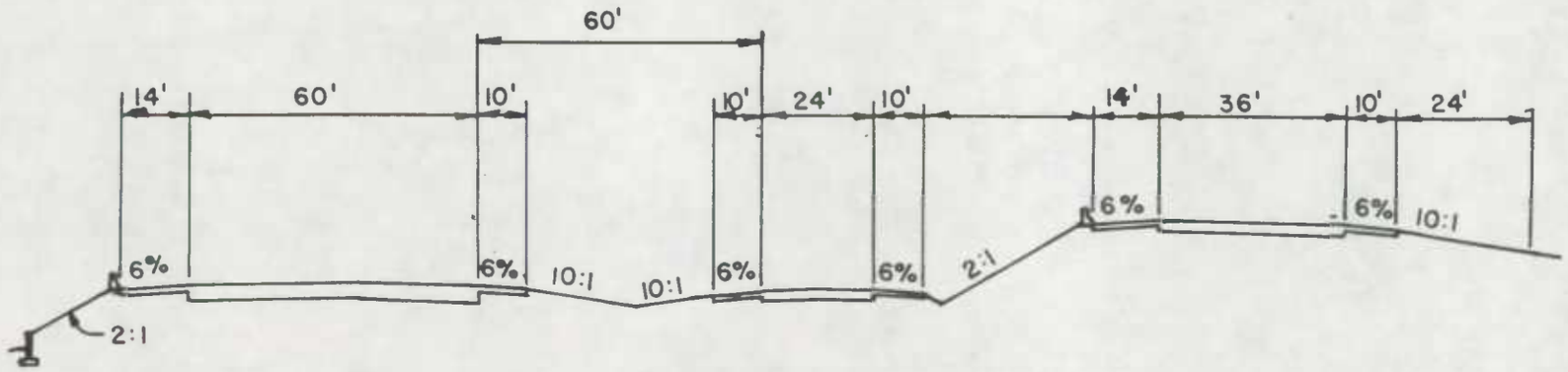

TYPICAL CROSS-SECTION NO. 391
TO BE USED ON ROUTE I-97

NOT TO SCALE

TYPICAL CROSS - SECTION OF IMPROVEMENT

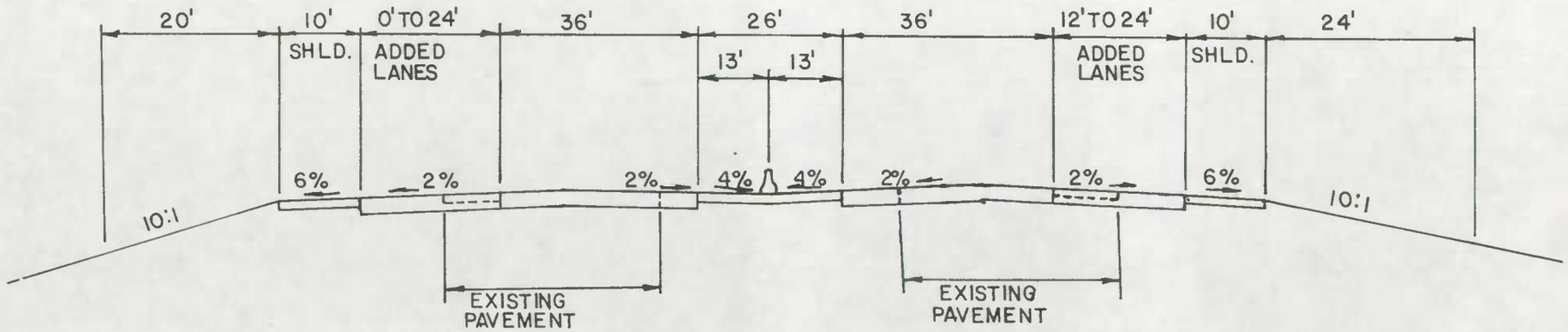

TYPICAL CROSS-SECTION NO. 392
TO BE USED ON ROUTE I-68

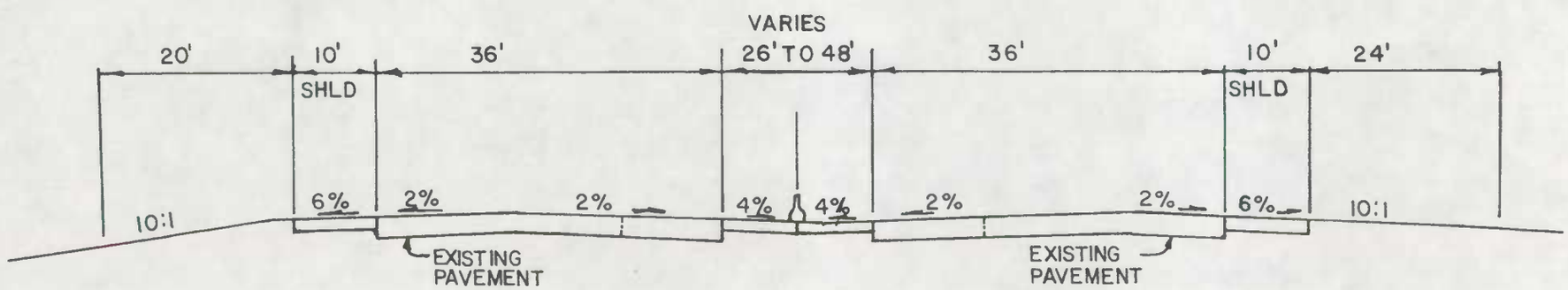

TYPICAL CROSS-SECTION NO. 393
TO BE USED ON ROUTE I-68

NOT TO SCALE

TYPICAL CROSS-SECTION OF IMPROVEMENT

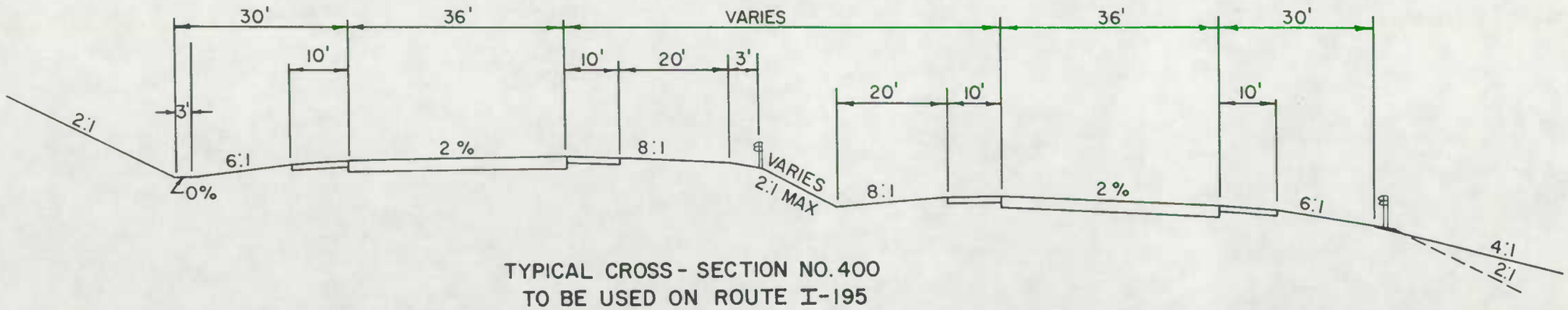

TYPICAL CROSS-SECTION NO. 400
TO BE USED ON ROUTE I-195

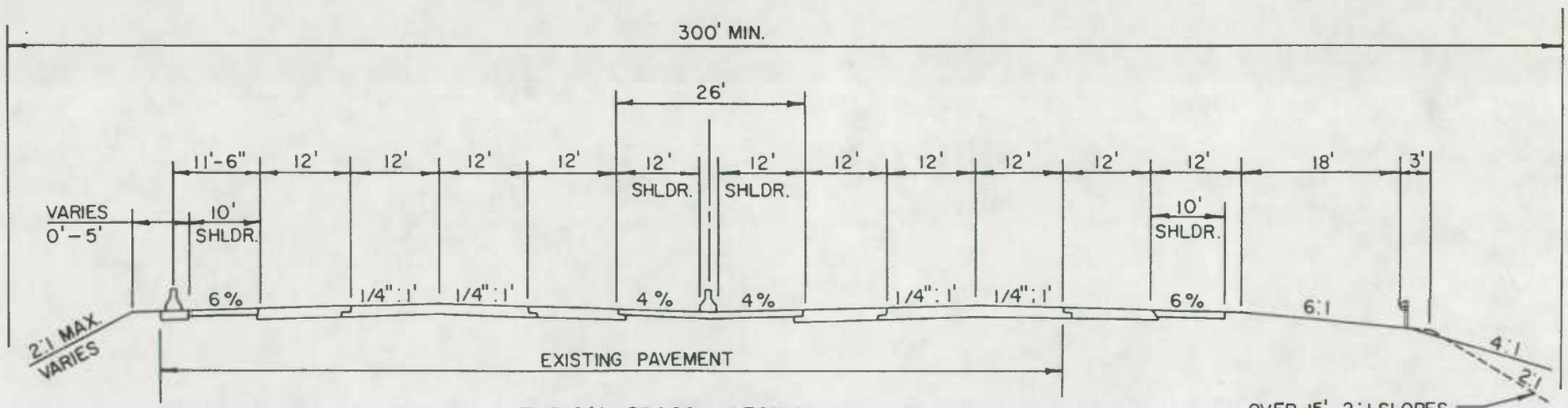

TYPICAL CROSS-SECTION NO. 401
TO BE USED ON ROUTE I-270

NOT TO SCALE

TYPICAL CROSS SECTION OF IMPROVEMENT

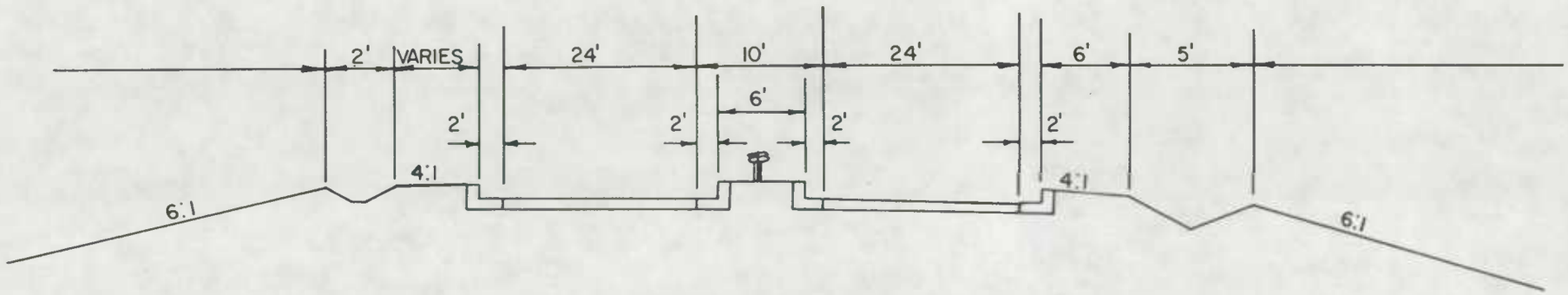

TYPICAL CROSS-SECTION NO. 402
TO BE USED ON ROUTE I-195

NOT TO SCALE

TYPICAL CROSS-SECTIONS OF IMPROVEMENT

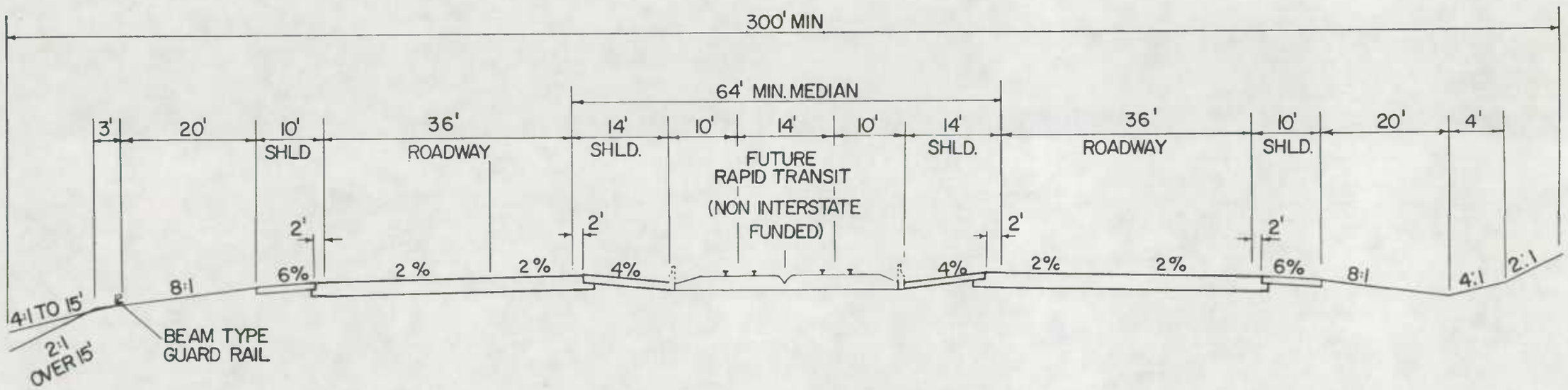

TYPICAL CROSS-SECTION NO. 404

TO BE USED ON ROUTE I-795

NOT TO SCALE

TYPICAL CROSS-SECTION OF IMPROVEMENT

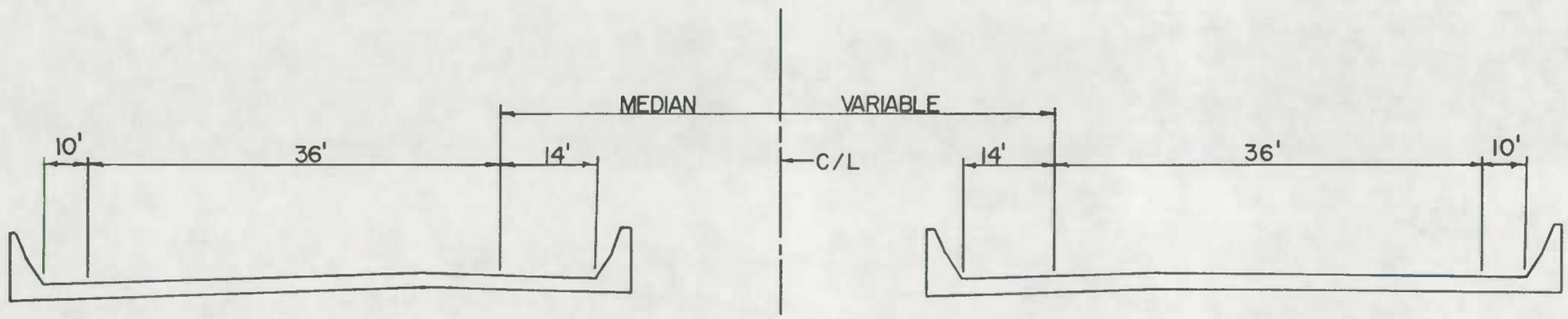

CROSS-SECTION NO. 405 FOR DUAL BRIDGES
TO BE USED ON ROUTE I-795

NOT TO SCALE

TYPICAL CROSS-SECTION OF IMPROVEMENT

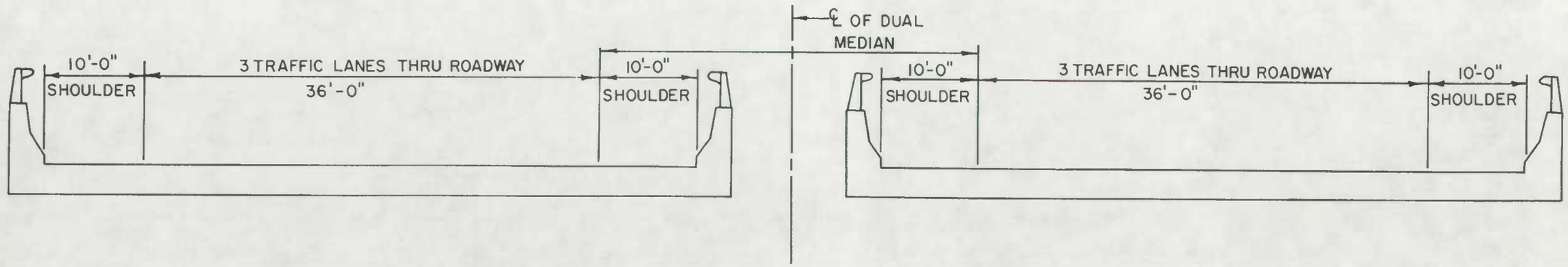

SECTION NO. 406: TYPICAL CROSS-SECTION FOR DUAL BRIDGE FOR I-195

TYPICAL CROSS - SECTION OF IMPROVEMENT

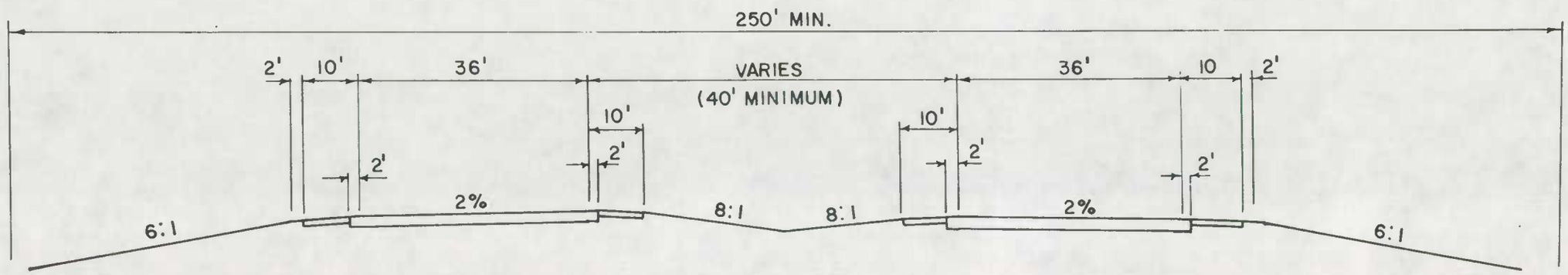

TYPICAL CROSS - SECTION NO. 407
TO BE USED ON ROUTE I-195

NOT TO SCALE

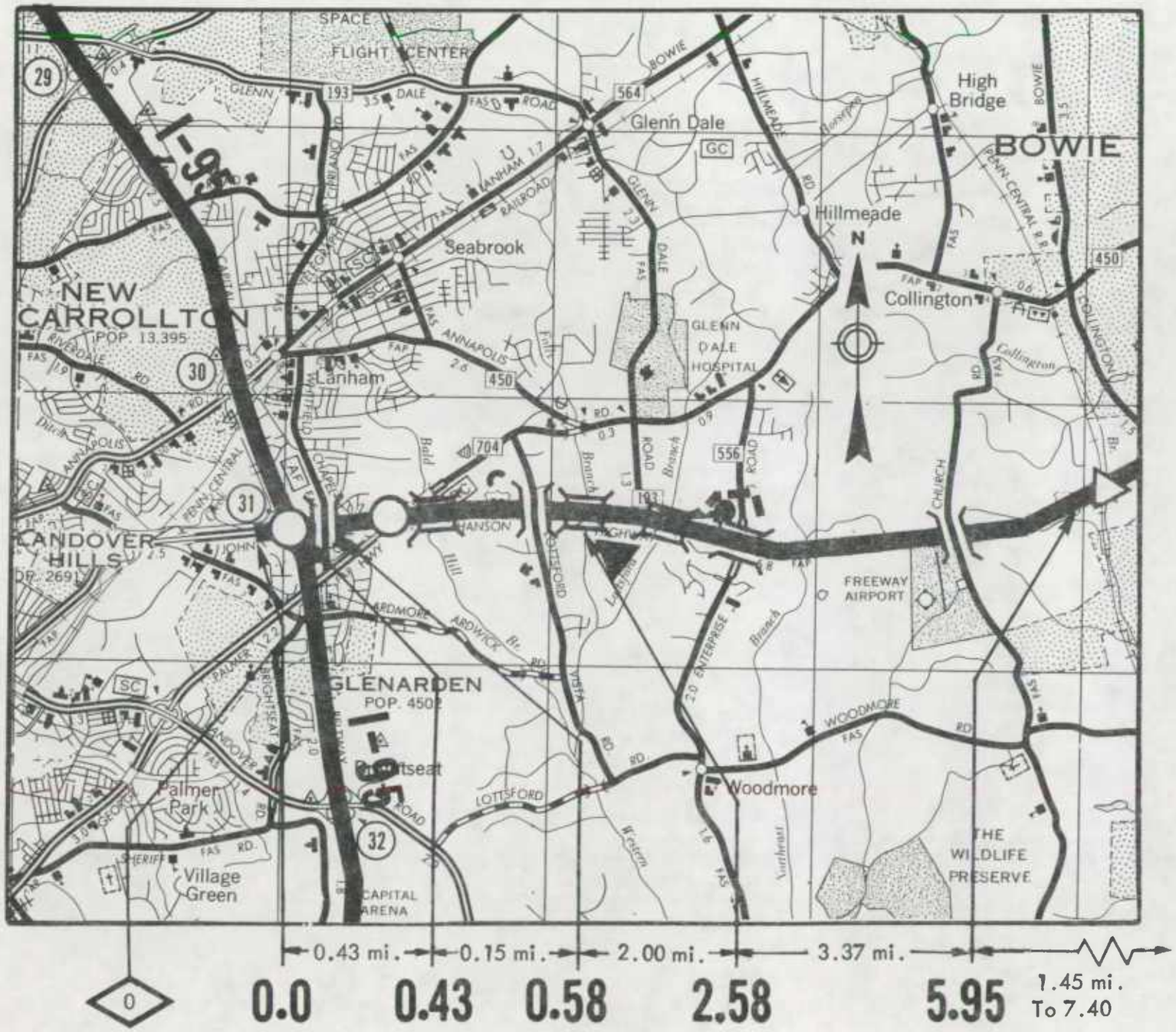

LEGEND

- Interstate Location Status 4 thru 1
- Interstate Location Status 5a(2) or 5a(3)
- Segments Approved Under Section 139 Title 23, USC, (non-chargeable).
- Interchange
- Highway Grade Separation -No Connection
- Railroad Grade Separation
- Combination Highway-Railroad Grade Separation
- Other Bridge
- Tunnel
- TOLL — Toll Bridge, Tunnel, Highway or Combination
- Frontage Road
- Terminated Cross Road
- Intersection At-Grade
- Urban Area Boundary
- Safety Rest Area
- 13 — Post Mileage
- 1 2 — Route Sections
- 2.8 — Estimate Section Number

MARYLAND

INTERSTATE ROUTE 68

SHEET 1 OF 3

DATE DECEMBER 31 1987

SCALE IN MILES

0 1 2

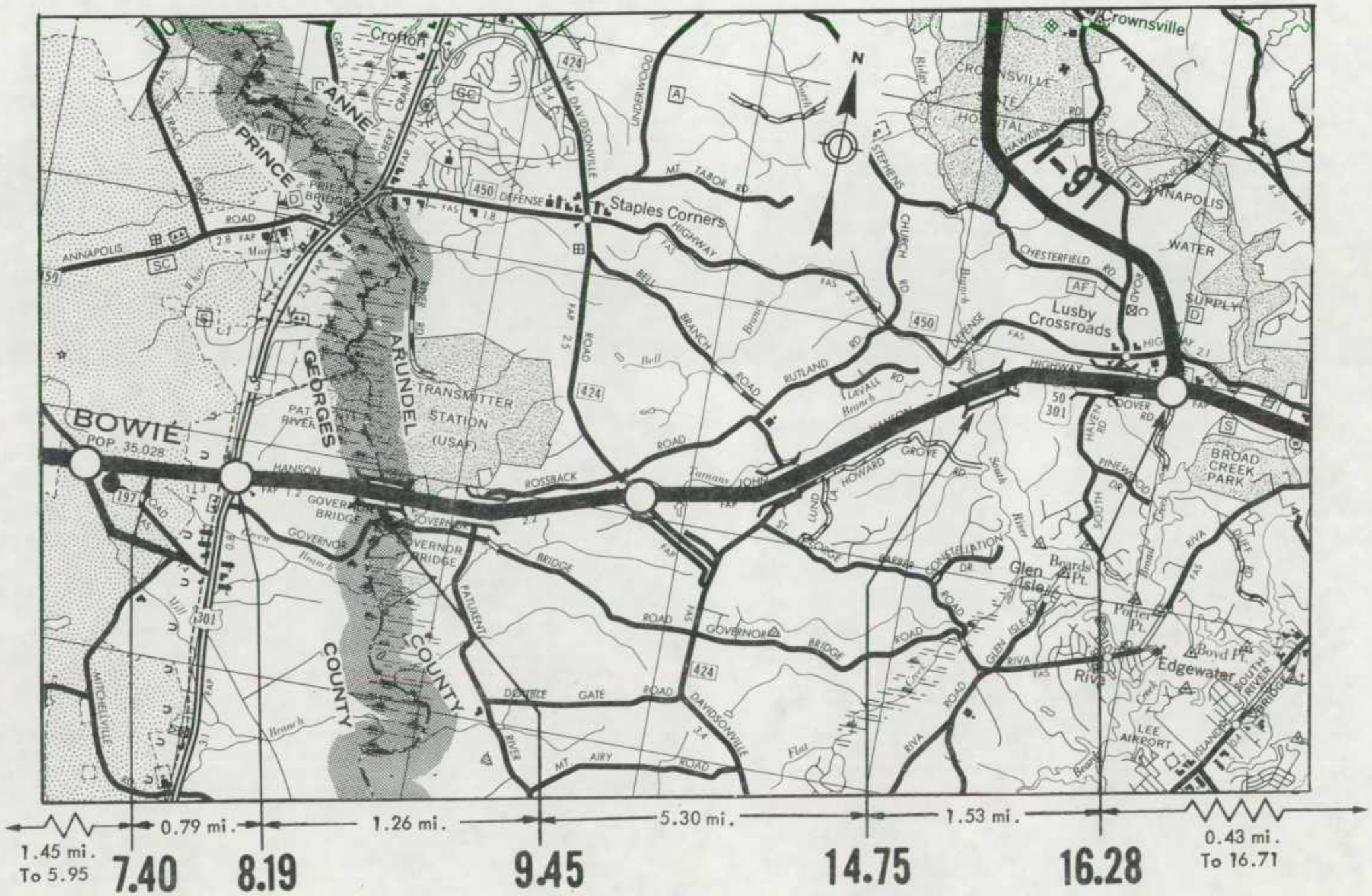

INTERSTATE ROUTE 68

SHEET 2 OF 3

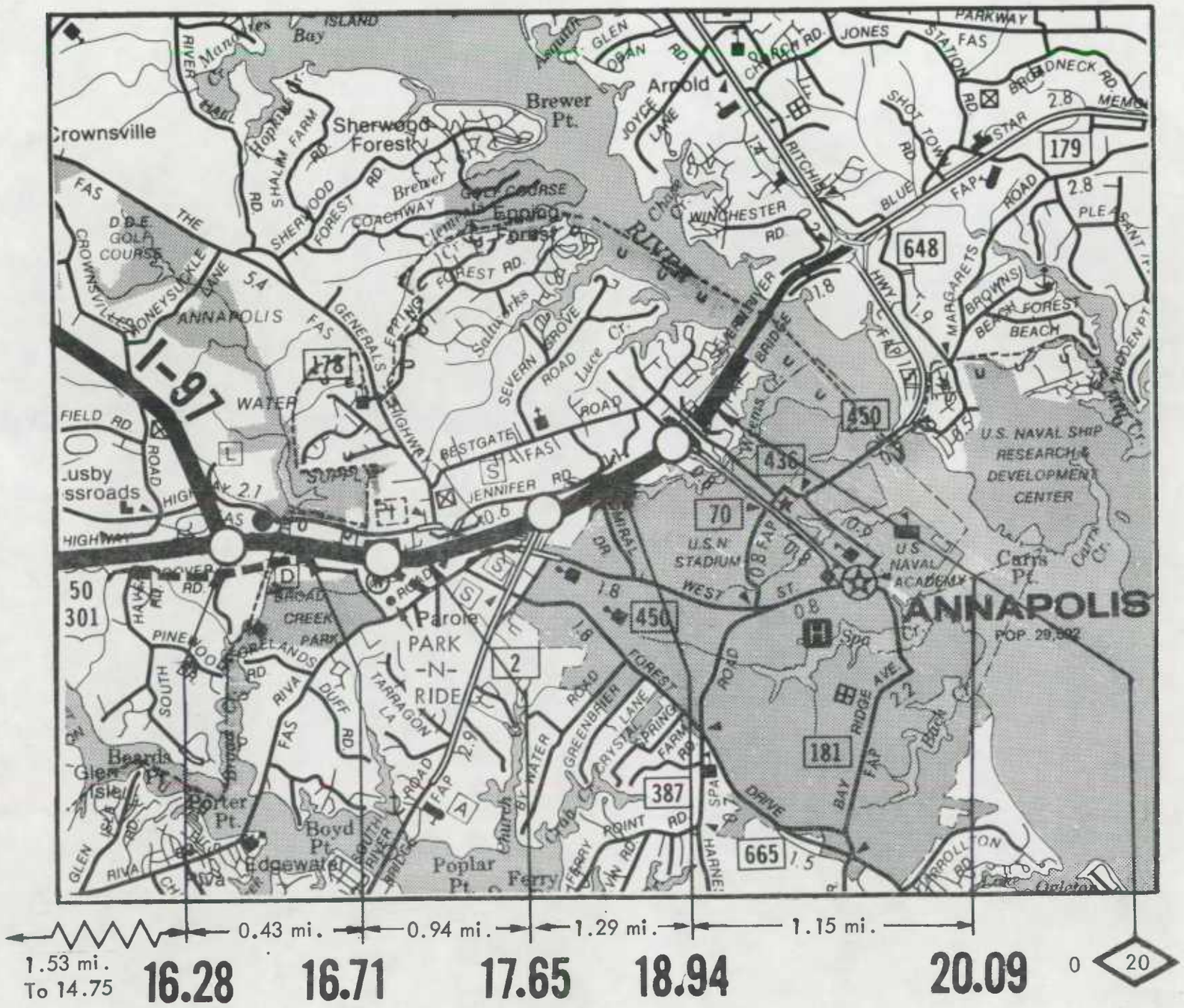

INTERSTATE ROUTE 68

SHEET 3 OF 3

STATE: MARYLAND CODE: 24

ROUTE: 068

TABLE B - DESIGN CLASSIFICATION AND COST ESTIMATE BY ESTIMATE SECTIONS WITH ROUTE TOTALS

ITEM	ESTIMATE SECTION MILEPOST							TOTAL FOR ROUTE
	0.00	0.43	0.58	2.58	5.95	7.40	8.19	
1. FINANCE CODE	23	23	23	23	23	23	23	
2. SECTION LENGTH	0.43	0.15	2.00	3.37	1.45	0.79	1.26	
3. CLASS: RURAL (R) OR URBAN AREA I.D. (NAME AND CODE)	U	U	U	U	U	U	R	
	796	796	796	796	796	796		
	WASHINGTON	WASHINGTON	WASHINGTON	WASHINGTON	WASHINGTON	WASHINGTON		
4. MILEAGE INCREMENT: CODE(1,2, OR 3)	1	1	1	1	1	1	1	
5. ROUTE SIGNIFICANCE: CODE (N OR L)	N	N	N	N	N	N	N	
6. DESIGN SPEED (V)	70	70	70	70	70	70	70	
7. BASE YEAR TRAFFIC (1982 ADT)	52,000	70,500	70,500	49,000	46,000	46,000	46,000	
8. TRAFFIC A. DESIGN YEAR	2006	2006	2006	2006	2006	2006	2006	
B. ADT DESIGN YEAR	102,100	102,100	102,100	88,300	88,300	88,300	59,100	
C. DHV DESIGN YEAR	9,370	9,370	9,370	7,550	7,550	7,550	5,470	
D. DIRECTION DISTRIBUTION FACTOR	60	60	60	60	60	60	55	
E. T% TRUCKS DESIGN YEAR DHV	04	04	04	04	04	04	04	
F. T% TRUCKS DESIGN YEAR ADT	10	10	10	10	10	10	10	
9. NUMBER LANES TO BE CONSTRUCTED THIS ESTIMATE	02	02	02	02	02	02	02	
10. ULTIMATE NUMBER THROUGH TRAFFIC LANES	06	06	06	06	06	06	06	
11. TYPICAL CROSS-SECTION REFERENCE	392	392	386	383	383	383	383	
12. RIGHT-OF-WAY WIDTH: PREVAILING	300	300	300	250	300	300	300	
13. MEDIAN WIDTH: PREVAILING	26	26	26	50	50	50	50	
14. STATUS OF DEVELOPMENT DEC. 31, 1983 (PR-511)	2A2F	2A2F	2A2F	2A2F	2A2F	2A2F	2A2F	
WORK CLASSIFICATION	ESTIMATED COSTS (1,000 DOLLARS)							
1. PRELIMINARY ENGINEERING	0	0	0	0	0	0	0	
2. R.O.W. A. ACQUISITION	603	210	2,599	3,217	1,384	754	1,212	
B. RELOCATION	0	0	0	0	0	0	0	
3. UTILITY ADJUSTMENTS	0	0	423	112	897	91	145	
4. EROSION CONTROL, CLEAR, GRUB, GRADE, DRAIN, & MINOR STRUCTURES	0	0	5,599	4,819	5,170	6,227	6,227	
5. SUBBASE,BASE, SURFACING, & SHOULDERS	0	0	10,754	9,332	8,529	6,440	6,440	
6. R.R. GRADE SEPARATIONS	0	0	0	0	0	0	0	
7. HIGHWAY GRADE SEPARATIONS WITHOUT RAMPS	0	0	2,170	1,242	0	0	0	
8. INTERCHANGES	24,403	11,164	2,035	0	3,976	5,964	5,964	
9. OTHER BRIDGES, TUNNELS, AND WALLS	0	0	6,515	0	2,715	0	0	
10. TRAFFIC CONTROL DEVICES	0	0	3,668	891	2,837	1,102	1,102	
11. WEIGH STATIONS, PEDESTRIAN AND BICYCLE FACILITIES	0	0	0	0	0	0	0	
12. SAFETY WORK ON COMPLETED SECTIONS	0	0	0	0	0	0	0	
13. NOISE ABATEMENT MEASURES	0	0	1,405	0	1,226	582	582	
14. ROADSIDE IMPROVEMENT A. LANDSCAPE PLANTING	0	0	0	0	0	0	0	
B. REST AREAS & OVERLOOKS	0	0	0	0	0	0	0	
15. ALL OTHER ITEMS: MAINT. OF TRAF., TRAINING, MOBIL, ETC.	0	0	3,687	3,057	4,605	1,458	1,458	
16. SUBTOTAL, LINES 4 THRU 15	24,403	11,164	35,834	19,341	29,058	21,773	21,773	
17. CONSTRUCTION ENGINEERING & CONTINGENCIES, 15% of LINE 16	3,660	1,675	5,375	2,901	4,359	3,266	3,266	
18. TOTAL COST OF CONSTRUCTION, LINES 16 & 17	28,063	12,838	41,209	22,242	33,416	25,039	25,039	
19. TOTAL ESTIMATE COST, LINES 1, 2, 3, & 18	28,666	13,048	44,231	25,571	35,697	25,884	26,396	

** ROUNDED TO ZERO

STATE: MARYLAND CODE: 24

ROUTE: 068

TABLE B - DESIGN CLASSIFICATION AND COST ESTIMATE BY ESTIMATE SECTIONS WITH ROUTE TOTALS

ITEM	ESTIMATE SECTION MILEPOST							TOTAL FOR ROUTE
	9.45	14.75	16.28	16.71	17.65	18.94		
1. FINANCE CODE	23	23	23	23	23	23		
2. SECTION LENGTH	5.30	1.53	0.43	0.94	1.29	1.15		20.09
3. CLASS: RURAL (R) OR URBAN AREA I.D. (NAME AND CODE)	R	R	R	U	U	U		
				258	258	258		
				ANNAPOLIS	ANNAPOLIS	ANNAPOLIS		
4. MILEAGE INCREMENT: CODE(1,2, OR 3)	1	1	1	1	1	1		
5. ROUTE SIGNIFICANCE: CODE (N OR L)	N	N	N	N	N	N		
6. DESIGN SPEED (V)	70	70	70	70	70	70		
7. BASE YEAR TRAFFIC (1982 ADT)	47,400	47,000	60,000	60,000	64,100	64,100		
8. TRAFFIC A. DESIGN YEAR	2006	2006	2006	2006	2006	2006		
B. ADT DESIGN YEAR	59,100	52,700	91,400	58,300	81,600	81,600		
C. DHV DESIGN YEAR	5,470	4,980	9,140	5,830	8,160	8,160		
D. DIRECTION DISTRIBUTION FACTOR	55	55	55	55	55	55		
E. T% TRUCKS DESIGN YEAR DHV	04	04	06	06	06	06		
F. T% TRUCKS DESIGN YEAR ADT	10	10	08	08	08	08		
9. NUMBER LANES TO BE CONSTRUCTED THIS ESTIMATE	02	02	02	02	02	02		
10. ULTIMATE NUMBER THROUGH TRAFFIC LANES	06	06	06	06	06	06		
11. TYPICAL CROSS-SECTION REFERENCE	385	384	386	386	386	384		
12. RIGHT-OF-WAY WIDTH: PREVAILING	350	200	400	400	300	300		
13. MEDIAN WIDTH: PREVAILING	50	26	26	26	26	26		
14. STATUS OF DEVELOPMENT DEC. 31, 1983 (PR-511)	2A2F	2A2F	2A1F	2A1F	2A2F	2A2F		
WORK CLASSIFICATION	ESTIMATED COSTS (1,000 DOLLARS)							
1. PRELIMINARY ENGINEERING	0	0	0	0	0	0		
2. R.O.W. A. ACQUISITION	279	3,149	891	1,947	8,102	8,504		32,851
B. RELOCATION	0	0	0	0	0	0		
3. UTILITY ADJUSTMENTS	127	0	0	0	1,211	57		3,063
4. EROSION CONTROL, CLEAR, GRUB, GRADE, DRAIN, & MINOR STRUCTURES	6,884	2,132	0	0	3,868	3,505		44,431
5. SUBBASE,BASE, SURFACING, & SHOULDERS	8,472	2,659	0	0	3,651	3,378		59,655
6. R.R. GRADE SEPARATIONS	0	0	0	0	0	0		
7. HIGHWAY GRADE SEPARATIONS WITHOUT RAMPS	6,010	536	0	0	5,556	2,193		17,707
8. INTERCHANGES	3,972	6,128	0	0	9,973	2,812		76,391
9. OTHER BRIDGES, TUNNELS, AND WALLS	2,199	0	0	0	4,228	1,255		16,912
10. TRAFFIC CONTROL DEVICES	2,342	1,764	0	0	1,188	1,132		16,026
11. WEIGH STATIONS, PEDESTRIAN AND BICYCLE FACILITIES	6	0	0	0	0	197		203
12. SAFETY WORK ON COMPLETED SECTIONS	0	0	0	0	0	0		
13. NOISE ABATEMENT MEASURES	0	0	0	0	0	0		3,795
14. ROADSIDE IMPROVEMENT A. LANDSCAPE PLANTING	0	0	0	0	0	0		
B. REST AREAS & OVERLOOKS	0	0	0	0	0	0		
15. ALL OTHER ITEMS: MAINT. OF TRAF., TRAINING, MOBIL, ETC.	3,515	1,604	0	0	2,151	2,583		24,118
16. SUBTOTAL, LINES 4 THRU 15	33,401	14,823	0	0	30,615	17,055		259,240
17. CONSTRUCTION ENGINEERING & CONTINGENCIES, 15% of LINE 16	5,010	2,224	0	0	4,592	2,558		38,886
18. TOTAL COST OF CONSTRUCTION, LINES 16 & 17	38,411	17,047	0	0	35,207	19,613		298,124
19. TOTAL ESTIMATE COST, LINES 1, 2, 3, & 18	38,817	20,196	891	1,947	44,520	28,174		334,038

** ROUNDED TO ZERO

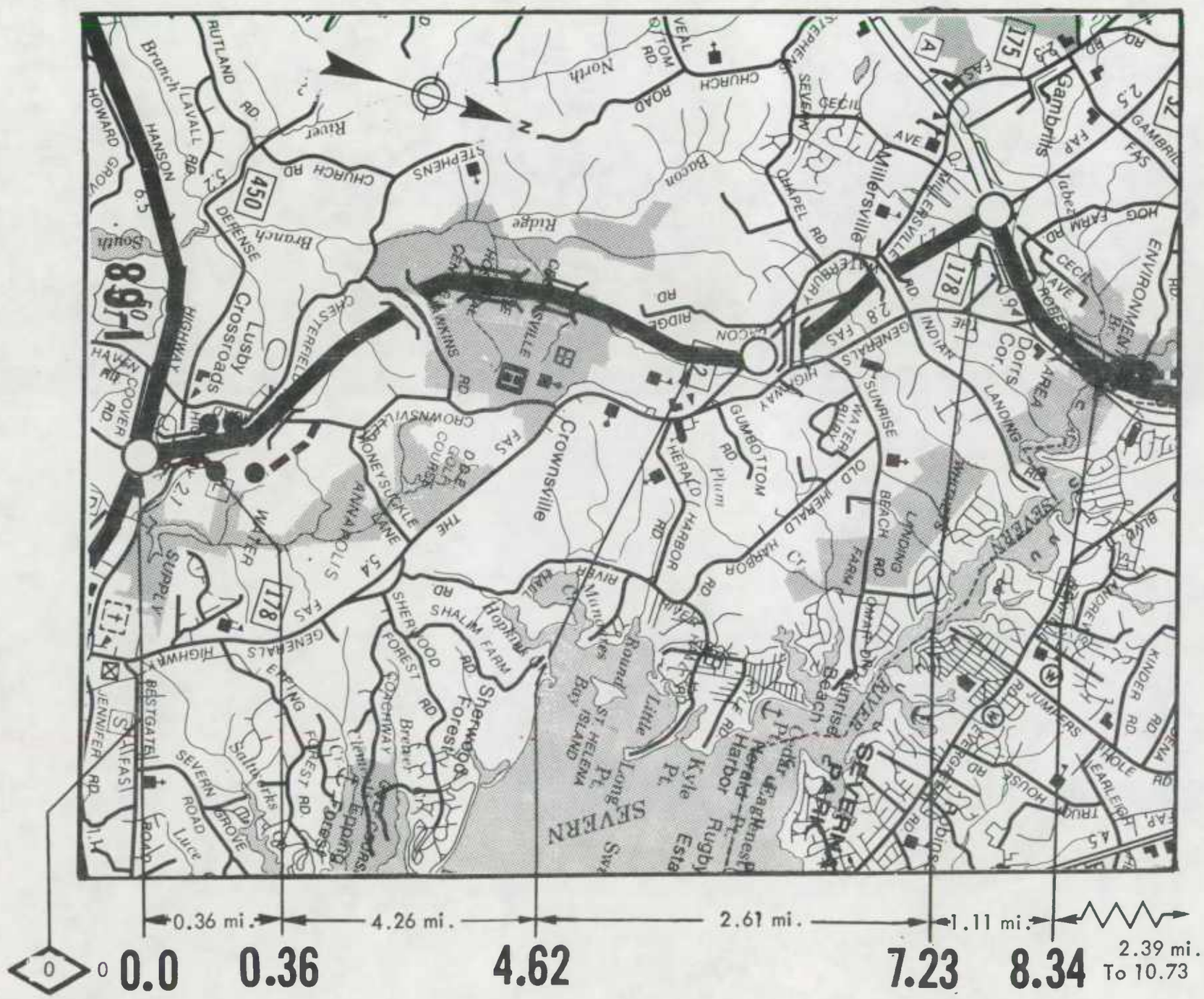

LEGEND

- Interstate Location Status 4 thru 1
- Interstate Location Status 5a(2) or 5a(3)
- Segments Approved Under Section 139 Title 23, USC, (non-chargeable).
- Interchange
- Highway Grade Separation -No Connection
- Railroad Grade Separation
- Combination Highway-Railroad Grade Separation
- Other Bridge
- Tunnel
- TOLL — Toll Bridge, Tunnel, Highway or Combination
- Frontage Road
- Terminated Cross Road
- Intersection At-Grade
- Urban Area Boundary
- Safety Rest Area
- 13 — Post Mileage
- 1 2 — Route Sections
- 2.8 — Estimate Section Number

MARYLAND

INTERSTATE ROUTE 97

SHEET 1 OF 2

DATE : DECEMBER 31, 1987

SCALE IN MILES

0 1 2

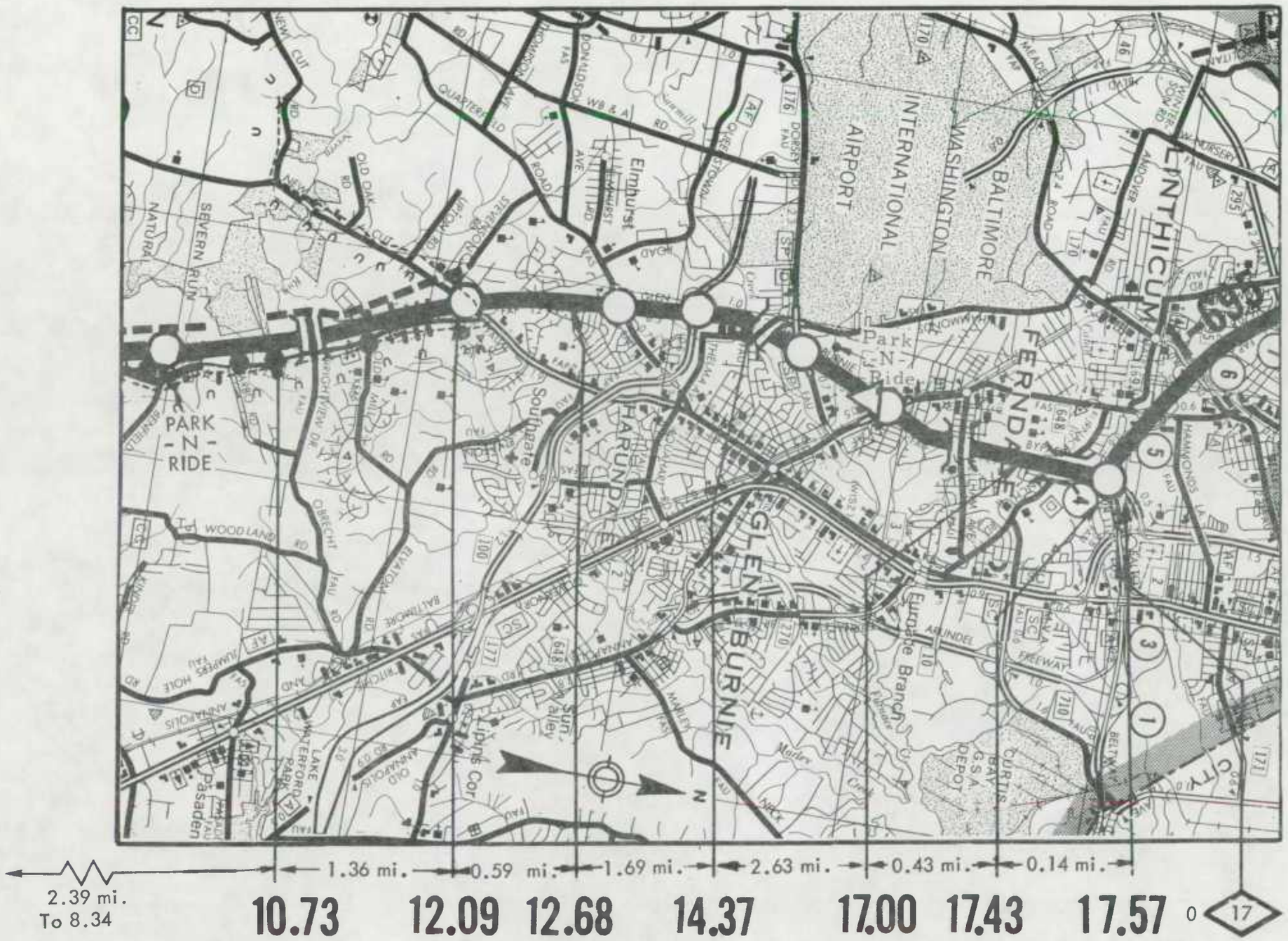

INTERSTATE ROUTE 97

SHEET 2 OF 2

STATE: MARYLAND CODE: 24

ROUTE: 097

TABLE B - DESIGN CLASSIFICATION AND COST ESTIMATE BY ESTIMATE SECTIONS WITH ROUTE TOTALS

ITEM	ESTIMATE SECTION MILEPOST							TOTAL FOR ROUTE
	0.00	0.36	4.62	7.23	8.34	10.73	12.09	
1. FINANCE CODE	22	22	22	23	23	23	23	
2. SECTION LENGTH	0.36	4.26	2.61	1.11	2.39	1.36	0.59	
3. CLASS: RURAL (R) OR URBAN AREA I.D. (NAME AND CODE)	R	R	R	R	R	R	U	
							256	
							BALTIMORE	
4. MILEAGE INCREMENT: CODE(1,2, OR 3)	1	1	1	1	1	1	1	
5. ROUTE SIGNIFICANCE: CODE (N OR L)	N	N	N	N	N	N	N	
6. DESIGN SPEED (V)	70	70	70		70	70	70	
7. BASE YEAR TRAFFIC (1982 ADT)	25,000	25,000	25,000	,	42,000	45,000	55,000	
8. TRAFFIC A. DESIGN YEAR	2006	2006	2006	20	2006	2006	2006	
B. ADT DESIGN YEAR	42,000	42,000	42,000	,	80,000	80,000	83,000	
C. DHV DESIGN YEAR	4,200	4,200	4,200	,	8,000	8,000	8,300	
D. DIRECTION DISTRIBUTION FACTOR	60	60	60		60	60	60	
E. T% TRUCKS DESIGN YEAR DHV	08	08	08	76	10	10	10	
F. T% TRUCKS DESIGN YEAR ADT	10	10	10	76	14	14	14	
9. NUMBER LANES TO BE CONSTRUCTED THIS ESTIMATE	04	04	04	06	04	04	02	
10. ULTIMATE NUMBER THROUGH TRAFFIC LANES	04	04	04	06	06	06	06	
11. TYPICAL CROSS-SECTION REFERENCE	387	387	387	, ,	388	388	388	
12. RIGHT-OF-WAY WIDTH: PREVAILING	450	450	300		280	250	250	
13. MEDIAN WIDTH: PREVAILING	54	54	54		60	60	60	
14. STATUS OF DEVELOPMENT DEC. 31, 1983 (PR-511)	2A1F	2A1F	2A1F	2A1F	2A2F	2A1F	2A1F	
WORK CLASSIFICATION					ESTIMATED COSTS (1,000 DOLLARS)			
1. PRELIMINARY ENGINEERING	0	0	0	0	0	0	0	
2. R.O.W. A. ACQUISITION	32	200	0	0	4,766	1,225	532	
B. RELOCATION	0	0	0	0	0	0	0	
3. UTILITY ADJUSTMENTS	0	0	0	0	222	0	0	
4. EROSION CONTROL, CLEAR, GRUB, GRADE, DRAIN, & MINOR STRUCTURES	0	0	0	0	8,442	0	0	
5. SUBBASE,BASE, SURFACING, & SHOULDERS	0	0	0	0	13,809	0	0	
8. R.R. GRADE SEPARATIONS	0	0	0	0	0	0	0	
7. HIGHWAY GRADE SEPARATIONS WITHOUT RAMPS	0	0	0	0	0	0	0	
8. INTERCHANGES	0	0	0	0	2,473	0	0	
9. OTHER BRIDGES, TUNNELS, AND WALLS	0	0	0	0	3,040	0	0	
10. TRAFFIC CONTROL DEVICES	0	194	254	108	1,049	0	0	
11. WEIGH STATIONS , PEDESTRIAN AND BICYCLE FACILITIES	0	0	0	0	0	0	0	
12. SAFETY WORK ON COMPLETED SECTIONS	0	0	0	0	0	0	0	
13. NOISE ABATEMENT MEASURES	0	0	0	0	0	0	0	
14. ROADSIDE IMPROVEMENT A. LANDSCAPE PLANTING	0	0	0	0	0	0	0	
B. REST AREAS & OVERLOOKS	0	0	0	0	0	0	0	
15. ALL OTHER ITEMS: MAINT. OF TRAF., TRAINING, MOBIL, ETC.	41	300	0	0	2,645	0	0	
16. SUBTOTAL, LINES 4 THRU 15	41	494	254	108	31,458	0	0	
17. CONSTRUCTION ENGINEERING & CONTINGENCIES, 15% of LINE 18	6	74	38	16	4,719	0	0	
18. TOTAL COST OF CONSTRUCTION, LINES 18 & 17	47	568	292	124	36,177	0	0	
19. TOTAL ESTIMATE COST, LINES 1, 2, 3, & 18	79	768	292	124	41,165	1,225	532	

** ROUNDED TO ZERO

STATE: MARYLAND CODE: 24

ROUTE: 097

TABLE B - DESIGN CLASSIFICATION AND COST ESTIMATE BY ESTIMATE SECTIONS WITH ROUTE TOTALS

ITEM	ESTIMATE SECTION MILEPOST							TOTAL FOR ROUTE
	12.68	14.37	17.00	17.43				
1. FINANCE CODE	23	23	23	23				
2. SECTION LENGTH	1.69	2.63	0.43	0.14				17.57
3. CLASS: RURAL (R) OR URBAN AREA I.D. (NAME AND CODE)	U	U	U	U				
	256	256	256	256				
	BALTIMORE	BALTIMORE	BALTIMORE	BALTIMORE				
4. MILEAGE INCREMENT: CODE(1,2, OR 3)	1	1	1	1				
5. ROUTE SIGNIFICANCE: CODE (N OR L)	N	N	N	N				
6. DESIGN SPEED (V)	70	70	70	70				
7. BASE YEAR TRAFFIC (1982 ADT)	66,200	73,500	73,500	73,500				
8. TRAFFIC A. DESIGN YEAR	2006	2006	2006	2006				
B. ADT DESIGN YEAR	83,000	83,000	121,000	121,000				
C. DHV DESIGN YEAR	8,300	8,300	12,100	12,100				
D. DIRECTION DISTRIBUTION FACTOR	60	60	60	60				
E. T% TRUCKS DESIGN YEAR DHV	10	10	10	10				
F. T% TRUCKS DESIGN YEAR ADT	14	14	14	14				
9. NUMBER LANES TO BE CONSTRUCTED THIS ESTIMATE	02	02	02	04				
10. ULTIMATE NUMBER THROUGH TRAFFIC LANES	06	08	08	08				
11. TYPICAL CROSS-SECTION REFERENCE	389	390	391	391				
12. RIGHT-OF-WAY WIDTH: PREVAILING	400	300	300	300				
13. MEDIAN WIDTH: PREVAILING	60	36	60	60				
14. STATUS OF DEVELOPMENT DEC. 31, 1983 (PR-511)	2A2F	2A2F	2A1F	2A1F				
WORK CLASSIFICATION	ESTIMATED COSTS (1,000 DOLLARS)							
1. PRELIMINARY ENGINEERING	0	0	0	0				
2. R.O.W. A. ACQUISITION	3,157	9,064	1,482	317				20,775
B. RELOCATION	0	0	0	0				
3. UTILITY ADJUSTMENTS	257	1,237	0	0				1,716
4. EROSION CONTROL, CLEAR, GRUB, GRADE, DRAIN, & MINOR STRUCTURES	9,441	9,605	0	0				27,488
5. SUBBASE,BASE, SURFACING, & SHOULDERS	11,871	10,301	0	0				35,981
6. R.R. GRADE SEPARATIONS	0	0	0	0				
7. HIGHWAY GRADE SEPARATIONS WITHOUT RAMPS	0	3,816	0	0				3,816
8. INTERCHANGES	14,081	28,157	0	0				44,711
9. OTHER BRIDGES, TUNNELS, AND WALLS	721	0	0	0				3,761
10. TRAFFIC CONTROL DEVICES	1,684	1,692	0	0				4,981
11. WEIGH STATIONS, PEDESTRIAN AND BICYCLE FACILITIES	0	0	0	0				
12. SAFETY WORK ON COMPLETED SECTIONS	0	0	0	0				
13. NOISE ABATEMENT MEASURES	8,626	3,660	0	0				12,286
14. ROADSIDE IMPROVEMENT A. LANDSCAPE PLANTING	0	0	0	0				
B. REST AREAS & OVERLOOKS	0	0	0	0				
15. ALL OTHER ITEMS: MAINT. OF TRAF., TRAINING, MOBIL, ETC.	5,479	1,818	0	0				10,283
16. SUBTOTAL, LINES 4 THRU 15	51,902	59,048	0	0				143,305
17. CONSTRUCTION ENGINEERING & CONTINGENCIES, 15% of LINE 16	7,784	8,857	0	0				21,494
18. TOTAL COST OF CONSTRUCTION, LINES 16 & 17	59,686	67,905	0	0				164,799
19. TOTAL ESTIMATE COST, LINES 1, 2, 3, & 18	63,100	79,206	1,482	317				187,290

** ROUNDED TO ZERO

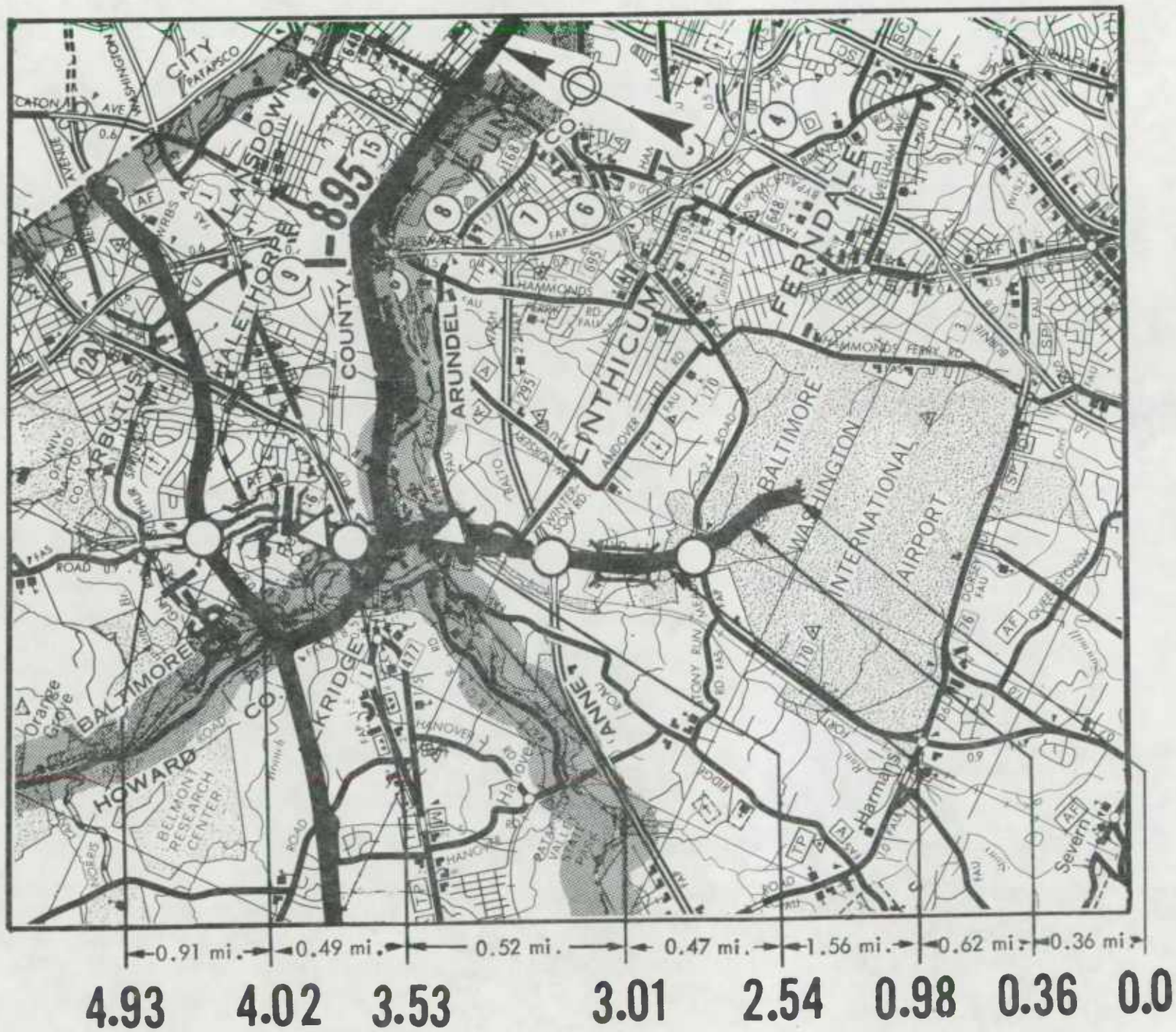

LEGEND

- Interstate Location Status 4 thru 1
- Interstate Location Status 5a(2) or 5a(3)
- Segments Appraved Under Section 139 Title 23, USC, (non-chargeable).
- Interchange
- Highway Grade Separation -No Connection
- Railroad Grade Separation
- Combination Highway-Railroad Grade Separation
- Other Bridge
- Tunnel
- TOLL — Toll Bridge, Tunnel, Highway or Combination
- Frontage Road
- Terminated Cross Road
- Intersection At-Grade
- Urban Area Boundary
- Safety Rest Area
- 13 — Post Mileage
- 1 2 — Route Sections
- 2.8 — Estimate Section Number

MARYLAND

INTERSTATE ROUTE 195

SHEET 1 OF 1

DATE DECEMBER 31.1987

SCALE IN MILES

0 1 2

STATE: MARYLAND CODE: 24

ROUTE: 195

TABLE B - DESIGN CLASSIFICATION AND COST ESTIMATE BY ESTIMATE SECTIONS WITH ROUTE TOTALS

ITEM	ESTIMATE SECTION MILEPOST							TOTAL FOR ROUTE
	0.00	0.36	0.98	2.54	3.01	3.53	4.02	
1. FINANCE CODE	22	23	20	22	20	20	20	
2. SECTION LENGTH	0.36	0.62	1.56	0.47	0.52	0.49	0.91	4.93
3. CLASS: RURAL (R) OR URBAN AREA I.D. (NAME AND CODE)	U	U	U	U	U	U	U	
	256	256	256	256	256	256	256	
	BALTIMORE	BALTIMORE	BALTIMORE	BALTIMORE	BALTIMORE	BALTIMORE	BALTIMORE	
4. MILEAGE INCREMENT: CODE(1,2, OR 3)	1	1	1	1	1	3	3	
5. ROUTE SIGNIFICANCE: CODE (N OR L)	L	L	L	L	L	L	L	
8. DESIGN SPEED (V)	60	70	70	70	70	70	70	
7. BASE YEAR TRAFFIC (1982 ADT)	20,200	37,000	37,000	37,000	37,000	37,000	37,000	
8. TRAFFIC A. DESIGN YEAR	2006	2006	2006	2006	2006	2006	2006	
B. ADT DESIGN YEAR	46,000	54,500	43,000	43,000	43,000	44,200	44,200	
C. DHV DESIGN YEAR	3,928	4,711	3,717	3,870	3,870	4,000	4,000	
D. DIRECTION DISTRIBUTION FACTOR	66	67	67	63	63	63	63	
E. T% TRUCKS DESIGN YEAR DHV	04	04	04	04	04	04	04	
F. T% TRUCKS DESIGN YEAR ADT	06	06	06	06	06	06	06	
9. NUMBER LANES TO BE CONSTRUCTED THIS ESTIMATE	00	04	04	04	04	00	00	
10. ULTIMATE NUMBER THROUGH TRAFFIC LANES	04	04	04	04	04	04	04	
11. TYPICAL CROSS-SECTION REFERENCE	402	376	387	334	407	376	376	
12. RIGHT-OF-WAY WIDTH: PREVAILING	200	200	250	300	400	400	400	
13. MEDIAN WIDTH: PREVAILING	12	54	54	40	54	70	70	
14. STATUS OF DEVELOPMENT DEC. 31, 1983 (PR-511)	1B1F	2A2F	3A2	3A2	3A2	1B1F	1B1F	
WORK CLASSIFICATION	ESTIMATED COSTS (1,000 DOLLARS)							
1. PRELIMINARY ENGINEERING	0	0	0	0	0	0	0	
2. R.O.W. A. ACQUISITION	0	1,563	0	1,068	0	0	0	2,631
B. RELOCATION	0	0	0	0	0	0	0	
3. UTILITY ADJUSTMENTS	0	431	0	31	0	0	0	462
4. EROSION CONTROL, CLEAR, GRUB, GRADE, DRAIN, & MINOR STRUCTURES	0	1,174	0	1,074	0	0	0	2,248
5. SUBBASE,BASE, SURFACING, & SHOULDERS	0	1,513	0	801	0	0	0	2,314
6. R.R. GRADE SEPARATIONS	0	0	0	0	0	0	0	
7. HIGHWAY GRADE SEPARATIONS WITHOUT RAMPS	0	0	0	4,653	0	0	0	4,653
8. INTERCHANGES	0	9,561	0	0	0	0	0	9,561
9. OTHER BRIDGES, TUNNELS, AND WALLS	0	0	0	0	0	0	0	
10. TRAFFIC CONTROL DEVICES	0	61	0	302	0	0	0	363
11. WEIGH STATIONS, PEDESTRIAN AND BICYCLE FACILITIES	0	0	0	0	0	0	0	
12. SAFETY WORK ON COMPLETED SECTIONS	0	0	0	0	0	0	0	
13. NOISE ABATEMENT MEASURES	0	0	0	0	0	0	0	
14. ROADSIDE IMPROVEMENT A. LANDSCAPE PLANTING	0	0	0	0	0	0	0	
B. REST AREAS & OVERLOOKS	0	0	0	0	0	0	0	
15. ALL OTHER ITEMS: MAINT. OF TRAF., TRAINING, MOBIL, ETC.	179	241	0	421	0	0	0	841
16. SUBTOTAL, LINES 4 THRU 15	179	12,551	0	7,251	0	0	0	19,981
17. CONSTRUCTION ENGINEERING & CONTINGENCIES, 15% of LINE 18	27	1,883	0	1,088	0	0	0	2,998
18. TOTAL COST OF CONSTRUCTION, LINES 18 & 17	206	14,434	0	8,339	0	0	0	22,979
19. TOTAL ESTIMATE COST, LINES 1, 2, 3, & 18	206	16,428	0	9,438	0	0	0	26,072

** ROUNDED TO ZERO

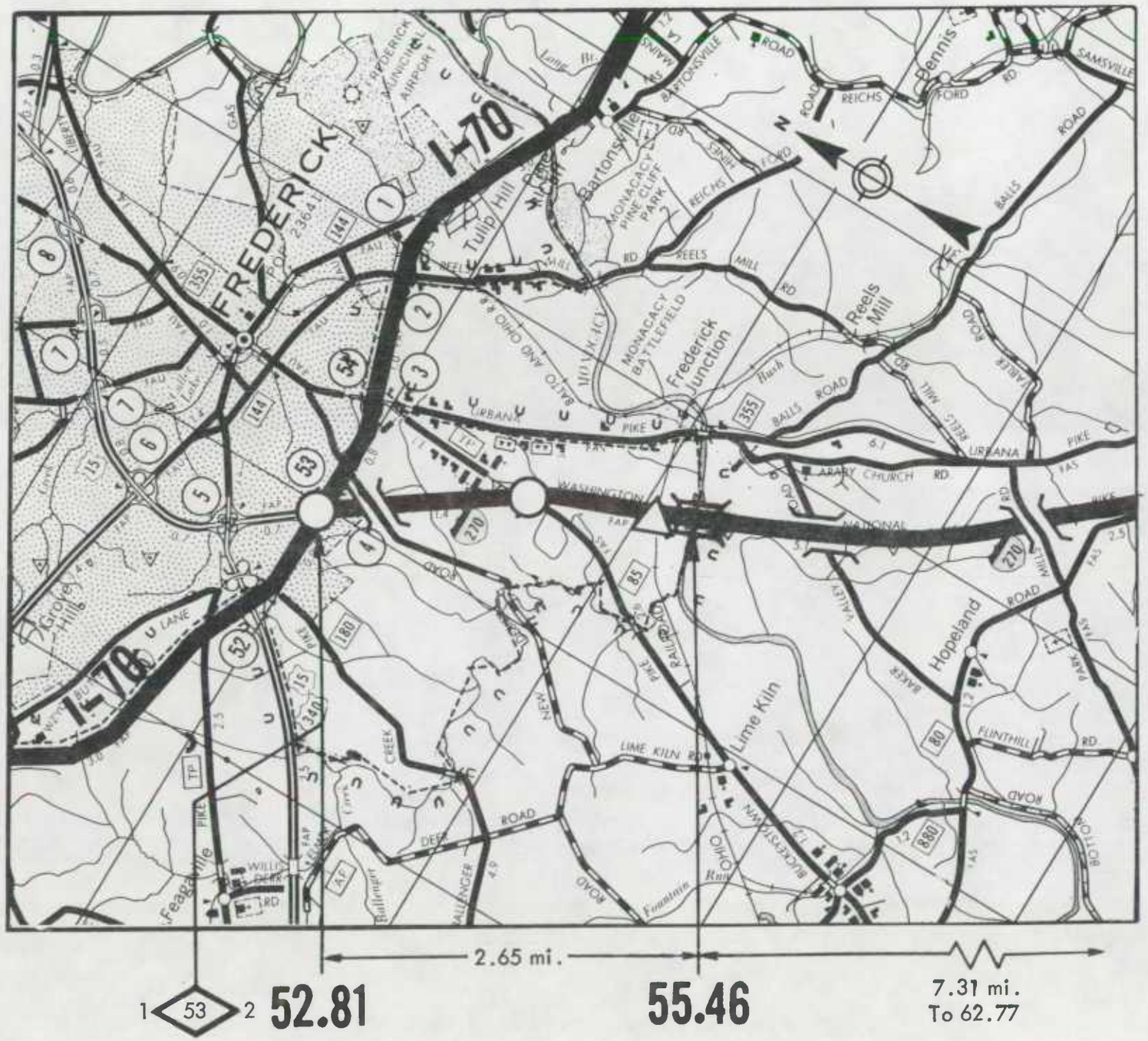

LEGEND

- Interstate Location Status 4 thru 1
- Interstate Location Status 5a(2) or 5a(3
- Segments Approved Under Section 139 Title 23, USC, (non-chargeable).
- Interchange
- Highway Grade Separation -No Connection
- Railroad Grade Separation
- Combination Highway-Railroad Grade Separation
- Other Bridge
- Tunnel
- TOLL — Toll Bridge, Tunnel, Highway or Combination
- Frontage Road
- Terminated Cross Road
- Intersection At-Grade
- U U — Urban Area Boundary
- Safety Rest Area
- 13 — Post Mileage
- 1 2 — Route Sections
- 2.8 — Estimate Section Number

MARYLAND

INTERSTATE ROUTE 270

SHEET 1 OF 5

DATE: DECEMBER 31, 1987

SCALE IN MILES

0 1 2

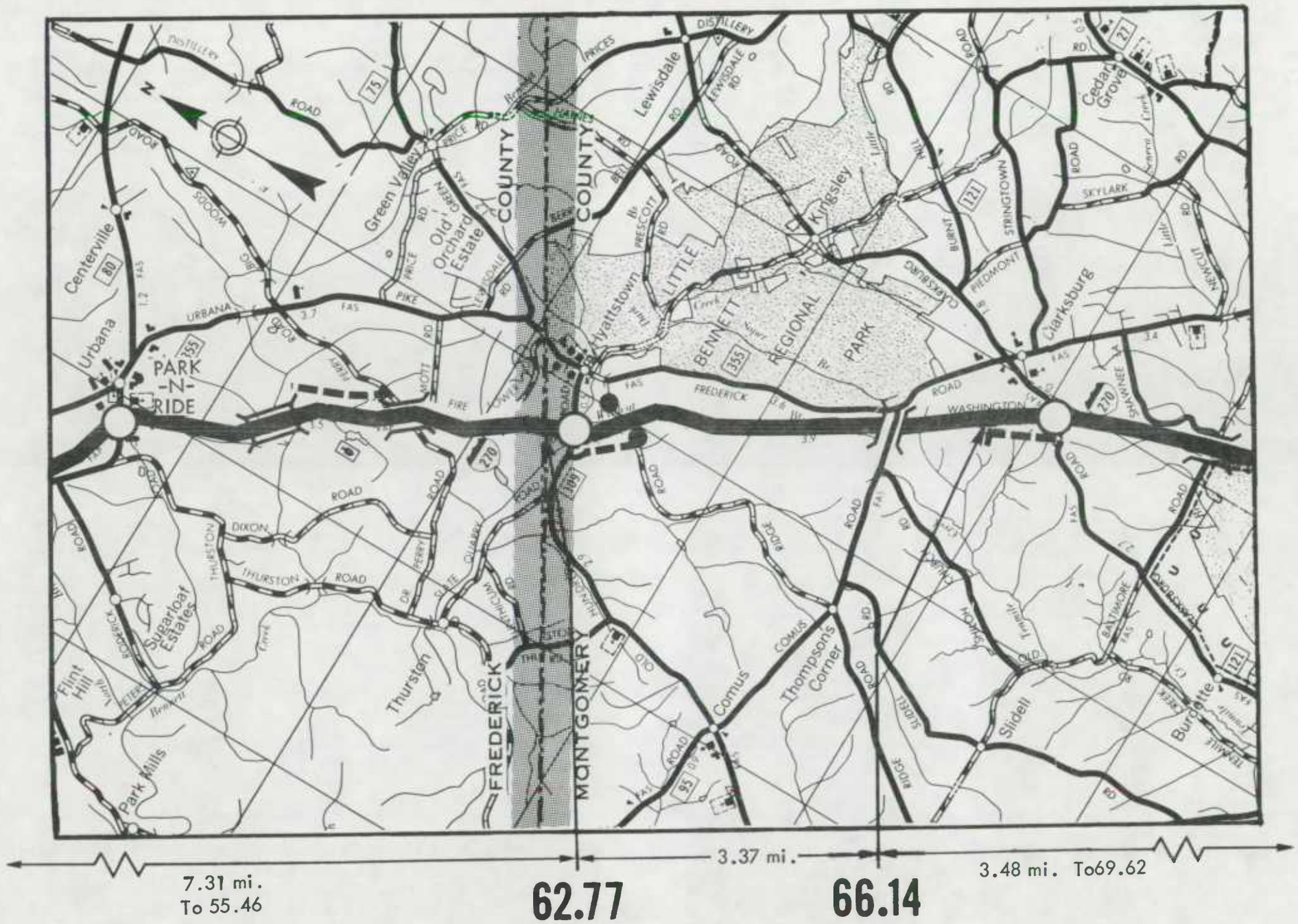

INTERSTATE ROUTE 270

SHEET 2 OF 5

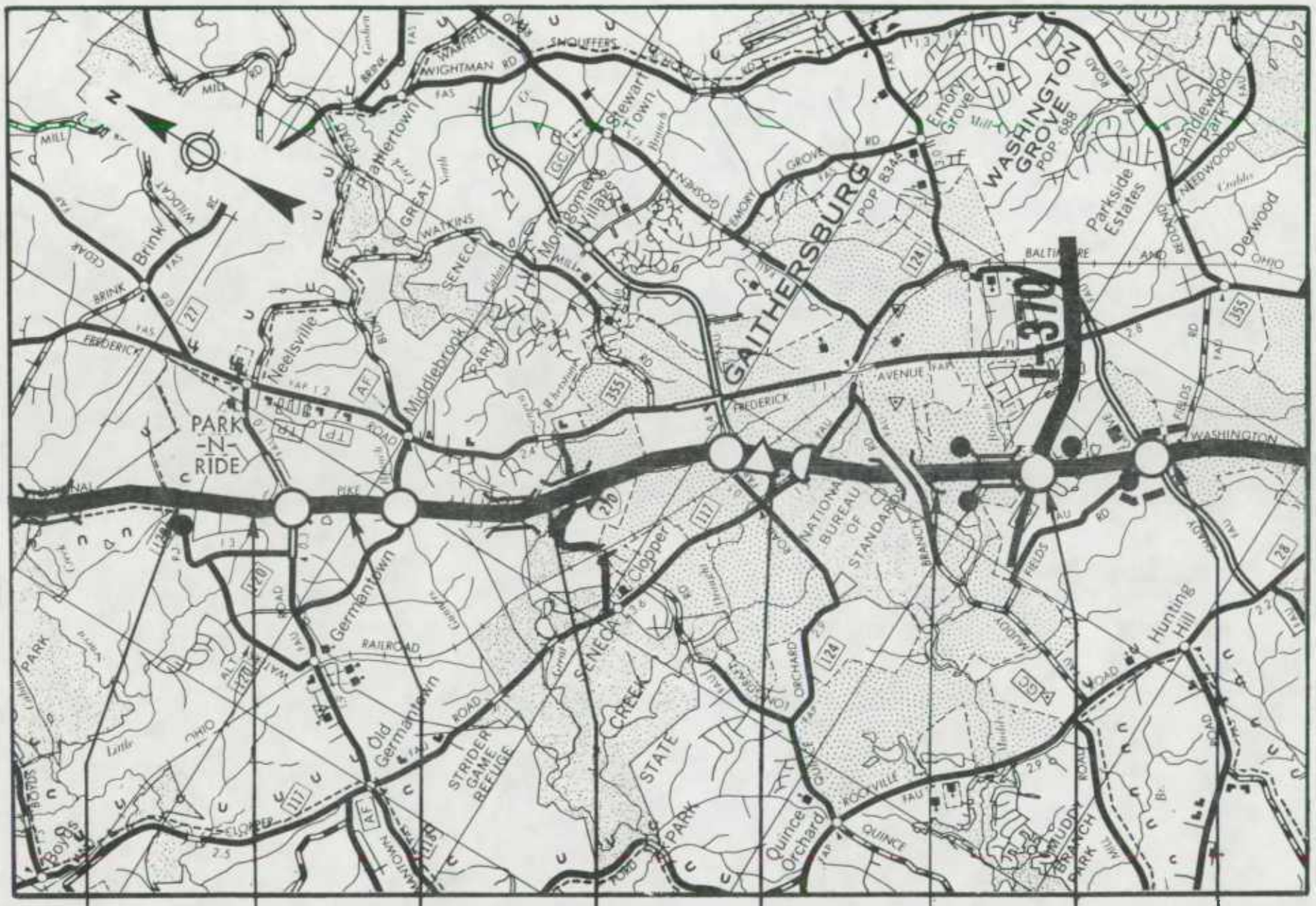

INTERSTATE ROUTE 270

SHEET 3 OF 5

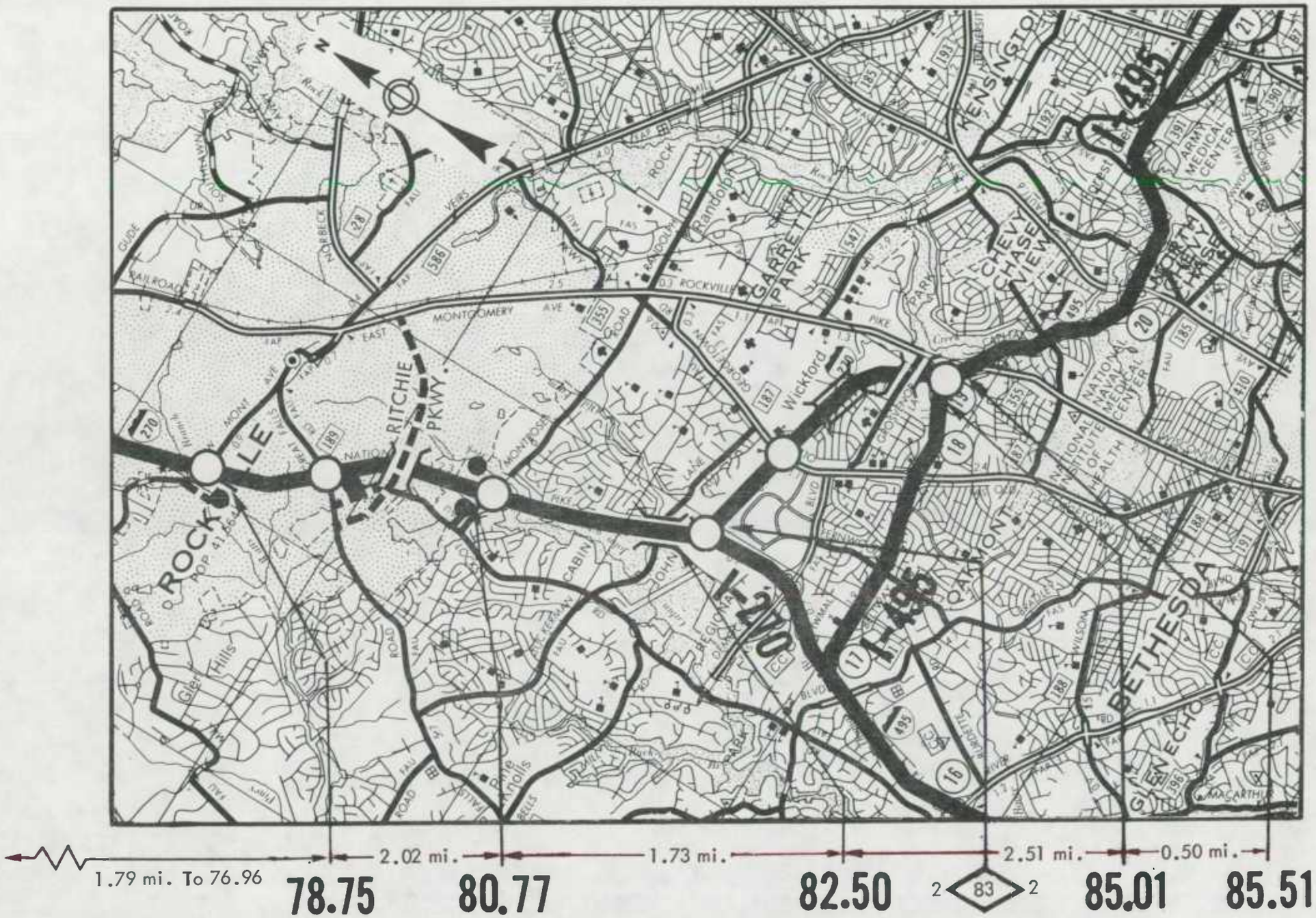

INTERSTATE ROUTE 270

SHEET 4 OF 5

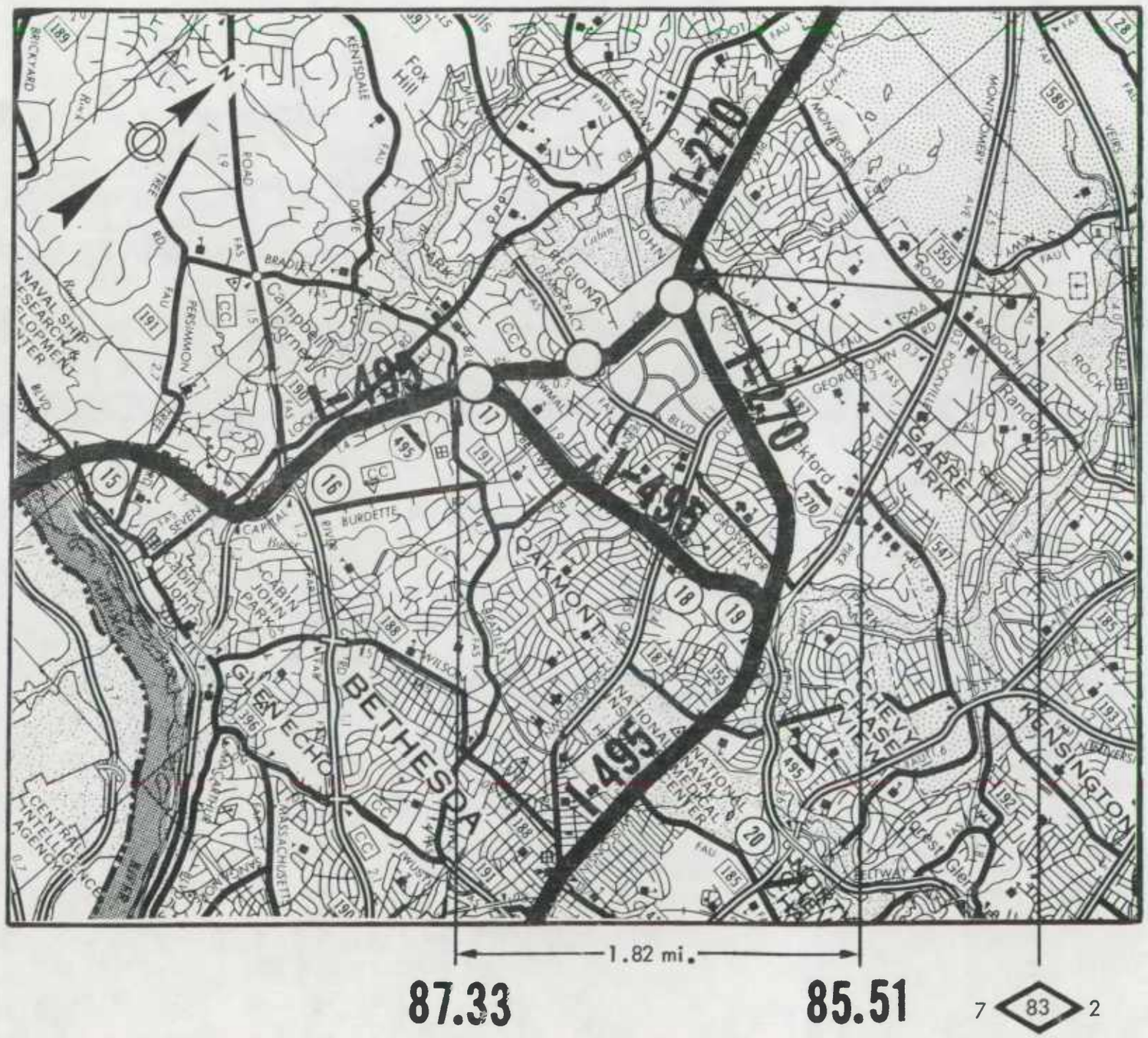

LEGEND

- Interstate Location Status 4 thru 1
- Interstate Location Status 5a(2) or 5a(3)
- Segments Approved Under Section 139 Title 23, USC, (non-chargeable).
- Interchange
- Highway Grade Separation -Na Connection
- Railroad Grade Separation
- Combination Highway-Railroad Grade Separation
- Other Bridge
- Tunnel
- TOLL — Toll Bridge, Tunnel, Highway or Combination
- Frontage Road
- Terminated Crass Road
- Intersection At-Grade
- U U — Urban Area Boundary
- Safety Rest Area
- 13 — Post Mileage
- 1 2 — Route Sections
- 2.8 — Estimate Section Number

MARYLAND

INTERSTATE ROUTE 270

SHEET 5 OF 5

DATE: DECEMBER 31, 1987

SCALE IN MILES

0 1 2

STATE: MARYLAND CODE: 24

ROUTE: 270

TABLE B - DESIGN CLASSIFICATION AND COST ESTIMATE BY ESTIMATE SECTIONS WITH ROUTE TOTALS

ITEM	ESTIMATE SECTION MILEPOST							TOTAL FOR ROUTE
	52.81	55.46	62.77	66.14	69.62	70.21	71.04	
1. FINANCE CODE	20	20	20	25	25	20	25	
2. SECTION LENGTH	2.65	7.31	3.37	3.48	0.59	0.83	1.34	
3. CLASS: RURAL (R) OR URBAN AREA I.D. (NAME AND CODE)	U	R	R	R	U	U	U	
	257				796	796	796	
	FREDERICK				WASHINGTON	WASHINGTON	WASHINGTON	
4. MILEAGE INCREMENT: CODE(1,2, OR 3)	1	1	1	1	1	1	1	
5. ROUTE SIGNIFICANCE: CODE (N OR L)	N	N	N	N	N	N	N	
6. DESIGN SPEED (V)	60	60	60	60	60	60	60	
7. BASE YEAR TRAFFIC (1982 ADT)	50,400	50,400	47,500	50,200	50,200	75,000	75,000	
8. TRAFFIC A. DESIGN YEAR	1975	1975	1975	2010	2010	2006	2010	
B. ADT DESIGN YEAR	25,600	25,600	25,600	80,000	80,000	89,500	89,500	
C. DHV DESIGN YEAR	3,072	3,072	3,072	6,550	6,550	7,610	7,610	
D. DIRECTION DISTRIBUTION FACTOR	60	60	60	60	60	60	60	
E. T% TRUCKS DESIGN YEAR DHV	03	03	03	03	03	03	03	
F. T% TRUCKS DESIGN YEAR ADT	07	07	07	07	07	07	07	
9. NUMBER LANES TO BE CONSTRUCTED THIS ESTIMATE	00	00	00	02	02	00	02	
10. ULTIMATE NUMBER THROUGH TRAFFIC LANES	04	04	04	06	06	06	08	
11. TYPICAL CROSS-SECTION REFERENCE	301	301	301	324	324	324	360	
12. RIGHT-OF-WAY WIDTH: PREVAILING	200	200	200	300	300	300	300	
13. MEDIAN WIDTH: PREVAILING	50	50	50	50	50	26	26	
14. STATUS OF DEVELOPMENT DEC. 31, 1983 (PR-511)	1A1F	1A1F	1A1F	2A2F	2A2F	1A1F	2A2F	
WORK CLASSIFICATION					ESTIMATED COSTS (1,000 DOLLARS)			
1. PRELIMINARY ENGINEERING	0	0	0	0	0	0	0	
2. R.O.W. A. ACQUISITION	0	0	0	0	0	0	2,944	
B. RELOCATION	0	0	0	0	0	0	0	
3. UTILITY ADJUSTMENTS	0	0	0	0	0	0	632	
4. EROSION CONTROL, CLEAR, GRUB, GRADE, DRAIN, & MINOR STRUCTURES	0	0	0	2,232	394	0	941	
5. SUBBASE,BASE, SURFACING, & SHOULDERS	0	0	0	7,536	1,330	0	1,020	
6. R.R. GRADE SEPARATIONS	0	0	0	0	0	0	0	
7. HIGHWAY GRADE SEPARATIONS WITHOUT RAMPS	0	0	0	0	0	0	0	
8. INTERCHANGES	0	0	0	0	0	0	1,483	
9. OTHER BRIDGES, TUNNELS, AND WALLS	0	0	0	0	0	0	1,284	
10. TRAFFIC CONTROL DEVICES	0	0	0	999	176	0	180	
11. WEIGH STATIONS, PEDESTRIAN AND BICYCLE FACILITIES	0	0	0	0	0	0	0	
12. SAFETY WORK ON COMPLETED SECTIONS	0	0	0	0	0	0	0	
13. NOISE ABATEMENT MEASURES	0	0	0	0	0	0	0	
14. ROADSIDE IMPROVEMENT A. LANDSCAPE PLANTING	0	0	0	0	0	0	0	
B. REST AREAS & OVERLOOKS	0	0	0	0	0	0	0	
15. ALL OTHER ITEMS: MAINT. OF TRAF., TRAINING, MOBIL, ETC.	0	0	0	680	120	0	1,099	
16. SUBTOTAL, LINES 4 THRU 15	0	0	0	11,446	2,020	0	6,007	
17. CONSTRUCTION ENGINEERING & CONTINGENCIES, 15% of LINE 16	0	0	0	1,717	303	0	901	
18. TOTAL COST OF CONSTRUCTION, LINES 16 & 17	0	0	0	13,163	2,323	0	6,908	
19. TOTAL ESTIMATE COST, LINES 1, 2, 3, & 18	0	0	0	13,163	2,323	0	10,484	

** ROUNDED TO ZERO

STATE: MARYLAND CODE: 24

ROUTE: 270

TABLE B - DESIGN CLASSIFICATION AND COST ESTIMATE BY ESTIMATE SECTIONS WITH ROUTE TOTALS

ITEM	ESTIMATE SECTION MILEPOST							TOTAL FOR ROUTE
	72.38	73.99	75.12	75.85	76.96	78.75	80.77	
1. FINANCE CODE	25	25	25	25	25	25	25	
2. SECTION LENGTH	1.61	1.13	0.73	1.11	1.79	2.02	1.73	
3. CLASS: RURAL (R) OR URBAN AREA I.D. (NAME AND CODE)	U	U	U	U	U	U	U	
	796	796	796	796	796	796	796	
	WASHINGTON	WASHINGTON	WASHINGTON	WASHINGTON	WASHINGTON	WASHINGTON	WASHINGTON	
4. MILEAGE INCREMENT: CODE(1,2, OR 3)	1	1	1	1	1	1	1	
5. ROUTE SIGNIFICANCE: CODE (N OR L)	N	N	N	N	N	N	N	
6. DESIGN SPEED (V)	60	60	60	60	60	60	60	
7. BASE YEAR TRAFFIC (1982 ADT)	75,000	75,000	75,000	75,000	110,000	125,000	145,000	
8. TRAFFIC A. DESIGN YEAR	2010	2010	2006	2006	2006	2006	2006	
B. ADT DESIGN YEAR	89,500	89,500	89,500	89,500	128,000	124,000	148,300	
C. DHV DESIGN YEAR	7,610	7,610	7,610	7,610	10,880	10,570	12,610	
D. DIRECTION DISTRIBUTION FACTOR	60	60	60	60	55	55	55	
E. T% TRUCKS DESIGN YEAR DHV	03	03	03	03	03	03	03	
F. T% TRUCKS DESIGN YEAR ADT	07	07	07	07	07	07	07	
9. NUMBER LANES TO BE CONSTRUCTED THIS ESTIMATE	02	02	00	00	02	02	02	
10. ULTIMATE NUMBER THROUGH TRAFFIC LANES	08	08	08	08	08	08	08	
11. TYPICAL CROSS-SECTION REFERENCE	360	360	360	360	360	360	401	
12. RIGHT-OF-WAY WIDTH: PREVAILING	300	300	300	300	300	300	300	
13. MEDIAN WIDTH: PREVAILING	26	26	26	26	26	26	26	
14. STATUS OF DEVELOPMENT DEC. 31, 1983 (PR-511)	2A2F	2A2F	2A1F	2A1F	2A1F	2A3F	2A3F	
WORK CLASSIFICATION	ESTIMATED COSTS (1,000 DOLLARS)							
1. PRELIMINARY ENGINEERING	0	0	0	0	0	0	0	
2. R.O.W. A. ACQUISITION	3,598	213	138	209	337	503	3,902	
B. RELOCATION	0	0	0	0	0	0	0	
3. UTILITY ADJUSTMENTS	535	0	0	0	0	0	184	
4. EROSION CONTROL, CLEAR, GRUB, GRADE, DRAIN, & MINOR STRUCTURES	1,207	0	0	0	0	0	0	
5. SUBBASE,BASE, SURFACING, & SHOULDERS	2,790	0	0	0	0	0	0	
6. R.R. GRADE SEPARATIONS	0	0	0	0	0	0	0	
7. HIGHWAY GRADE SEPARATIONS WITHOUT RAMPS	0	0	0	0	0	2,301	0	
8. INTERCHANGES	397	0	0	0	0	0	7,969	
9. OTHER BRIDGES, TUNNELS, AND WALLS	1,073	0	0	0	0	0	0	
10. TRAFFIC CONTROL DEVICES	1,629	0	0	0	0	0	0	
11. WEIGH STATIONS, PEDESTRIAN AND BICYCLE FACILITIES	0	0	0	0	0	0	0	
12. SAFETY WORK ON COMPLETED SECTIONS	0	0	0	0	0	0	0	
13. NOISE ABATEMENT MEASURES	0	0	0	0	0	0	0	
14. ROADSIDE IMPROVEMENT A. LANDSCAPE PLANTING	0	0	0	0	0	0	0	
B. REST AREAS & OVERLOOKS	0	0	0	0	0	0	0	
15. ALL OTHER ITEMS: MAINT. OF TRAF., TRAINING, MOBIL, ETC.	1,366	0	104	0	0	69	0	
16. SUBTOTAL, LINES 4 THRU 15	8,460	0	104	0	0	2,370	7,969	
17. CONSTRUCTION ENGINEERING & CONTINGENCIES, 15% of LINE 16	1,270	0	16	0	0	355	1,196	
18. TOTAL COST OF CONSTRUCTION, LINES 16 & 17	9,731	0	119	0	0	2,725	9,166	
19. TOTAL ESTIMATE COST, LINES 1, 2, 3, & 18	13,864	213	257	209	337	3,228	13,252	

** ROUNDED TO ZERO

STATE: MARYLAND CODE: 24

ROUTE: 270

TABLE B - DESIGN CLASSIFICATION AND COST ESTIMATE BY ESTIMATE SECTIONS WITH ROUTE TOTALS

ITEM	ESTIMATE SECTION MILEPOST							TOTAL FOR ROUTE
	82.50	85.01	85.51					
1. FINANCE CODE	25	20	20					
2. SECTION LENGTH	2.51	0.50	1.82					34.52
3. CLASS: RURAL (R) OR URBAN AREA I.D. (NAME AND CODE)	U	U	U					
	796	796	796					
	WASHINGTON	WASHINGTON	WASHINGTON					
4. MILEAGE INCREMENT: CODE(1,2, OR 3)	1	1	1					
5. ROUTE SIGNIFICANCE: CODE (N OR L)	N	N	N					
6. DESIGN SPEED (V)	60	60	60					
7. BASE YEAR TRAFFIC (1982 ADT)	70,000	70,000	75,000					
8. TRAFFIC A. DESIGN YEAR	2010	1993	1993					
B. ADT DESIGN YEAR	73,500	73,500	84,800					
C. DHV DESIGN YEAR	6,260	6,260	7,200					
D. DIRECTION DISTRIBUTION FACTOR	55	55	55					
E. T% TRUCKS DESIGN YEAR DHV	03	03	03					
F. T% TRUCKS DESIGN YEAR ADT	07	07	07					
9. NUMBER LANES TO BE CONSTRUCTED THIS ESTIMATE	02	00	00					
10. ULTIMATE NUMBER THROUGH TRAFFIC LANES	06	06	06					
11. TYPICAL CROSS-SECTION REFERENCE	324	324	307					
12. RIGHT-OF-WAY WIDTH: PREVAILING	300	300	300					
13. MEDIAN WIDTH: PREVAILING	26	26	60					
14. STATUS OF DEVELOPMENT DEC. 31, 1983 (PR-511)	2A2F	1A1F	1A1F					
WORK CLASSIFICATION	ESTIMATED COSTS (1,000 DOLLARS)							
1. PRELIMINARY ENGINEERING	0	0	0					
2. R.O.W. A. ACQUISITION	0	0	0					11,844
B. RELOCATION	0	0	0					
3. UTILITY ADJUSTMENTS	0	0	0					1,351
4. EROSION CONTROL, CLEAR, GRUB, GRADE, DRAIN, & MINOR STRUCTURES	823	0	0					5,597
5. SUBBASE,BASE, SURFACING, & SHOULDERS	3,534	0	0					16,210
6. R.R. GRADE SEPARATIONS	0	0	0					
7. HIGHWAY GRADE SEPARATIONS WITHOUT RAMPS	478	0	0					2,779
8. INTERCHANGES	0	0	0					9,849
9. OTHER BRIDGES, TUNNELS, AND WALLS	0	0	0					2,357
10. TRAFFIC CONTROL DEVICES	0	0	0					2,984
11. WEIGH STATIONS, PEDESTRIAN AND BICYCLE FACILITIES	0	0	0					
12. SAFETY WORK ON COMPLETED SECTIONS	0	0	0					
13. NOISE ABATEMENT MEASURES	0	0	0					
14. ROADSIDE IMPROVEMENT A. LANDSCAPE PLANTING	0	0	0					
B. REST AREAS & OVERLOOKS	0	0	0					
15. ALL OTHER ITEMS: MAINT. OF TRAF., TRAINING, MOBIL, ETC.	1,623	0	0					5,061
16. SUBTOTAL, LINES 4 THRU 15	6,458	0	0					44,834
17. CONSTRUCTION ENGINEERING & CONTINGENCIES, 15% of LINE 16	970	0	0					6,728
18. TOTAL COST OF CONSTRUCTION, LINES 16 & 17	7,427	0	0					51,562
19. TOTAL ESTIMATE COST, LINES 1, 2, 3, & 18	7,427	0	0					64,757

** ROUNDED TO ZERO

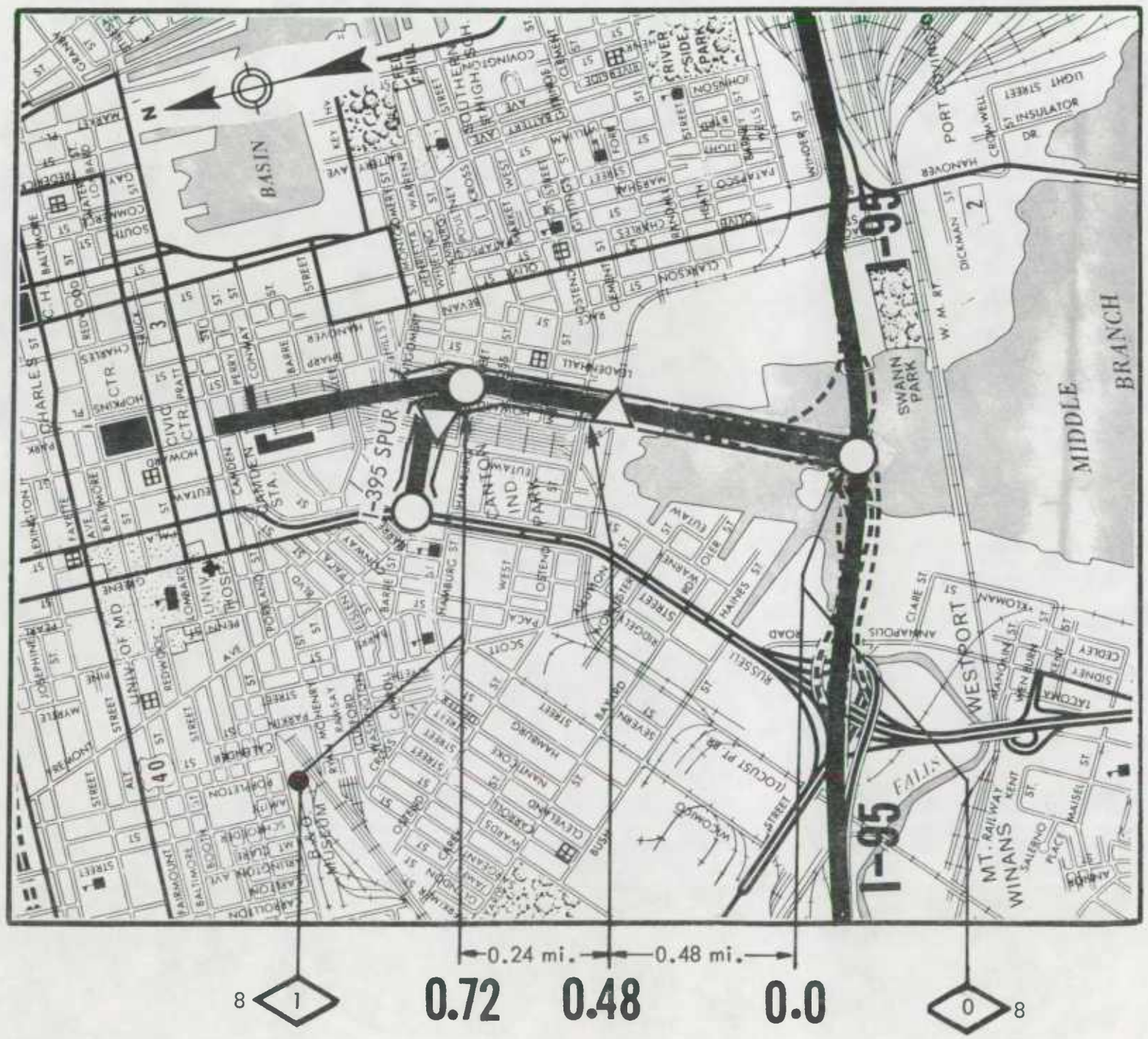

LEGEND

- Interstate Location Status 4 thru 1
- Interstate Location Status 5a(2) or 5a(3)
- Segments Approved Under Section 139 Title 23, USC, (non-chargeable).
- Interchange
- Highway Grade Separation -No Connection
- Railroad Grade Separation
- Combination Highway-Railroad Grade Separation
- Other Bridge
- Tunnel
- TOLL — Tall Bridge, Tunnel, Highway or Combination
- Frontage Road
- Terminated Cross Road
- Intersection At-Grade
- Urban Area Boundary
- Safety Rest Area
- 13 — Post Mileage
- 1 2 — Route Sections
- 2.8 — Estimate Section Number

BALTIMORE CITY

INTERSTATE ROUTE 395

SHEET 1 OF 1

DATE: DECEMBER 31, 1987

SCALE: 1 INCH = 1500 FT.

STATE: MARYLAND CODE: 24

ROUTE: 395

TABLE B - DESIGN CLASSIFICATION AND COST ESTIMATE BY ESTIMATE SECTIONS WITH ROUTE TOTALS

ITEM	ESTIMATE SECTION MILEPOST							TOTAL FOR ROUTE
	0.00	0.48						
1. FINANCE CODE	20	21						
2. SECTION LENGTH	0.48	0.24						.72
3. CLASS: RURAL (R) OR URBAN AREA I.D. (NAME AND CODE)	U	U						
	256	256						
	BALTIMORE	BALTIMORE						
4. MILEAGE INCREMENT: CODE(1,2, OR 3)	1	1						
5. ROUTE SIGNIFICANCE: CODE (N OR L)	L	L						
6. DESIGN SPEED (V)	60	60						
7. BASE YEAR TRAFFIC (1982 ADT)	55,000	55,000						
8. TRAFFIC A. DESIGN YEAR	1998	1998						
B. ADT DESIGN YEAR	57,847	57,847						
C. DHV DESIGN YEAR	6,942	6,942						
D. DIRECTION DISTRIBUTION FACTOR	60	60						
E. T% TRUCKS DESIGN YEAR DHV	03	03						
F. T% TRUCKS DESIGN YEAR ADT	07	07						
9. NUMBER LANES TO BE CONSTRUCTED THIS ESTIMATE	00	00						
10. ULTIMATE NUMBER THROUGH TRAFFIC LANES	06	06						
11. TYPICAL CROSS-SECTION REFERENCE	350	350						
12. RIGHT-OF-WAY WIDTH: PREVAILING	300	300						
13. MEDIAN WIDTH: PREVAILING	34	34						
14. STATUS OF DEVELOPMENT DEC. 31, 1983 (PR-511)	1A1F	1A3F						
WORK CLASSIFICATION	ESTIMATED COSTS (1,000 DOLLARS)							
1. PRELIMINARY ENGINEERING	0	0						
2. R.O.W. A. ACQUISITION	0	0						
B. RELOCATION	0	0						
3. UTILITY ADJUSTMENTS	0	0						
4. EROSION CONTROL, CLEAR, GRUB, GRADE, DRAIN, & MINOR STRUCTURES	0	0						
5. SUBBASE,BASE, SURFACING, & SHOULDERS	0	0						
6. R.R. GRADE SEPARATIONS	0	0						
7. HIGHWAY GRADE SEPARATIONS WITHOUT RAMPS	0	0						
8. INTERCHANGES	0	0						
9. OTHER BRIDGES, TUNNELS, AND WALLS	0	0						
10. TRAFFIC CONTROL DEVICES	0	0						
11. WEIGH STATIONS, PEDESTRIAN AND BICYCLE FACILITIES	0	0						
12. SAFETY WORK ON COMPLETED SECTIONS	0	0						
13. NOISE ABATEMENT MEASURES	0	455						455
14. ROADSIDE IMPROVEMENT A. LANDSCAPE PLANTING	0	0						
B. REST AREAS & OVERLOOKS	0	0						
15. ALL OTHER ITEMS: MAINT. OF TRAF., TRAINING, MOBIL, ETC.	0	0						
16. SUBTOTAL, LINES 4 THRU 15	0	455						455
17. CONSTRUCTION ENGINEERING & CONTINGENCIES, 15% of LINE 16	0	68						68
18. TOTAL COST OF CONSTRUCTION, LINES 16 & 17	0	523						523
19. TOTAL ESTIMATE COST, LINES 1, 2, 3, & 18	0	523						523

** ROUNDED TO ZERO

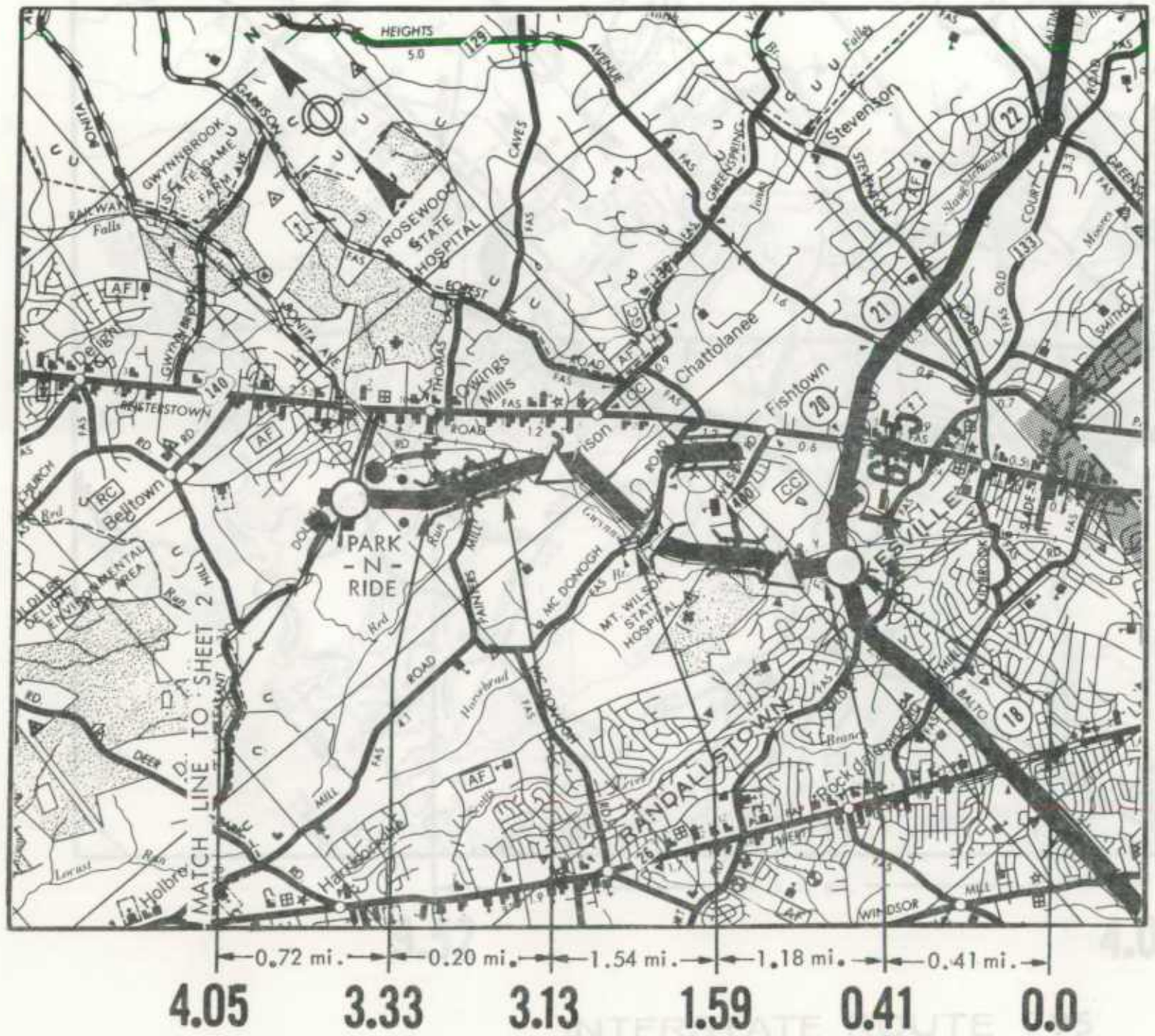

LEGEND

- Interstate Location Status 4 thru 1
- Interstate Location Status 5a(2) or 5a(3)
- Segments Approved Under Section 139 Title 23, USC, (non-chargeable).
- Interchange
- Highway Grade Separation -No Connection
- Railroad Grade Separation
- Combination Highway-Railroad Grade Separation
- Other Bridge
- Tunnel
- TOLL — Toll Bridge, Tunnel, Highway or Combination
- Frontage Road
- Terminated Cross Road
- Intersection At-Grade
- U U — Urban Area Boundary
- Safety Rest Area
- 13 — Post Mileage
- 1 2 — Route Sections
- 2.8 — Estimate Section Number

MARYLAND

INTERSTATE ROUTE 795

SHEET 1 OF 2

DATE DECEMBER 31, 1987

SCALE IN MILES

0 1 2

STATE: MARYLAND CODE: 24

ROUTE: 795

TABLE B - DESIGN CLASSIFICATION AND COST ESTIMATE BY ESTIMATE SECTIONS WITH ROUTE TOTALS

ITEM	ESTIMATE SECTION MILEPOST							TOTAL FOR ROUTE
	0.00	0.41	1.59	3.13	3.33	4.05		
1. FINANCE CODE	20	22	22	20	22	20		
2. SECTION LENGTH	0.41	1.18	1.54	0.20	0.72	5.47		9.52
3. CLASS: RURAL (R) OR URBAN AREA I.D. (NAME AND CODE)	U	U	U	U	U	U		
	256	256	256	256	256	256		
	BALTIMORE	BALTIMORE	BALTIMORE	BALTIMORE	BALTIMORE	BALTIMORE		
4. MILEAGE INCREMENT: CODE(1,2, OR 3)	1	1	1	1	1	1		
5. ROUTE SIGNIFICANCE: CODE (N OR L)	L	L	L	L	L	L		
6. DESIGN SPEED (V)	70	70	70	70	70	70		
7. BASE YEAR TRAFFIC (1982 ADT)	51,000	51,000	51,000	51,000	51,000	42,000		
8. TRAFFIC A. DESIGN YEAR	2004	2004	2004	2004	2004	2004		
B. ADT DESIGN YEAR	107,300	107,300	107,300	107,300	107,300	45,400		
C. DHV DESIGN YEAR	6,364	6,364	6,364	6,364	6,364	3,178		
D. DIRECTION DISTRIBUTION FACTOR	58	58	58	58	58	60		
E. T% TRUCKS DESIGN YEAR DHV	06	06	06	06	06	07		
F. T% TRUCKS DESIGN YEAR ADT	11	11	11	11	11	11		
9. NUMBER LANES TO BE CONSTRUCTED THIS ESTIMATE	00	00	00	00	00	00		
10. ULTIMATE NUMBER THROUGH TRAFFIC LANES	06	06	06	06	06	04		
11. TYPICAL CROSS-SECTION REFERENCE	404	404	404	404	404	343		
12. RIGHT-OF-WAY WIDTH: PREVAILING	300	300	300	300	300	300		
13. MEDIAN WIDTH: PREVAILING	64	64	64	64	64	58		
14. STATUS OF DEVELOPMENT DEC. 31, 1983 (PR-511)	1A1F	1A2F	1A2F	1A1F	1A2F	1B1F		
WORK CLASSIFICATION	ESTIMATED COSTS (1,000 DOLLARS)							
1. PRELIMINARY ENGINEERING	0	0	0	0	0	0		
2. R.O.W. A. ACQUISITION	0	0	0	0	8,458	0		8,458
B. RELOCATION	0	0	0	0	0	0		
3. UTILITY ADJUSTMENTS	0	0	0	0	0	0		
4. EROSION CONTROL, CLEAR, GRUB, GRADE, DRAIN, & MINOR STRUCTURES	0	0	0	0	0	0		
5. SUBBASE,BASE, SURFACING, & SHOULDERS	0	0	0	0	0	0		
6. R.R. GRADE SEPARATIONS	0	0	0	0	0	0		
7. HIGHWAY GRADE SEPARATIONS WITHOUT RAMPS	0	0	0	0	0	0		
8. INTERCHANGES	0	0	0	0	0	0		
9. OTHER BRIDGES, TUNNELS, AND WALLS	0	0	0	0	0	0		
10. TRAFFIC CONTROL DEVICES	0	0	0	0	0	0		
11. WEIGH STATIONS , PEDESTRIAN AND BICYCLE FACILITIES	0	0	0	0	0	0		
12. SAFETY WORK ON COMPLETED SECTIONS	0	0	0	0	0	0		
13. NOISE ABATEMENT MEASURES	0	0	0	0	0	0		
14. ROADSIDE IMPROVEMENT A. LANDSCAPE PLANTING	0	0	0	0	0	0		
B. REST AREAS & OVERLOOKS	0	0	0	0	0	0		
15. ALL OTHER ITEMS: MAINT. OF TRAF., TRAINING, MOBIL, ETC.	0	28	13	0	305	0		346
16. SUBTOTAL, LINES 4 THRU 15	0	28	13	0	305	0		346
17. CONSTRUCTION ENGINEERING & CONTINGENCIES, 15% of LINE 16	0	4	2	0	46	0		52
18. TOTAL COST OF CONSTRUCTION, LINES 16 & 17	0	32	15	0	350	0		397
19. TOTAL ESTIMATE COST, LINES 1, 2, 3, & 18	0	32	15	0	8,808	0		8,855

** ROUNDED TO ZERO

THE FOLLOWING ROUTES ARE CONSIDERED TO BE ZERO F.A.I. COST.

COSTS SHOWN ARE CONSTRUCTION AND RIGHT OF WAY PHASE OVERRUNS ONLY.

STRIP MAPS SHOW ONLY THOSE MILEPOSTS WHERE THE OVERRUNS HAVE OCCURED.

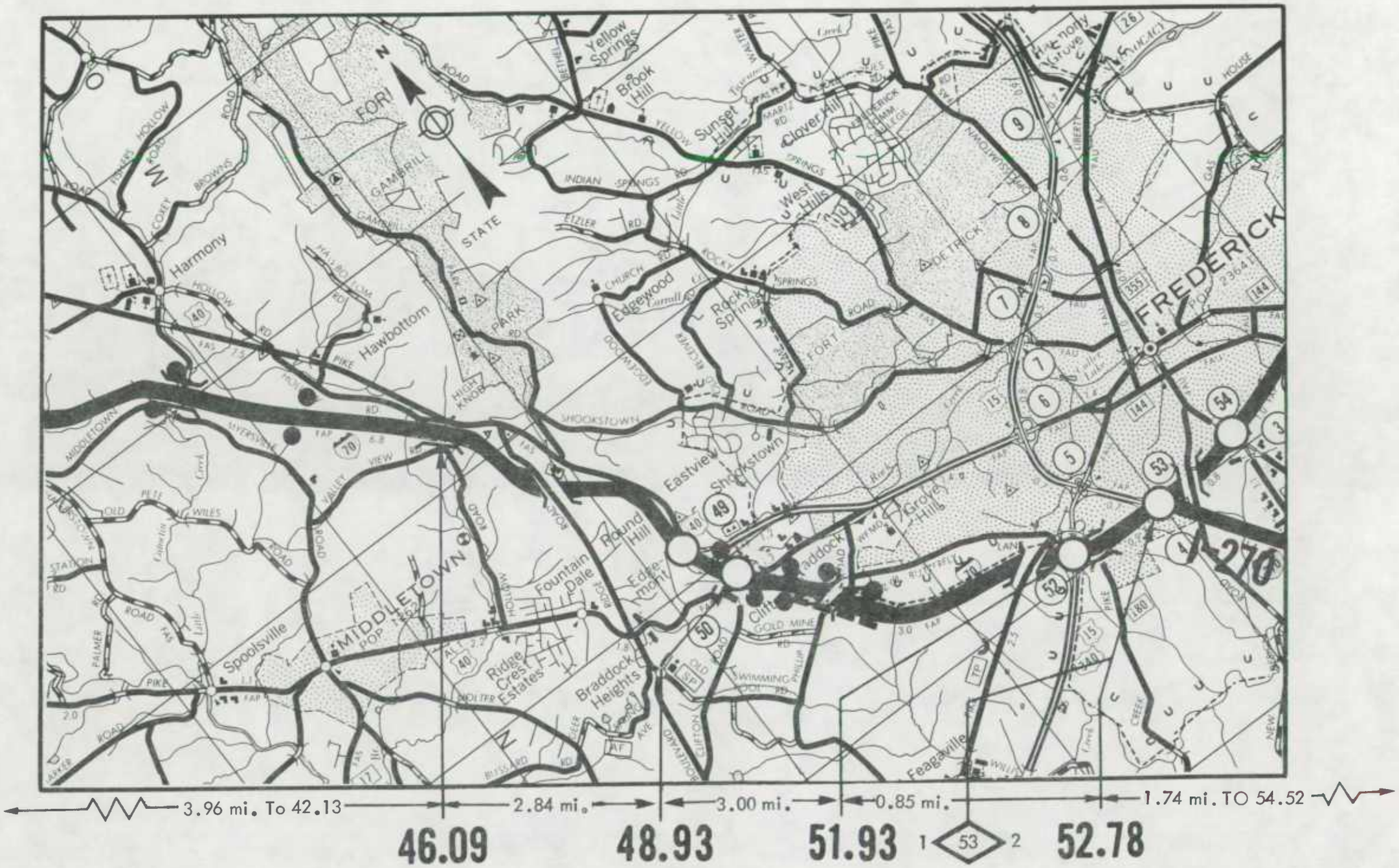

INTERSTATE ROUTE 70

SHEET 5 OF 9

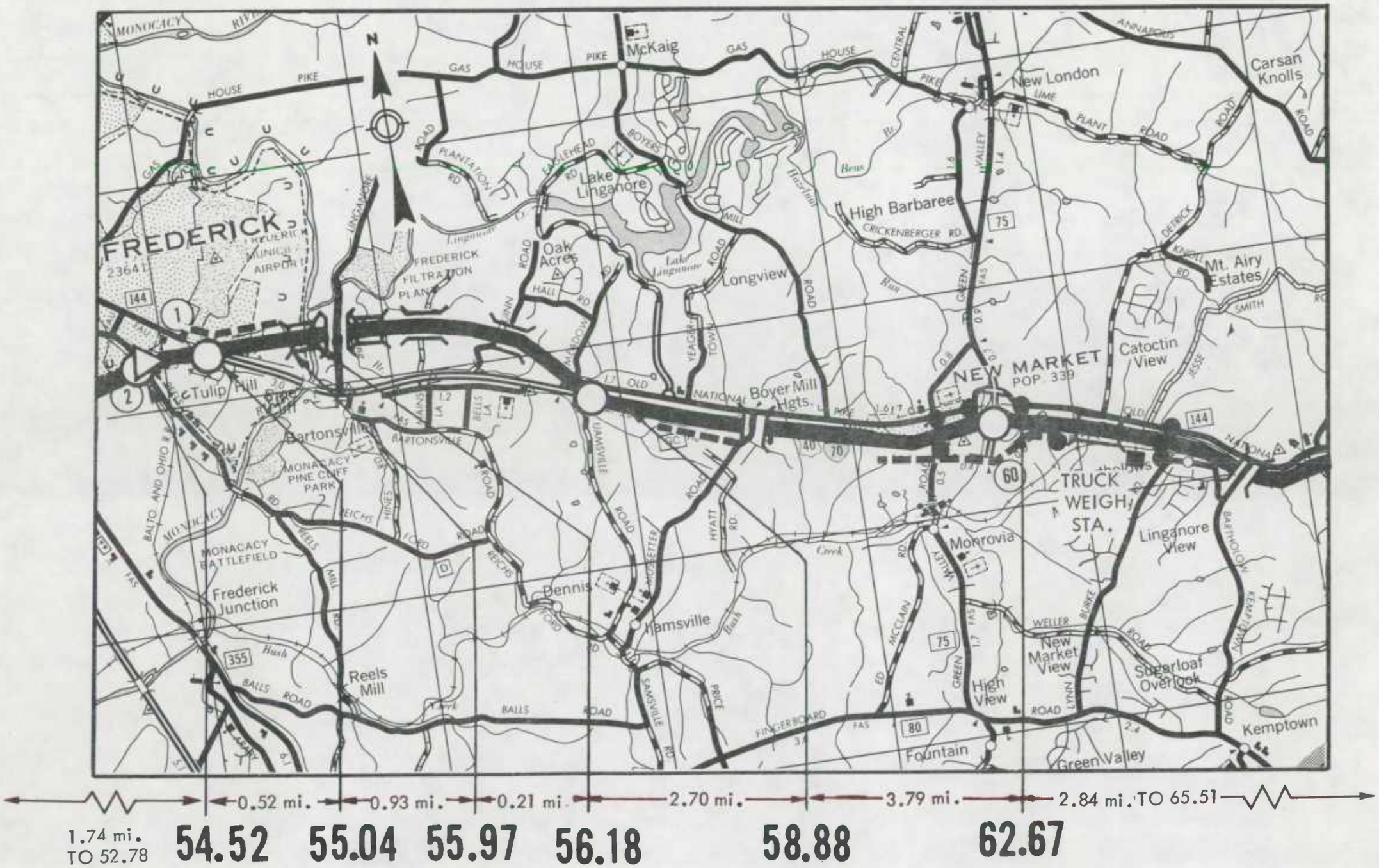

INTERSTATE ROUTE 70

SHEET 6 OF 9

STATE: MARYLAND CODE: 24

ROUTE: 070

TABLE B - DESIGN CLASSIFICATION AND COST ESTIMATE BY ESTIMATE SECTIONS WITH ROUTE TOTALS

ITEM	ESTIMATE SECTION MILEPOST							TOTAL FOR ROUTE
	0.00	52.78	54.52					
1. FINANCE CODE	20	21	20					
2. SECTION LENGTH	52.78	1.74	38.71					93.23
3. CLASS: RURAL (R) OR URBAN AREA I.D. (NAME AND CODE)	R	U	U					
		257	257					
		FREDERICK	FREDERICK					
4. MILEAGE INCREMENT: CODE(1,2, OR 3)	1	1	1					
5. ROUTE SIGNIFICANCE: CODE (N OR L)	N	N	N					
6. DESIGN SPEED (V)	60	60	60					
7. BASE YEAR TRAFFIC (1982 ADT)	12,300	32,550	31,550					
8. TRAFFIC A. DESIGN YEAR	1975	2006	2006					
B. ADT DESIGN YEAR	20,850	69,000	66,500					
C. DHV DESIGN YEAR	2,052	6,460	5,980					
D. DIRECTION DISTRIBUTION FACTOR	58	55	55					
E. T% TRUCKS DESIGN YEAR DHV	07	12	09					
F. T% TRUCKS DESIGN YEAR ADT	09	16	12					
9. NUMBER LANES TO BE CONSTRUCTED THIS ESTIMATE	00	02	02					
10. ULTIMATE NUMBER THROUGH TRAFFIC LANES	04	06	06					
11. TYPICAL CROSS-SECTION REFERENCE	306	397	397					
12. RIGHT-OF-WAY WIDTH: PREVAILING	320	250	250					
13. MEDIAN WIDTH: PREVAILING	38	50	50					
14. STATUS OF DEVELOPMENT DEC. 31, 1983 (PR-511)	1A1F	1A2F	1A1F					
WORK CLASSIFICATION					ESTIMATED COSTS (1,000 DOLLARS)			
1. PRELIMINARY ENGINEERING	0	0	0					
2. R.O.W. A. ACQUISITION	0	0	0					
B. RELOCATION	0	0	0					
3. UTILITY ADJUSTMENTS	0	0	0					
4. EROSION CONTROL, CLEAR, GRUB, GRADE, DRAIN, & MINOR STRUCTURES	0	0	0					
5. SUBBASE,BASE, SURFACING, & SHOULDERS	0	0	0					
6. R.R. GRADE SEPARATIONS	0	0	0					
7. HIGHWAY GRADE SEPARATIONS WITHOUT RAMPS	0	0	0					
8. INTERCHANGES	0	0	0					
9. OTHER BRIDGES, TUNNELS, AND WALLS	0	0	0					
10. TRAFFIC CONTROL DEVICES	0	0	0					
11. WEIGH STATIONS, PEDESTRIAN AND BICYCLE FACILITIES	0	0	0					
12. SAFETY WORK ON COMPLETED SECTIONS	0	0	0					
13. NOISE ABATEMENT MEASURES	0	0	0					
14. ROADSIDE IMPROVEMENT A. LANDSCAPE PLANTING	0	0	0					
B. REST AREAS & OVERLOOKS	0	0	0					
15. ALL OTHER ITEMS: MAINT. OF TRAF., TRAINING, MOBIL, ETC.	0	66	0					66
16. SUBTOTAL, LINES 4 THRU 15	0	66	0					66
17. CONSTRUCTION ENGINEERING & CONTINGENCIES, 15% of LINE 16	0	10	0					10
18. TOTAL COST OF CONSTRUCTION, LINES 16 & 17	0	76	0					76
19. TOTAL ESTIMATE COST, LINES 1, 2, 3, & 18	0	76	0					76

** ROUNDED TO ZERO

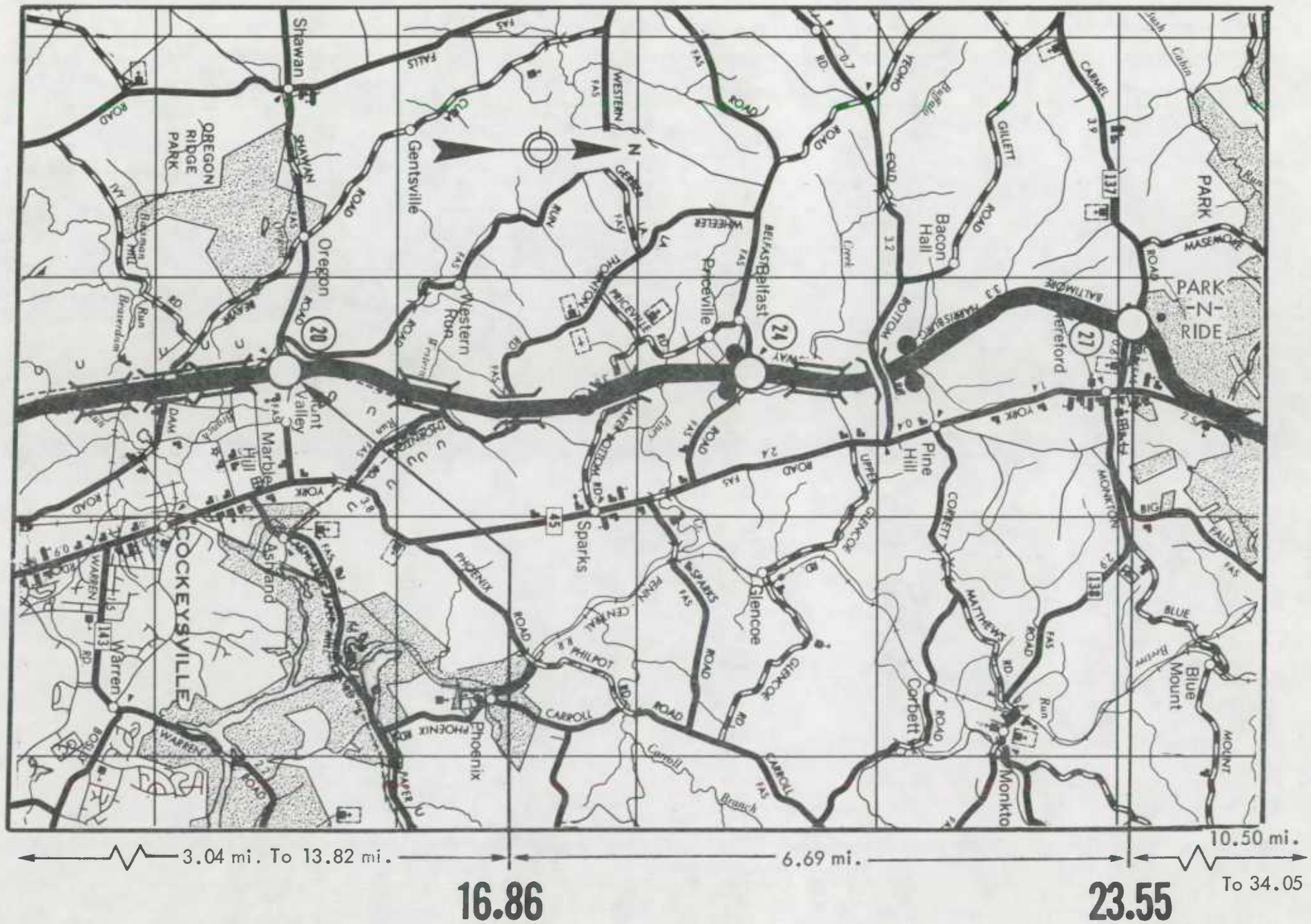

INTERSTATE ROUTE 83

SHEET 2 OF 3

STATE: MARYLAND CODE: 24

ROUTE: 083

TABLE B - DESIGN CLASSIFICATION AND COST ESTIMATE BY ESTIMATE SECTIONS WITH ROUTE TOTALS

ITEM	ESTIMATE SECTION MILEPOST							TOTAL FOR ROUTE
	0.00	16.86	23.55					
1. FINANCE CODE	20	22	20					
2. SECTION LENGTH	16.86	6.69	10.50					34.05
3. CLASS: RURAL (R) OR URBAN AREA I.D. (NAME AND CODE)	U	R	R					
	256							
	BALTIMORE							
4. MILEAGE INCREMENT: CODE(1,2, OR 3)	1	1	1					
5. ROUTE SIGNIFICANCE: CODE (N OR L)	L	N	N					
6. DESIGN SPEED (V)	50	60	60					
7. BASE YEAR TRAFFIC (1982 ADT)	14,094	26,350	20,550					
8. TRAFFIC A. DESIGN YEAR	1999	1975	1975					
B. ADT DESIGN YEAR	48,500	31,500	16,600					
C. DHV DESIGN YEAR	4,850	3,780	2,490					
D. DIRECTION DISTRIBUTION FACTOR	60	50	60					
E. T% TRUCKS DESIGN YEAR DHV	03	06	09					
F. T% TRUCKS DESIGN YEAR ADT	07	08	21					
9. NUMBER LANES TO BE CONSTRUCTED THIS ESTIMATE	06	00	00					
10. ULTIMATE NUMBER THROUGH TRAFFIC LANES	06	04	04					
11. TYPICAL CROSS-SECTION REFERENCE	354	302	303					
12. RIGHT-OF-WAY WIDTH: PREVAILING	250	250	300					
13. MEDIAN WIDTH: PREVAILING	16	50	76					
14. STATUS OF DEVELOPMENT DEC. 31, 1983 (PR-511)	1A1F	3A2	1A1F					
WORK CLASSIFICATION	ESTIMATED COSTS (1,000 DOLLARS)							
1. PRELIMINARY ENGINEERING	0	0	0					
2. R.O.W. A. ACQUISITION	0	0	0					
B. RELOCATION	0	0	0					
3. UTILITY ADJUSTMENTS	0	0	0					
4. EROSION CONTROL, CLEAR, GRUB, GRADE, DRAIN, & MINOR STRUCTURES	0	0	0					
5. SUBBASE,BASE, SURFACING, & SHOULDERS	0	0	0					
6. R.R. GRADE SEPARATIONS	0	0	0					
7. HIGHWAY GRADE SEPARATIONS WITHOUT RAMPS	0	0	0					
8. INTERCHANGES	0	0	0					
9. OTHER BRIDGES, TUNNELS, AND WALLS	0	0	0					
10. TRAFFIC CONTROL DEVICES	0	0	0					
11. WEIGH STATIONS, PEDESTRIAN AND BICYCLE FACILITIES	0	0	0					
12. SAFETY WORK ON COMPLETED SECTIONS	0	0	0					
13. NOISE ABATEMENT MEASURES	0	0	0					
14. ROADSIDE IMPROVEMENT A. LANDSCAPE PLANTING	0	0	0					
B. REST AREAS & OVERLOOKS	0	0	0					
15. ALL OTHER ITEMS: MAINT. OF TRAF., TRAINING, MOBIL, ETC.	0	32	0					32
16. SUBTOTAL, LINES 4 THRU 15	0	32	0					32
17. CONSTRUCTION ENGINEERING & CONTINGENCIES, 15% of LINE 16	0	5	0					5
18. TOTAL COST OF CONSTRUCTION, LINES 16 & 17	0	37	0					37
19. TOTAL ESTIMATE COST, LINES 1, 2, 3, & 18	0	37	0					37

** ROUNDED TO ZERO

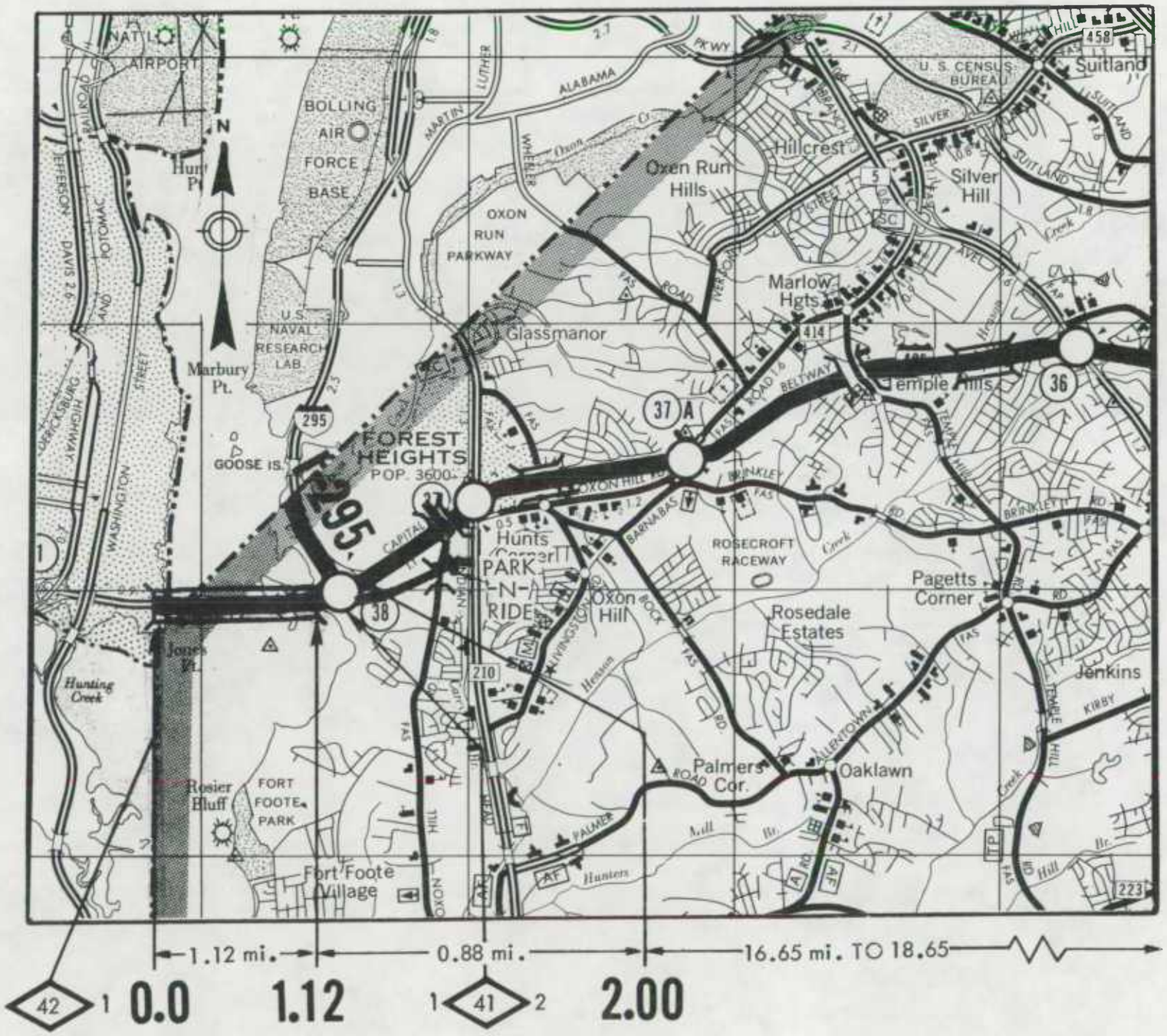

LEGEND

- Interstate Location Status 4 thru 1
- Interstate Location Status 5a(2) or 5a(3)
- Segments Approved Under Section 139 Title 23, USC, (non-chargeable).
- Interchange
- Highway Grade Separation -No Connection
- Railroad Grade Separation
- Combination Highway-Railroad Grade Separation
- Other Bridge
- Tunnel
- TOLL — Toll Bridge, Tunnel, Highway or Combination
- Frontage Road
- Terminated Cross Road
- Intersection At-Grade
- Urban Area Boundary
- Safety Rest Area
- 13 — Post Mileage
- 1 2 — Route Sections
- 2.8 — Estimate Section Number

MARYLAND

INTERSTATE ROUTE 95

SHEET 1 OF 11

DATE: DECEMBER 31, 1987

SCALE IN MILES

0 1 2

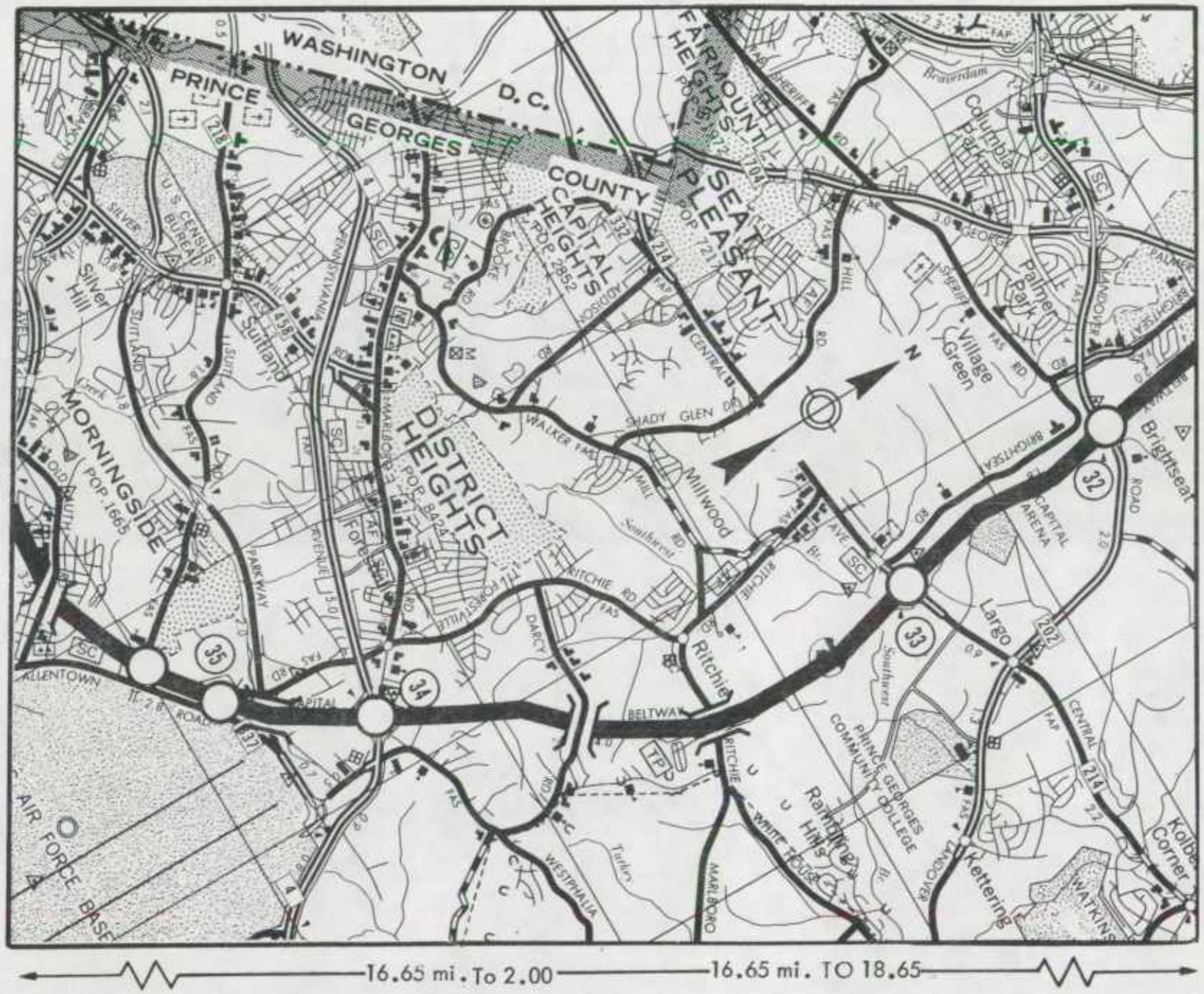

INTERSTATE ROUTE 95

SHEET 2 OF 11

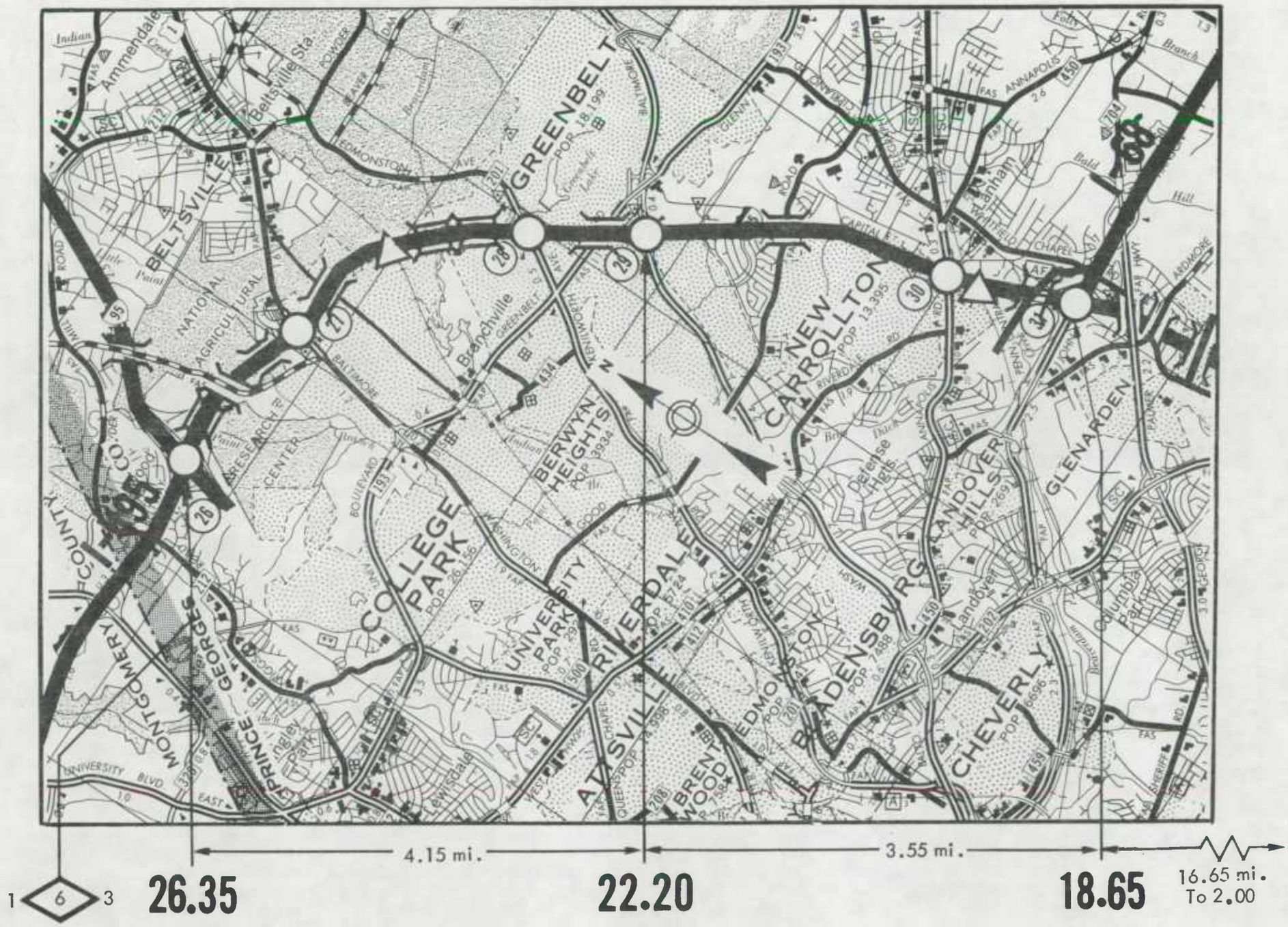

INTERSTATE ROUTE 95

SHEET 3 OF 11

STATE: MARYLAND CODE: 24

ROUTE: 095

TABLE B - DESIGN CLASSIFICATION AND COST ESTIMATE BY ESTIMATE SECTIONS WITH ROUTE TOTALS

ITEM	ESTIMATE SECTION MILEPOST							TOTAL FOR ROUTE
	0.00	1.12	2.00	18.65	26.35	27.39		108.88
1. FINANCE CODE	22	20	22	20	22	20		
2. SECTION LENGTH	1.12	0.88	16.65	7.70	1.04	81.49		
3. CLASS: RURAL (R) OR URBAN AREA I.D. (NAME AND CODE)	U	U	U	U	U	U		
	796	796	796	796	796	796		
	WASHINGTON	WASHINGTON	WASHINGTON	WASHINGTON	WASHINGTON	WASHINGTON		
4. MILEAGE INCREMENT: CODE(1,2, OR 3)	1	1	1	1	1	1		
5. ROUTE SIGNIFICANCE: CODE (N OR L)	N	N	N	N	N	N		
6. DESIGN SPEED (V)	60	60	60	60	60	70		
7. BASE YEAR TRAFFIC (1982 ADT)	114,200	118,800	118,800	118,800	85,250	85,250		
8. TRAFFIC A. DESIGN YEAR	1990	1990	1990	1990	1992	1992		
B. ADT DESIGN YEAR	140,000	140,000	130,000	140,000	100,300	100,300		
C. DHV DESIGN YEAR	6,500	6,500	6,000	6,500	12,040	12,040		
D. DIRECTION DISTRIBUTION FACTOR	55	55	55	55	60	60		
E. T% TRUCKS DESIGN YEAR DHV	09	09	09	09	07	07		
F. T% TRUCKS DESIGN YEAR ADT	11	11	11	11	10	10		
9. NUMBER LANES TO BE CONSTRUCTED THIS ESTIMATE	00	00	00	00	00	00		
10. ULTIMATE NUMBER THROUGH TRAFFIC LANES	06	06	08	08	08	08		
11. TYPICAL CROSS-SECTION REFERENCE	332	308	316	316	316	316		
12. RIGHT-OF-WAY WIDTH: PREVAILING	1100	300	300	300	350	350		
13. MEDIAN WIDTH: PREVAILING	10	50	54	54	125	125		
14. STATUS OF DEVELOPMENT DEC. 31, 1983 (PR-511)	1A2F	1A1F	1A2F	1A1F	1A2F	1A1F		
WORK CLASSIFICATION					ESTIMATED COSTS (1,000 DOLLARS)			
1. PRELIMINARY ENGINEERING	0	0	0	0	0	0		
2. R.O.W. A. ACQUISITION	0	0	0	0	0	0		
B. RELOCATION	0	0	0	0	0	0		
3. UTILITY ADJUSTMENTS	0	0	0	0	0	0		
4. EROSION CONTROL, CLEAR, GRUB, GRADE, DRAIN, & MINOR STRUCTURES	0	0	0	0	0	0		
5. SUBBASE,BASE, SURFACING, & SHOULDERS	0	0	0	0	0	0		
6. R.R. GRADE SEPARATIONS	0	0	0	0	0	0		
7. HIGHWAY GRADE SEPARATIONS WITHOUT RAMPS	0	0	0	0	0	0		
8. INTERCHANGES	0	0	0	0	0	0		
9. OTHER BRIDGES, TUNNELS, AND WALLS	0	0	0	0	0	0		
10. TRAFFIC CONTROL DEVICES	0	0	0	0	0	0		
11. WEIGH STATIONS, PEDESTRIAN AND BICYCLE FACILITIES	0	0	0	0	0	0		
12. SAFETY WORK ON COMPLETED SECTIONS	0	0	0	0	0	0		
13. NOISE ABATEMENT MEASURES	0	0	0	0	0	0		
14. ROADSIDE IMPROVEMENT A. LANDSCAPE PLANTING	0	0	0	0	0	0		
B. REST AREAS & OVERLOOKS	0	0	0	0	0	0		
15. ALL OTHER ITEMS: MAINT. OF TRAF., TRAINING, MOBIL, ETC.	11	0	81	0	2,142	0		2,234
16. SUBTOTAL, LINES 4 THRU 15	11	0	81	0	2,142	0		2,234
17. CONSTRUCTION ENGINEERING & CONTINGENCIES, 15% of LINE 16	2	0	12	0	321	0		335
18. TOTAL COST OF CONSTRUCTION, LINES 16 & 17	13	0	93	0	2,463	0		2,569
19. TOTAL ESTIMATE COST, LINES 1, 2, 3, & 18	13	0	93	0	2,463	0		2,569

** ROUNDED TO ZERO

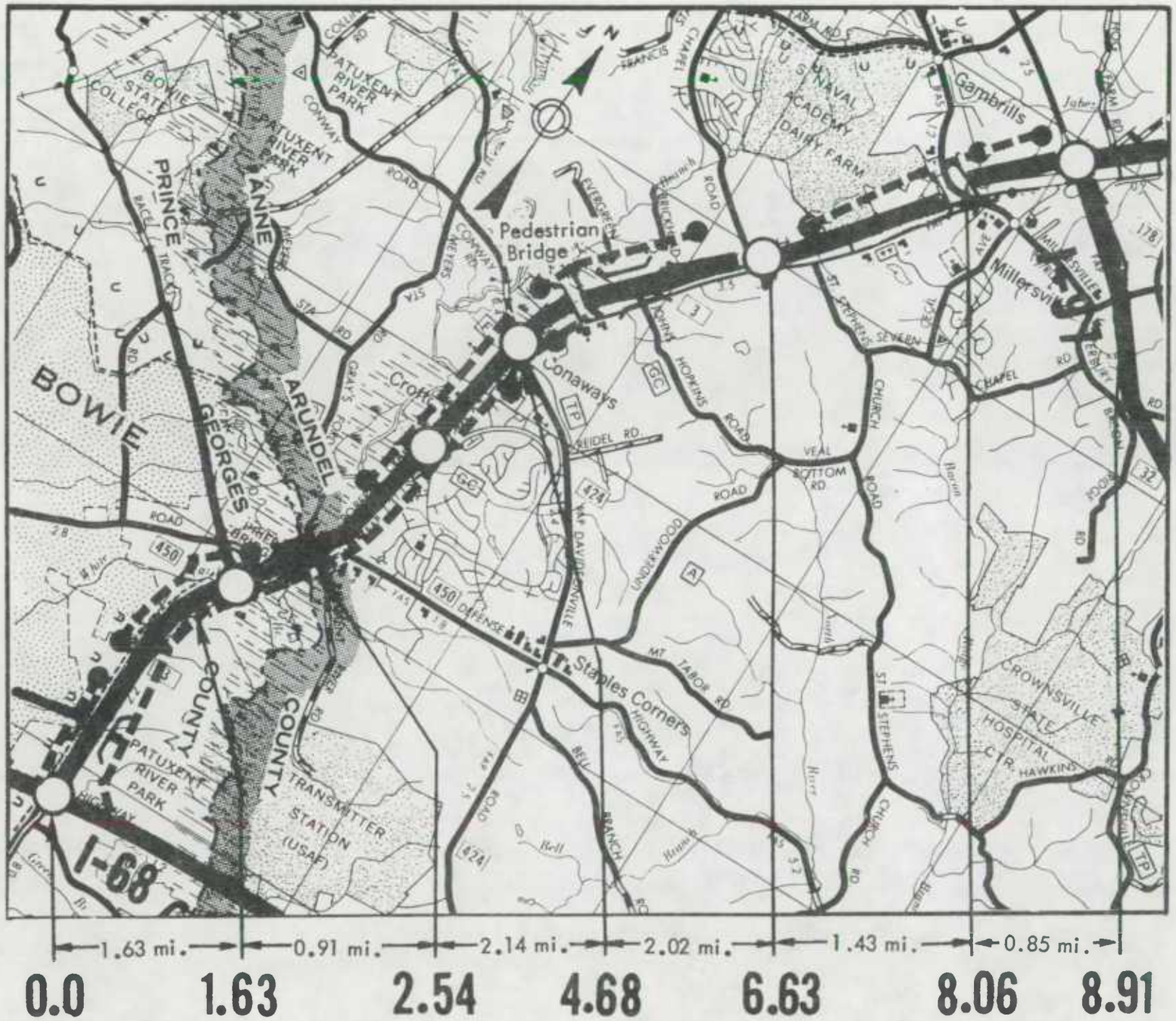

LEGEND

- Interstate Location Status 4 thru 1
- Interstate Location Status 5a(2) or 5a(3)
- Segments Approved Under Section 139 Title 23, USC, (non-chargeable).
- Interchange
- Highway Grade Separation -No Connection
- Railroad Grade Separation
- Combination Highway-Railroad Grade Separation
- Other Bridge
- Tunnel
- TOLL — Toll Bridge, Tunnel, Highway or Combination
- Frontage Road
- Terminated Cross Road
- Intersection At-Grade
- U U — Urban Area Boundary
- Safety Rest Area
- 13 — Post Mileage
- 1 2 — Route Sections
- 2.8 — Estimate Section Number

MARYLAND

INTERSTATE ROUTE 297

SHEET 1 OF 1

DATE: DECEMBER 31, 1987

SCALE IN MILES

0 1 2

STATE: MARYLAND CODE: 24

ROUTE: 297

TABLE B - DESIGN CLASSIFICATION AND COST ESTIMATE BY ESTIMATE SECTIONS WITH ROUTE TOTALS

ITEM	ESTIMATE SECTION MILEPOST 0.00							TOTAL FOR ROUTE
1. FINANCE CODE	22							
2. SECTION LENGTH	8.91							8.91
3. CLASS: RURAL (R) OR URBAN AREA I.D. (NAME AND CODE)	R							
4. MILEAGE INCREMENT: CODE(1,2, OR 3)	2							
5. ROUTE SIGNIFICANCE: CODE (N OR L)	N							
6. DESIGN SPEED (V)	70							
7. BASE YEAR TRAFFIC (1982 ADT)	33,000							
8. TRAFFIC A. DESIGN YEAR	2006							
B. ADT DESIGN YEAR	55,400							
C. DHV DESIGN YEAR	4,788							
D. DIRECTION DISTRIBUTION FACTOR	60							
E. T% TRUCKS DESIGN YEAR DHV	09							
F. T% TRUCKS DESIGN YEAR ADT	17							
9. NUMBER LANES TO BE CONSTRUCTED THIS ESTIMATE	06							
10. ULTIMATE NUMBER THROUGH TRAFFIC LANES	06							
11. TYPICAL CROSS-SECTION REFERENCE	396							
12. RIGHT-OF-WAY WIDTH: PREVAILING	300							
13. MEDIAN WIDTH: PREVAILING	76							
14. STATUS OF DEVELOPMENT DEC. 31, 1983 (PR-511)	4A1							
WORK CLASSIFICATION	ESTIMATED COSTS (1,000 DOLLARS)							
1. PRELIMINARY ENGINEERING	0							
2. R.O.W. A. ACQUISITION	0							
B. RELOCATION	0							
3. UTILITY ADJUSTMENTS	0							
4. EROSION CONTROL, CLEAR, GRUB, GRADE, DRAIN, & MINOR STRUCTURES	0							
5. SUBBASE,BASE, SURFACING, & SHOULDERS	0							
6. R.R. GRADE SEPARATIONS	0							
7. HIGHWAY GRADE SEPARATIONS WITHOUT RAMPS	0							
8. INTERCHANGES	0							
9. OTHER BRIDGES, TUNNELS, AND WALLS	0							
10. TRAFFIC CONTROL DEVICES	0							
11. WEIGH STATIONS, PEDESTRIAN AND BICYCLE FACILITIES	0							
12. SAFETY WORK ON COMPLETED SECTIONS	0							
13. NOISE ABATEMENT MEASURES	0							
14. ROADSIDE IMPROVEMENT A. LANDSCAPE PLANTING	0							
B. REST AREAS & OVERLOOKS	0							
15. ALL OTHER ITEMS: MAINT. OF TRAF., TRAINING, MOBIL, ETC.	59							59
16. SUBTOTAL, LINES 4 THRU 15	59							59
17. CONSTRUCTION ENGINEERING & CONTINGENCIES, 15% of LINE 16	9							9
18. TOTAL COST OF CONSTRUCTION, LINES 16 & 17	68							68
19. TOTAL ESTIMATE COST, LINES 1, 2, 3, & 18	63							63

** ROUNDED TO ZERO

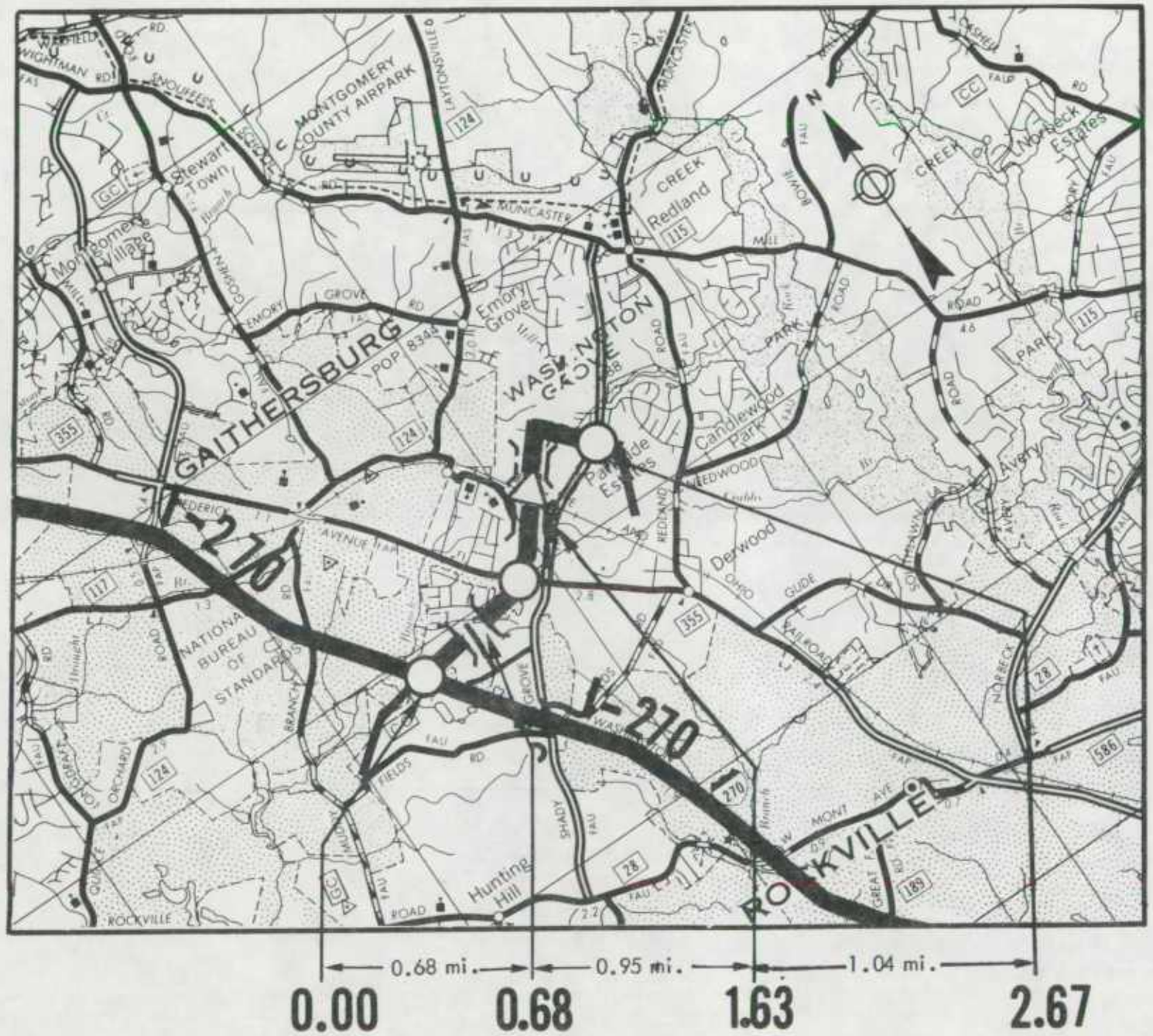

LEGEND

- Interstate Location Status 4 thru 1
- Interstate Location Status 5a(2) or 5a(3)
- Segments Approved Under Section 139 Title 23, USC, (non-chargeable).
- Interchange
- Highway Grade Separation -No Connection
- Railroad Grade Separation
- Combination Highway-Railroad Grade Separation
- Other Bridge
- Tunnel
- TOLL — Toll Bridge, Tunnel, Highway or Combination
- Frontage Road
- Terminated Cross Road
- Intersection At-Grade
- U U — Urban Area Boundary
- Safety Rest Area
- 13 — Post Mileage
- 1 2 — Route Sections
- 2.8 — Estimate Section Number

MARYLAND

INTERSTATE ROUTE 370

SHEET 1 OF 1

DATE DECEMBER 31 1987

SCALE IN MILES

0 1 2

STATE: MARYLAND CODE: 24

ROUTE: 370

TABLE 8 - DESIGN CLASSIFICATION AND COST ESTIMATE BY ESTIMATE SECTIONS WITH ROUTE TOTALS

ITEM	ESTIMATE SECTION MILEPOST							TOTAL FOR ROUTE
	0.00	0.68	1.63					
1. FINANCE CODE	22	22	22					
2. SECTION LENGTH	0.68	0.95	1.04					2.67
3. CLASS: RURAL (R) OR URBAN AREA I.D. (NAME AND CODE)	U	U	U					
	796	796	796					
	WASHINGTON	WASHINGTON	WASHINGTON					
4. MILEAGE INCREMENT: CODE(1,2, OR 3)	2	2	2					
5. ROUTE SIGNIFICANCE: CODE (N OR L)	L	L	L					
6. DESIGN SPEED (V)	70	70	50					
7. BASE YEAR TRAFFIC (1982 ADT)	28,875	28,875	11,550					
8. TRAFFIC A. DESIGN YEAR	1980	1980	1980					
B. ADT DESIGN YEAR	69,500	69,500	33,900					
C. DHV DESIGN YEAR	6,340	6,340	3,300					
D. DIRECTION DISTRIBUTION FACTOR	55	55	55					
E. T% TRUCKS DESIGN YEAR DHV	05	05	05					
F. T% TRUCKS DESIGN YEAR ADT	11	11	11					
9. NUMBER LANES TO BE CONSTRUCTED THIS ESTIMATE	04	04	04					
10. ULTIMATE NUMBER THROUGH TRAFFIC LANES	04	04	04					
11. TYPICAL CROSS-SECTION REFERENCE	379	379	379					
12. RIGHT-OF-WAY WIDTH: PREVAILING	300	300	200					
13. MEDIAN WIDTH: PREVAILING	54	54	54					
14. STATUS OF DEVELOPMENT DEC. 31, 1983 (PR-511)	2A1F	2A1F	2A1F					
WORK CLASSIFICATION	ESTIMATED COSTS (1,000 DOLLARS)							
1. PRELIMINARY ENGINEERING	0	0	0					
2. R.O.W. A. ACQUISITION	0	0	0					
B. RELOCATION	0	0	0					
3. UTILITY ADJUSTMENTS	0	0	0					
4. EROSION CONTROL, CLEAR, GRUB, GRADE, DRAIN, & MINOR STRUCTURES	0	0	0					
5. SUBBASE,BASE, SURFACING, & SHOULDERS	0	0	0					
6. R.R. GRADE SEPARATIONS	0	0	0					
7. HIGHWAY GRADE SEPARATIONS WITHOUT RAMPS	0	0	0					
8. INTERCHANGES	0	0	0					
9. OTHER BRIDGES, TUNNELS, AND WALLS	0	0	0					
10. TRAFFIC CONTROL DEVICES	0	0	0					
11. WEIGH STATIONS, PEDESTRIAN AND BICYCLE FACILITIES	0	0	0					
12. SAFETY WORK ON COMPLETED SECTIONS	0	0	0					
13. NOISE ABATEMENT MEASURES	0	0	0					
14. ROADSIDE IMPROVEMENT A. LANDSCAPE PLANTING	0	0	0					
B. REST AREAS & OVERLOOKS	0	0	0					
15. ALL OTHER ITEMS: MAINT. OF TRAF., TRAINING, MOBIL, ETC.	84	36	8					128
16. SUBTOTAL, LINES 4 THRU 15	84	36	8					128
17. CONSTRUCTION ENGINEERING & CONTINGENCIES, 15% of LINE 16	13	5	1					19
18. TOTAL COST OF CONSTRUCTION, LINES 16 & 17	96	42	9					147
19. TOTAL ESTIMATE COST, LINES 1, 2, 3, & 18	96	42	9					147

** ROUNDED TO ZERO

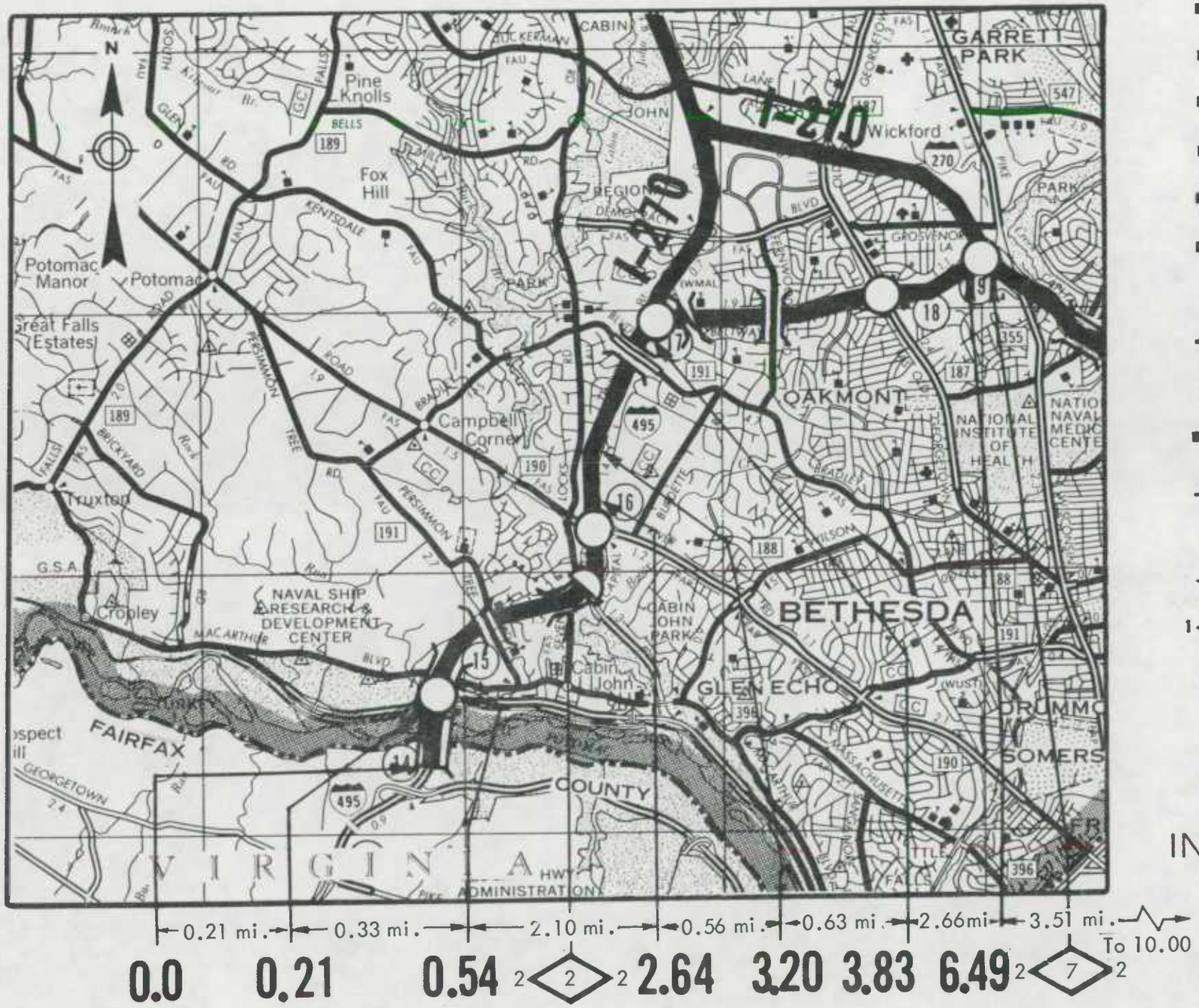

LEGEND

- Interstate Location Status 4 thru 1
- Interstate Location Status 5a(2) or 5a(3)
- Segments Approved Under Section 139 Title 23, USC, (non-chargeable).
- Interchange
- Highway Grade Separation -No Connection
- Railroad Grade Separation
- Combination Highway-Railroad Grade Separation
- Other Bridge
- Tunnel
- TOLL — Toll Bridge, Tunnel, Highway or Combination
- Frontage Road
- Terminated Cross Road
- Intersection At-Grade
- U U — Urban Area Boundary
- Safety Rest Area
- 13 — Post Mileage
- 1 2 — Route Sections
- 2.8 — Estimate Section Number

MARYLAND

INTERSTATE ROUTE 495

SHEET 1 OF 2

DATE: DECEMBER 31, 1985

SCALE IN MILES

0 1 2

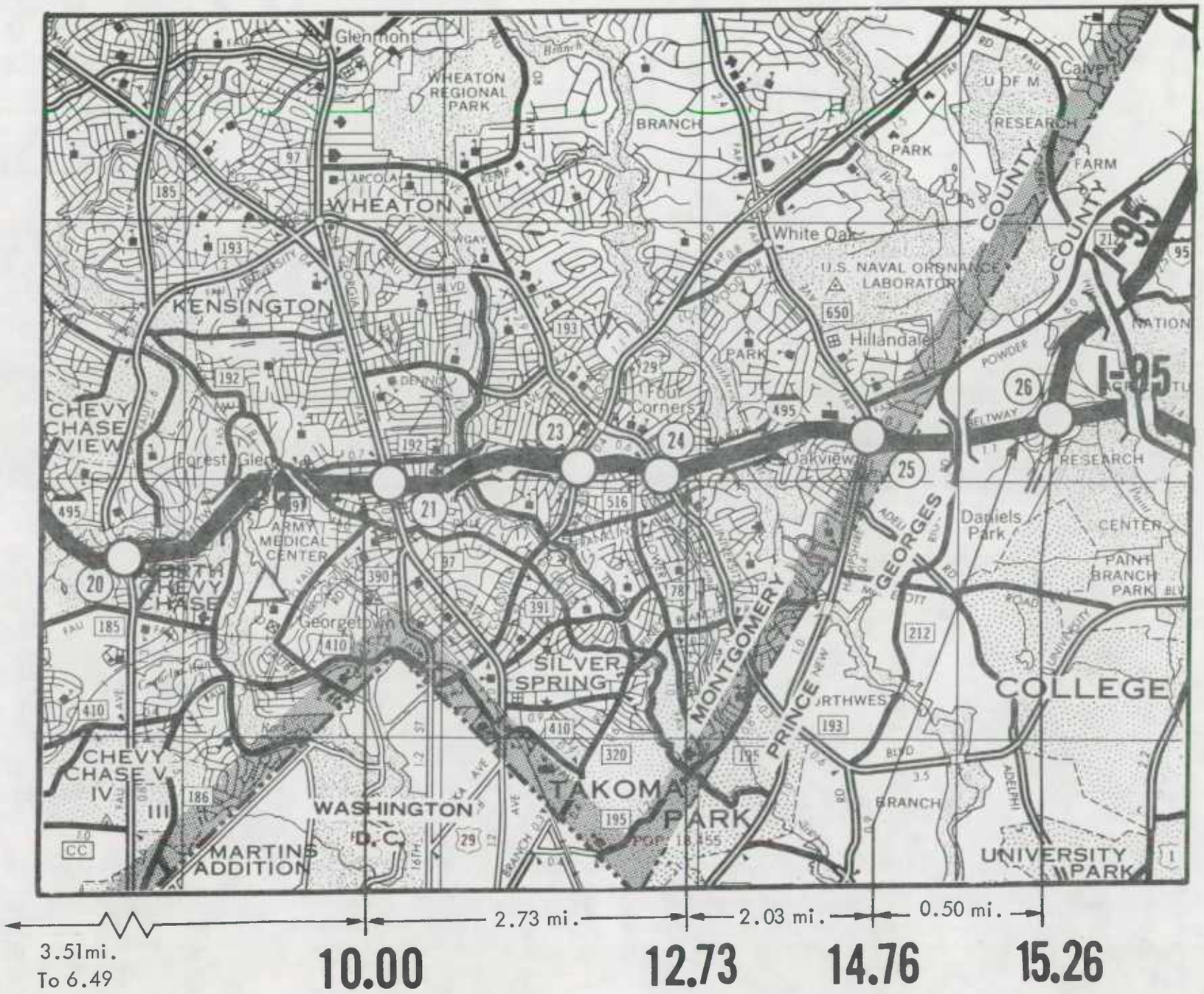

INTERSTATE ROUTE 495

SHEET 2 OF 2

STATE: MARYLAND CODE: 24
ROUTE: 495

TABLE B - DESIGN CLASSIFICATION AND COST ESTIMATE BY ESTIMATE SECTIONS WITH ROUTE TOTALS

ITEM	ESTIMATE SECTION MILEPOST							TOTAL FOR ROUTE
	0.00	0.21	0.54	6.49	10.00			
1. FINANCE CODE	20	25	20	25	20			
2. SECTION LENGTH	0.21	0.33	5.95	3.51	5.26			15.26
3. CLASS: RURAL (R) OR URBAN AREA I.D. (NAME AND CODE)	U	U	U	U	U			
	796	796	796	796	796			
	WASHINGTON	WASHINGTON	WASHINGTON	WASHINGTON	WASHINGTON			
4. MILEAGE INCREMENT: CODE(1,2, OR 3)	1	1	1	1	1			
5. ROUTE SIGNIFICANCE: CODE (N OR L)	N	N	N	N	N			
6. DESIGN SPEED (V)	60	60	60	60	60			
7. BASE YEAR TRAFFIC (1982 ADT)	132,000	127,793	127,793	151,800	129,800			
8. TRAFFIC A. DESIGN YEAR	1990	1990	1990	1984	1990			
B. ADT DESIGN YEAR	145,000	156,000	156,000	140,400	125,000			
C. DHV DESIGN YEAR	14,500	15,600	15,600	11,900	13,000			
D. DIRECTION DISTRIBUTION FACTOR	55	55	55	55	55			
E. T% TRUCKS DESIGN YEAR DHV	09	09	09	09	09			
F. T% TRUCKS DESIGN YEAR ADT	11	11	11	11	11			
9. NUMBER LANES TO BE CONSTRUCTED THIS ESTIMATE	00	00	00	02	00			
10. ULTIMATE NUMBER THROUGH TRAFFIC LANES	06	06	06	08	08			
11. TYPICAL CROSS-SECTION REFERENCE	330	307	307	309	363			
12. RIGHT-OF-WAY WIDTH: PREVAILING	300	300	300	300	200			
13. MEDIAN WIDTH: PREVAILING	54	54	36	36	16			
14. STATUS OF DEVELOPMENT DEC. 31, 1983 (PR-511)	1A1F	1A2F	1A1F	1A2F	1A1F			
WORK CLASSIFICATION					ESTIMATED COSTS (1,000 DOLLARS)			
1. PRELIMINARY ENGINEERING	0	0	0	0	0			
2. R.O.W. A. ACQUISITION	0	0	0	0	0			
B. RELOCATION	0	0	0	0	0			
3. UTILITY ADJUSTMENTS	0	0	0	0	0			
4. EROSION CONTROL, CLEAR, GRUB, GRADE, DRAIN, & MINOR STRUCTURES	0	0	0	0	0			
5. SUBBASE,BASE, SURFACING, & SHOULDERS	0	0	0	0	0			
6. R.R. GRADE SEPARATIONS	0	0	0	0	0			
7. HIGHWAY GRADE SEPARATIONS WITHOUT RAMPS	0	0	0	0	0			
8. INTERCHANGES	0	0	0	0	0			
9. OTHER BRIDGES, TUNNELS, AND WALLS	0	0	0	0	0			
10. TRAFFIC CONTROL DEVICES	0	0	0	0	0			
11. WEIGH STATIONS , PEDESTRIAN AND BICYCLE FACILITIES	0	0	0	0	0			
12. SAFETY WORK ON COMPLETED SECTIONS	0	0	0	0	0			
13. NOISE ABATEMENT MEASURES	0	0	0	0	0			
14. ROADSIDE IMPROVEMENT A. LANDSCAPE PLANTING	0	0	0	0	0			
B. REST AREAS & OVERLOOKS	0	0	0	0	0			
15. ALL OTHER ITEMS: MAINT. OF TRAF., TRAINING, MOBIL, ETC.	0	1	0	104	0			105
16. SUBTOTAL, LINES 4 THRU 15	0	1	0	104	0			105
17. CONSTRUCTION ENGINEERING & CONTINGENCIES, 15% of LINE 16	0	0	0	16	0			16
18. TOTAL COST OF CONSTRUCTION, LINES 16 & 17	0	1	0	119	0			120
19. TOTAL ESTIMATE COST, LINES 1, 2, 3, & 18	0	1	0	119	0			120

** ROUNDED TO ZERO

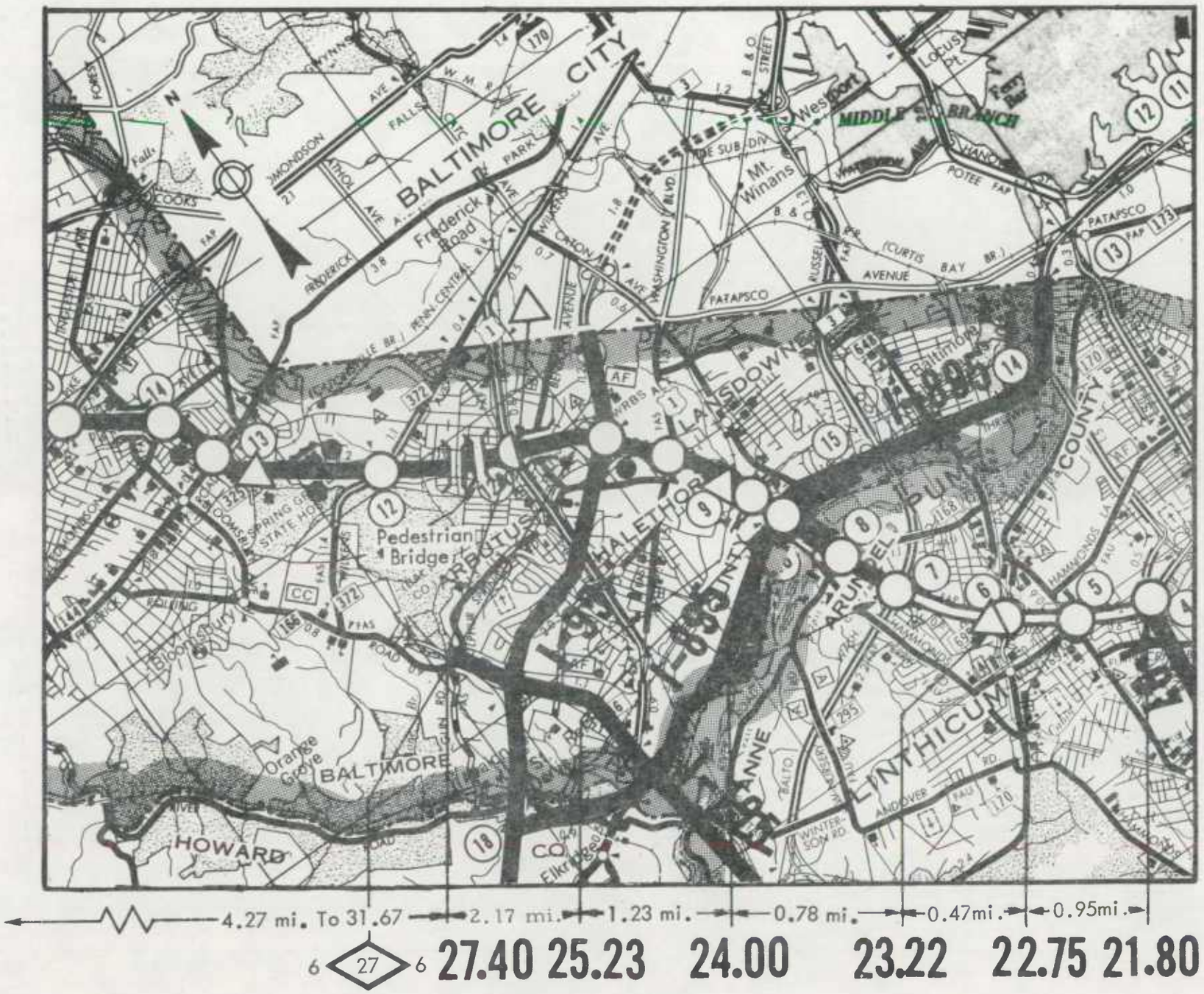

LEGEND

- Interstate Location Status 4 thru 1
- Interstate Location Status 5a(2) or 5a(3)
- Segments Approved Under Section 139 Title 23, USC, (non-chargeable).
- Interchange
- Highway Grade Separation -No Connection
- Railroad Grade Separation
- Combination Highway-Railroad Grade Separation
- Other Bridge
- Tunnel
- TOLL — Toll Bridge, Tunnel, Highway or Combination
- Frontage Road
- Terminated Cross Road
- Intersection At-Grade
- U U — Urban Area Boundary
- Safety Rest Area
- 13 — Post Mileage
- 1 2 — Route Sections
- 2.8 — Estimate Section Number

MARYLAND

INTERSTATE ROUTE 695

SHEET 1 OF 3

DATE: DECEMBER 31, 1987

SCALE IN MILES

0 1 2

← 4.27 mi. To 27.40 — 6 ⟨32⟩ 6 — 4.91 mi. — 5.34 mi. — 0.38 mi. — I-83 To 42.30 →

31.67 **36.58** **41.92** **42.30**

INTERSTATE ROUTE 695

SHEET 2 OF 3

STATE: MARYLAND CODE: 24

ROUTE: 695

TABLE B - DESIGN CLASSIFICATION AND COST ESTIMATE BY ESTIMATE SECTIONS WITH ROUTE TOTALS

ITEM	ESTIMATE SECTION MILEPOST							TOTAL FOR ROUTE
	21.80	24.00	27.40	31.67				
1. FINANCE CODE	20	25	25	20				
2. SECTION LENGTH	2.20	3.40	4.27	20.91				30.78
3. CLASS: RURAL (R) OR URBAN AREA I.D. (NAME AND CODE)	U	U	U	U				
	256	256	256	256				
	BALTIMORE	BALTIMORE	BALTIMORE	BALTIMORE				
4. MILEAGE INCREMENT: CODE(1,2, OR 3)	3	1	1	1				
5. ROUTE SIGNIFICANCE: CODE (N OR L)	N	N	N	N				
6. DESIGN SPEED (V)	60	60	60	60				
7. BASE YEAR TRAFFIC (1982 ADT)	61,250	93,000	114,200	114,600				
8. TRAFFIC A. DESIGN YEAR	2005	1975	1975	1975				
B. ADT DESIGN YEAR	136,000	58,300	86,200	78,000				
C. DHV DESIGN YEAR	13,600	5,830	8,620	7,800				
D. DIRECTION DISTRIBUTION FACTOR	60	62	62	62				
E. T% TRUCKS DESIGN YEAR DHV	03	04	04	04				
F. T% TRUCKS DESIGN YEAR ADT	05	07	07	07				
9. NUMBER LANES TO BE CONSTRUCTED THIS ESTIMATE	04	00	00	00				
10. ULTIMATE NUMBER THROUGH TRAFFIC LANES	12	06	06	08				
11. TYPICAL CROSS-SECTION REFERENCE	394	308	307	314				
12. RIGHT-OF-WAY WIDTH: PREVAILING	300	300	300	300				
13. MEDIAN WIDTH: PREVAILING	26	26	54	30				
14. STATUS OF DEVELOPMENT DEC. 31, 1983 (PR-511)	1A1F	1A2F	1A2F	1A1F				
WORK CLASSIFICATION	ESTIMATED COSTS (1,000 DOLLARS)							
1. PRELIMINARY ENGINEERING	0	0	0	0				
2. R.O.W. A. ACQUISITION	0	0	0	0				
B. RELOCATION	0	0	0	0				
3. UTILITY ADJUSTMENTS	0	0	0	0				
4. EROSION CONTROL, CLEAR, GRUB, GRADE, DRAIN, & MINOR STRUCTURES	0	0	0	0				
5. SUBBASE,BASE, SURFACING, & SHOULDERS	0	0	0	0				
6. R.R. GRADE SEPARATIONS	0	0	0	0				
7. HIGHWAY GRADE SEPARATIONS WITHOUT RAMPS	0	0	0	0				
8. INTERCHANGES	0	0	0	0				
9. OTHER BRIDGES, TUNNELS, AND WALLS	0	0	0	0				
10. TRAFFIC CONTROL DEVICES	0	0	0	0				
11. WEIGH STATIONS, PEDESTRIAN AND BICYCLE FACILITIES	0	0	0	0				
12. SAFETY WORK ON COMPLETED SECTIONS	0	0	0	0				
13. NOISE ABATEMENT MEASURES	0	0	0	0				
14. ROADSIDE IMPROVEMENT A. LANDSCAPE PLANTING	0	0	0	0				
B. REST AREAS & OVERLOOKS	0	0	0	0				
15. ALL OTHER ITEMS: MAINT. OF TRAF., TRAINING, MOBIL, ETC.	0	250	3	0				253
16. SUBTOTAL, LINES 4 THRU 15	0	250	3	0				253
17. CONSTRUCTION ENGINEERING & CONTINGENCIES, 15% of LINE 16	0	37	0	0				37
18. TOTAL COST OF CONSTRUCTION, LINES 16 & 17	0	287	4	0				291
19. TOTAL ESTIMATE COST, LINES 1, 2, 3, & 18	0	287	4	0				291

** ROUNDED TO ZERO

TABLE C - COST ESTIMATES BY ROUTES AND STATE TOTAL

STATE MARYLAND

(INCLUDES ONLY THOSE COSTS ELIGIBLE FOR FAI FUNDING, FINANCE CODES 21, 22, 23, AND 25)

INTERSTATE ROUTE NUMBER	68		70		83		95		97		SUBTOTAL		TOTAL
CLASS: RURAL OR URBAN (R OR U)	RURAL	URBAN	RURAL	URBAN	RURAL	URBAN	RURAL	URBAN	RURAL	URBAN	RURAL	URBAN	
LENGTH, MILES	8.52	11.57	.00	1.74	6.69	.00	.00	18.81	12.09	5.48			
WORK CLASSIFICATION	ESTIMATED COSTS (1,000 DOLLARS)												
1. PRELIMINARY ENGINEERING	0	0	0	0	0	0	0	0	0	0			
2. R.O.W. A. ACQUISITION	5,531	27,320	0	0	0	0	0	0	6,223	14,552			
B. RELOCATION	0	0	0	0	0	0	0	0	0	0			
3. UTILITY ADJUSTMENTS	272	2,791	0	0	0	0	0	0	222	1,494			
4. EROSION CONTROL, CLEAR, GRUB, GRADE, DRAIN, MINOR STRUCT.	15,243	29,188	0	0	0	0	0	0	8,442	19,046			
5. SUBBASE, BASE, SURFACING, & SHOULDERS	17,571	42,084	0	0	0	0	0	0	13,809	22,172			
6. R.R. GRADE SEPARATIONS	0	0	0	0	0	0	0	0	0	0			
7. HIGHWAY GRADE SEPARATIONS WITHOUT RAMPS	6,546	11,161	0	0	0	0	0	0	0	3,816			
8. INTERCHANGES	16,064	60,327	0	0	0	0	0	0	2,473	42,238			
9. OTHER BRIDGES, TUNNELS, AND WALLS	2,199	14,713	0	0	0	0	0	0	3,040	721			
10. TRAFFIC CONTROL DEVICES	5,208	10,818	0	0	0	0	0	0	1,605	3,376			
11. WEIGH STATIONS, PEDESTRIAN AND BICYCLE FACILITIES	6	197	0	0	0	0	0	0	0	0			
12. SAFETY WORK ON COMPLETED SECTIONS	0	0	0	0	0	0	0	0	0	0			
13. NOISE ABATEMENT MEASURES	582	3,213	0	0	0	0	0	0	0	12,286			
14. ROADSIDE IMPROVEMENT A. LANDSCAPE PLANTING	0	0	0	0	0	0	0	0	0	0			
B. REST AREAS & OVERLOOKS	0	0	0	0	0	0	0	0	0	0			
15. ALL OTHER ITEMS	6,577	17,541	0	66	32	0	0	2,234	2,986	7,297			
16. SUBTOTAL, LINE 4 THRU 15	69,997	189,243	0	66	32	0	0	2,234	32,355	110,950			
17. CONSTRUCTION ENG'R & CONTINGENCIES, 15% OF LINE 16	10,500	28,386	0	10	5	0	0	335	4,853	16,641			
18. TOTAL COST OF CONSTRUCTION, LINES 16 & 17	80,497	217,627	0	76	37	0	0	2,569	37,208	127,591			
19. TOTAL ESTIMATE COST, LINES 1, 2, 3, & 18	86,300	247,738	0	76	37	0	0	2,569	43,653	143,637			
20. ROUTE TOTAL, RURAL PLUS URBAN	334,038		76		37		2,569		187,290				

TABLE C - COST ESTIMATES BY ROUTES AND STATE TOTAL

STATE MARYLAND

(INCLUDES ONLY THOSE COSTS ELIGIBLE FOR FAI FUNDING, FINANCE CODES 21, 22, 23, AND 25)

INTERSTATE ROUTE NUMBER	195		270		297		370		395		SUBTOTAL		TOTAL
CLASS: RURAL OR URBAN (R OR U)	RURAL	URBAN	RURAL	URBAN	RURAL	URBAN	RURAL	URBAN	RURAL	URBAN	RURAL	URBAN	
LENGTH, MILES	.00	1.45	3.48	14.56	8.91	.00	.00	2.67	.00	.24			
WORK CLASSIFICATION	ESTIMATED COSTS (1,000 DOLLARS)												
1. PRELIMINARY ENGINEERING	0	0	0	0	0	0	0	0	0	0			
2. R.O.W. A. ACQUISITION	0	2,631	0	11,844	0	0	0	0	0	0			
B. RELOCATION	0	0	0	0	0	0	0	0	0	0			
3. UTILITY ADJUSTMENTS	0	462	0	1,351	0	0	0	0	0	0			
4. EROSION CONTROL, CLEAR, GRUB, GRADE, DRAIN, MINOR STRUCT.	0	2,248	2,232	3,365	0	0	0	0	0	0			
5. SUBBASE, BASE, SURFACING, & SHOULDERS	0	2,314	7,536	8,674	0	0	0	0	0	0			
6. R.R. GRADE SEPARATIONS	0	0	0	0	0	0	0	0	0	0			
7. HIGHWAY GRADE SEPARATIONS WITHOUT RAMPS	0	4,653	0	2,779	0	0	0	0	0	0			
8. INTERCHANGES	0	9,561	0	9,849	0	0	0	0	0	0			
9. OTHER BRIDGES, TUNNELS, AND WALLS	0	0	0	2,357	0	0	0	0	0	0			
10. TRAFFIC CONTROL DEVICES	0	363	999	1,985	0	0	0	0	0	0			
11. WEIGH STATIONS, PEDESTRIAN AND BICYCLE FACILITIES	0	0	0	0	0	0	0	0	0	0			
12. SAFETY WORK ON COMPLETED SECTIONS	0	0	0	0	0	0	0	0	0	0			
13. NOISE ABATEMENT MEASURES	0	0	0	0	0	0	0	0	0	455			
14. ROADSIDE IMPROVEMENT A. LANDSCAPE PLANTING	0	0	0	0	0	0	0	0	0	0			
B. REST AREAS & OVERLOOKS	0	0	0	0	0	0	0	0	0	0			
15. ALL OTHER ITEMS	0	841	680	4,381	59	0	0	128	0	0			
16. SUBTOTAL, LINE 4 THRU 15	0	19,981	11,446	33,388	59	0	0	128	0	455			
17. CONSTRUCTION ENG'R & CONTINGENCIES, 15% OF LINE 16	0	2,998	1,717	5,011	9	0	0	19	0	68			
18. TOTAL COST OF CONSTRUCTION, LINES 16 & 17	0	22,979	13,163	38,399	68	0	0	147	0	523			
19. TOTAL ESTIMATE COST, LINES 1, 2, 3, & 18	0	26,072	13,163	51,594	68	0	0	147	0	523			
20. ROUTE TOTAL, RURAL PLUS URBAN	26,072		64,757		68		147		523				

TABLE C - COST ESTIMATES BY ROUTES AND STATE TOTAL

STATE MARYLAND

INCLUDES ONLY THOSE COSTS ELIGIBLE FOR FAI FUNDING, FINANCE CODES 21, 22, 23, AND 25)

INTERSTATE ROUTE NUMBER	495		695		795						SUBTOTAL		TOTAL
CLASS: RURAL OR URBAN (R OR U)	RURAL	URBAN	RURAL	URBAN	RURAL	URBAN	RURAL	URBAN	RURAL	URBAN	RURAL	URBAN	
LENGTH, MILES	.00	3.84	.00	7.67	.00	3.44	.	.	.	.	39.69	71.47	
WORK CLASSIFICATION	ESTIMATED COSTS (1,000 DOLLARS)												
1. PRELIMINARY ENGINEERING	0	0	0	0	0	0							
2. R.O.W. A. ACQUISITION	0	0	0	0	0	8,458					11,754	64,805	76,559
B. RELOCATION	0	0	0	0	0	0							
3. UTILITY ADJUSTMENTS	0	0	0	0	0	0					494	6,098	6,592
4. EROSION CONTROL, CLEAR, GRUB, GRADE, DRAIN, MINOR STRUCT.	0	0	0	0	0	0					25,917	53,847	79,764
5. SUBBASE, BASE, SURFACING, & SHOULDERS	0	0	0	0	0	0					38,916	75,244	114,160
6. R.R. GRADE SEPARATIONS	0	0	0	0	0	0							
7. HIGHWAY GRADE SEPARATIONS WITHOUT RAMPS	0	0	0	0	0	0					6,546	22,409	28,955
8. INTERCHANGES	0	0	0	0	0	0					18,537	121,975	140,512
9. OTHER BRIDGES, TUNNELS, AND WALLS	0	0	0	0	0	0					5,239	17,791	23,030
10. TRAFFIC CONTROL DEVICES	0	0	0	0	0	0					7,812	16,542	24,354
11. WEIGH STATIONS, PEDESTRIAN AND BICYCLE FACILITIES	0	0	0	0	0	0					6	197	203
12. SAFETY WORK ON COMPLETED SECTIONS	0	0	0	0	0	0							
13. NOISE ABATEMENT MEASURES	0	0	0	0	0	0					582	15,954	16,536
14. ROADSIDE IMPROVEMENT A. LANDSCAPE PLANTING	0	0	0	0	0	0							
B. REST AREAS & OVERLOOKS	0	0	0	0	0	0							
15. ALL OTHER ITEMS	0	105	0	253	0	346					10,334	33,192	43,526
16. SUBTOTAL, LINE 4 THRU 15	0	105	0	253	0	346					113,889	357,149	471,038
17. CONSTRUCTION ENG'R & CONTINGENCIES, 15% OF LINE 16	0	16	0	37	0	52					17,084	53,573	70,657
18. TOTAL COST OF CONSTRUCTION, LINES 16 & 17	0	120	0	291	0	397					130,973	410,719	541,692
19. TOTAL ESTIMATE COST, LINES 1, 2, 3, & 18	0	120	0	291	0	8,855					143,221	481,622	624,843
20. ROUTE TOTAL, RURAL PLUS URBAN	120		291		8,855		, ,		, ,				

TABLE D COST OF INTERSTATE BOND PROJECTS, ACI AND ADVANCE ACQUISITION PROJECTS

(PROJECTS COMPLETED OR IN AUTHORIZED STATUS AS OF JANUARY 1, 1988)

STATE OF MARYLAND

INTERSTATE ROUTE	ESTIMATE SECTION	PROJECT NO.	WORK CLASS	RURAL OR URBAN	ACTUAL OR ESTIMATED PROJECT COST ($1000)		TOTAL COST ($1000)
					FEDERAL (I) FUNDS	STATE MATCHING	
STATEWIDE INTERSTATE P.E. PROJECT		I-EST-89(001)	—	—	94	10	104
I-70	55.04-58.88	AC-I-70-1 (186)	CON	U	416	53	469
I-97	0.36-2.63	AC-I-97-1 (34)	CON	R	545	77	822
I-97	10.73-12.68	AC-I-97-1 (37)	CON	R	29,890	3,396	33,286
I-97	17.00-17.57	AC-I-97-1 (35)	CON	U	36,158	6,491	42,649
I-97		AC-I-97-1 (38)	CON	U	183	20	203
I-270	80.77-82.50	AC-I-270-7 (122)	CON	U	16,927	1,880	18,807
I-270	76.96-78.75	AC-I-270-7 (123)	CON	U	9,489	1,054	10,543
I-270	73.99-75.12	AC-I-270-7 (124)	CON	U	7,586	2,894	10,480
I-370	0.00-0.68	AC-I-370-1 (12)	CON	U	23,125	2,569	25,694
I-370	0.00-0.68	AC-I-370-1 (13)	CON	U	2,065	280	2,345
TOTAL	—	—	—	—	126,478	18,724	145,202

THE ABOVE PROJECTS ARE NOT INCLUDED IN TABLE 'B' OR TABLE 'C'