"22" on Line one Indicates "GAP"

OCTOBER 1986

1987 ESTIMATE OF THE COST OF COMPLETING THE

NATIONAL SYSTEM OF INTERSTATE & DEFENSE HIGHWAYS

IN THE STATE OF MARYLAND

DATA AS OF DECEMBER 31, 1985

PREPARED BY THE MARYLAND DEPARTMENT OF TRANSPORTATION, STATE HIGHWAY ADMINISTRATION IN COOPERATION WITH THE FHWA DEPARTMENT OF TRANSPORTATION IN ACCORDANCE WITH SECTION 104(b)(5)(A), TITLE 23, USC, HIGHWAYS

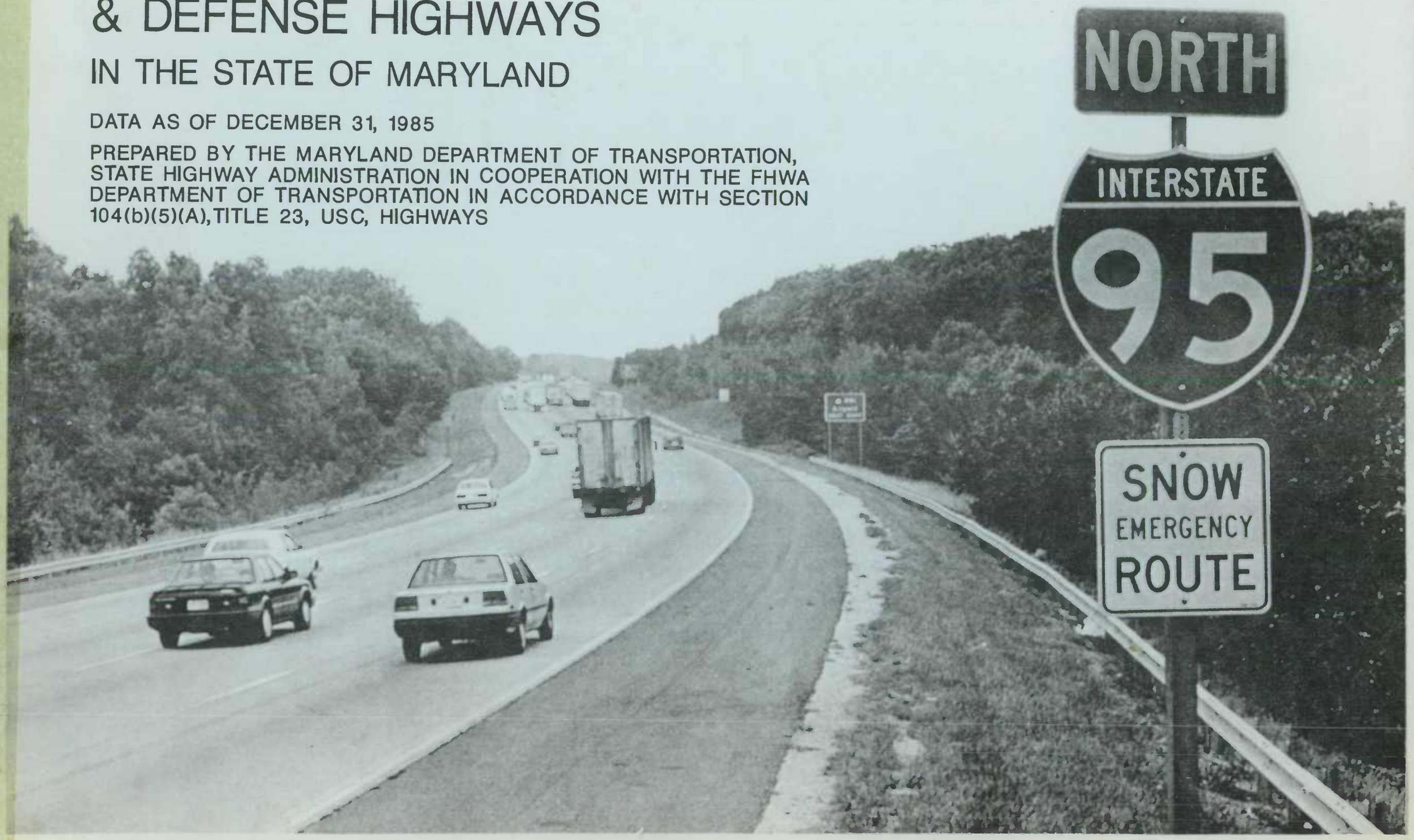

OCTOBER 1986

1987 ESTIMATE OF THE COST OF COMPLETING THE

NATIONAL SYSTEM OF INTERSTATE & DEFENSE HIGHWAYS

IN THE STATE OF MARYLAND

DATA AS OF DECEMBER 31, 1985

PREPARED BY THE MARYLAND DEPARTMENT OF TRANSPORTATION, STATE HIGHWAY ADMINISTRATION IN COOPERATION WITH THE FHWA DEPARTMENT OF TRANSPORTATION IN ACCORDANCE WITH SECTION 104(b)(5)(A), TITLE 23, USC, HIGHWAYS

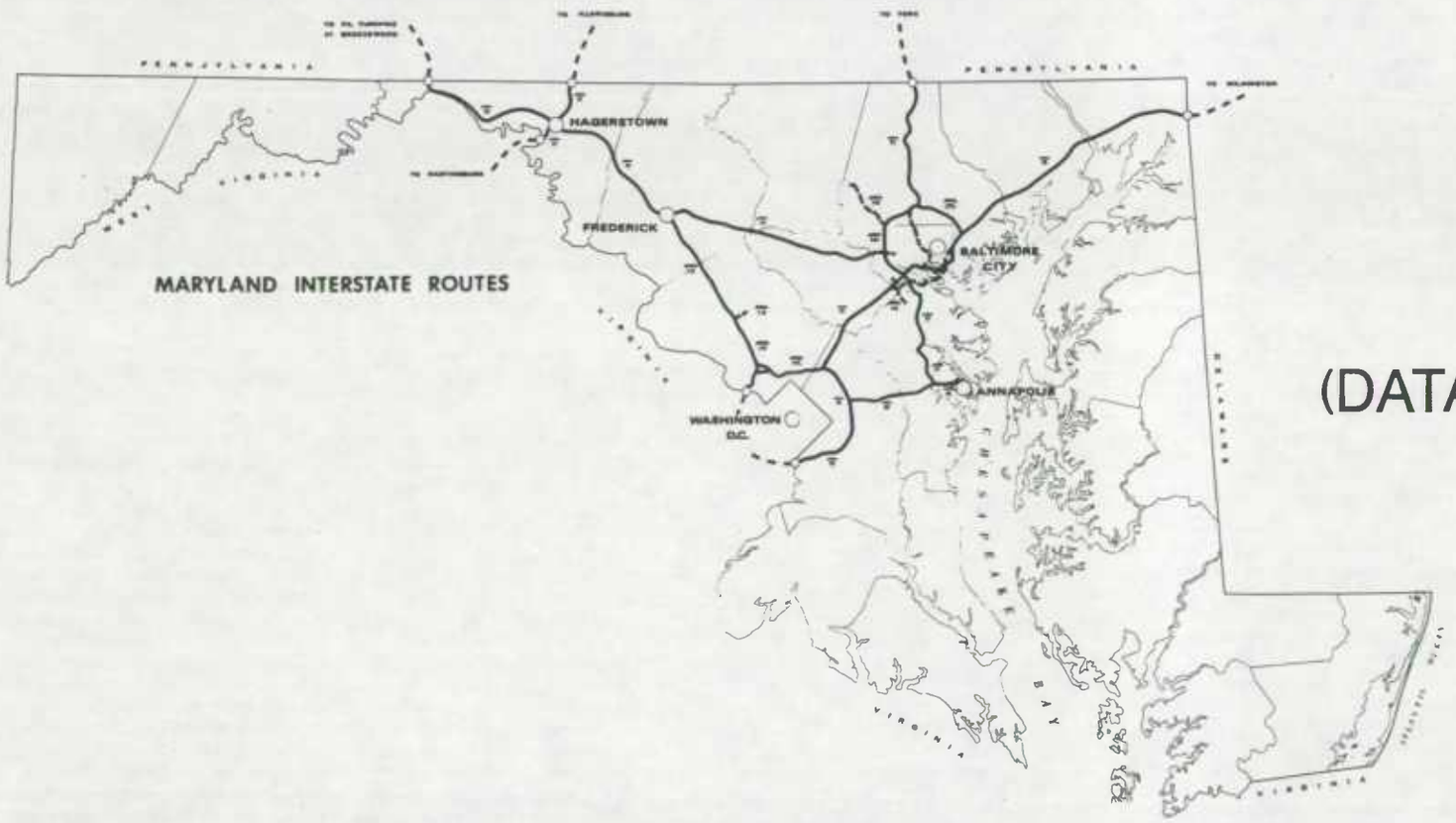

AUGUST 15, 1986

(DATA AS OF DECEMBER 31, 1985)

Hal Kassoff 10/20/86

Hal Kassoff Date
STATE HIGHWAY ADMINISTRATOR
STATE HIGHWAY ADMINISTRATION

Emil Elinsky 10/14/86

Emil Elinsky Date
DIVISION ADMINISTRATOR
FEDERAL HIGHWAY ADMINISTRATION

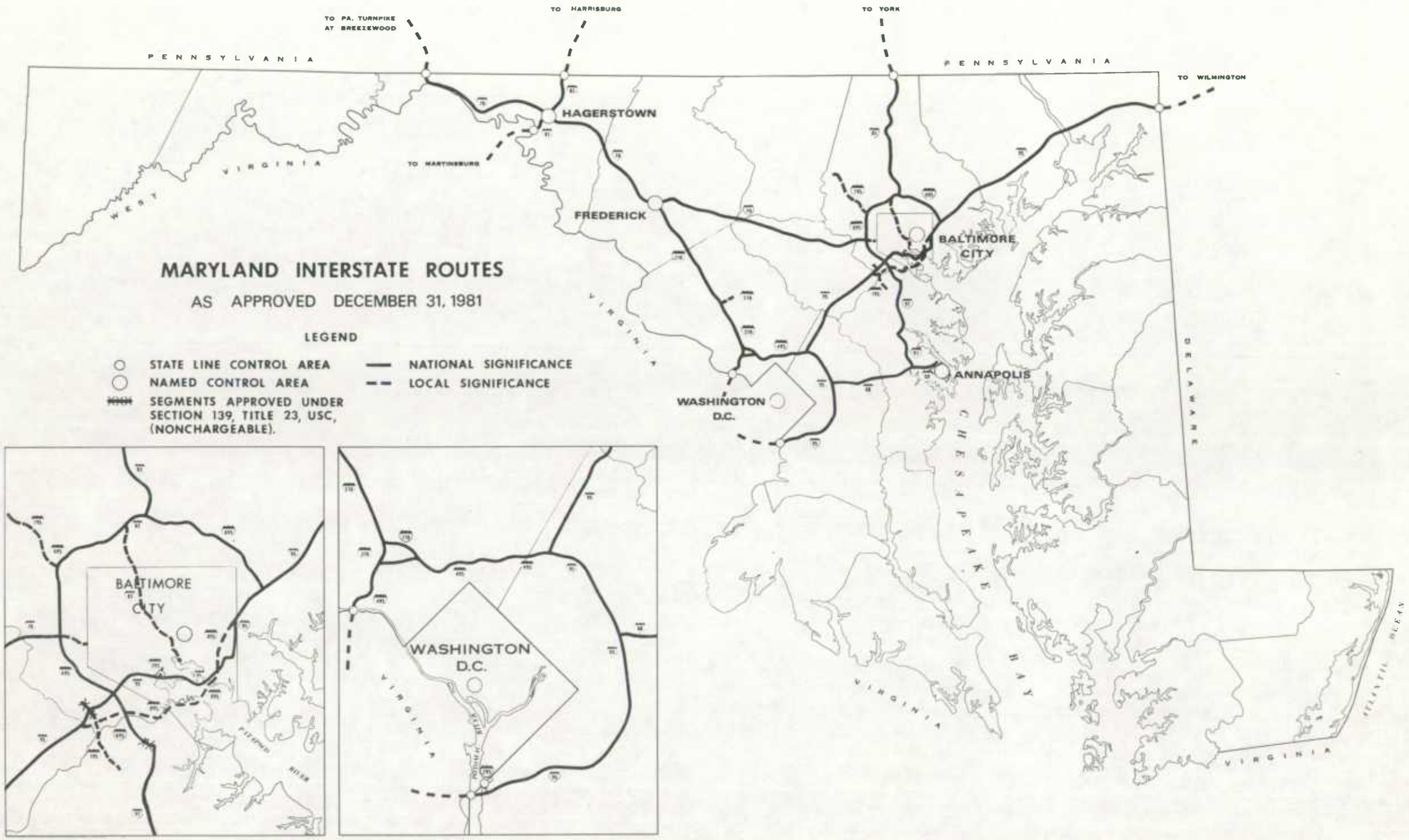
MARYLAND INTERSTATE ROUTES
AS APPROVED DECEMBER 31, 1981
LEGEND
STATE LINE CONTROL AREA
NAMED CONTROL AREA
SEGMENTS APPROVED UNDER SECTION 139, TITLE 23, USC, (NONCHARGEABLE).
NATIONAL SIGNIFICANCE
LOCAL SIGNIFICANCE
TO PA. TURNPIKE AT BREEZEWOOD
TO HARRISBURG
TO YORK
TO WILMINGTON
TO MARTINSBURG
PENNSYLVANIA
PENNSYLVANIA
WEST VIRGINIA
VIRGINIA
VIRGINIA
HAGERSTOWN
FREDERICK
BALTIMORE CITY
ANNAPOLIS
WASHINGTON D.C.
CHESAPEAKE BAY
DELAWARE
VIRGINIA
VIRGINIA
ATLANTIC OCEAN
BALTIMORE CITY
PATAPSCO RIVER
WASHINGTON D.C.
VIRGINIA

TABLE A
APPROVED INTERSTATE ROUTE DESCRIPTIONS
STATE OF MARYLAND

ROUTE NUMBER	ROUTE DESCRIPTION	LENGTH MILES ROUTE SIGNIFICANCE N	LENGTH MILES ROUTE SIGNIFICANCE L
68 ②	FROM A JUNCTION WITH I-95 EAST OF WASHINGTON EASTERLY VIA BOWIE TO A POINT NORTH OF ANNAPOLIS, STATE CAPITOL OF MARYLAND	20.09	
70	FROM THE MARYLAND-PENNSYLVANIA STATE LINE NEAR HANCOCK SOUTHEASTERLY VIA HAGERSTOWN AND FREDERICK TO WEST BALTIMORE CITY LINE	93.23 ①	
81	FROM THE MARYLAND-WEST VIRGINIA STATE LINE NEAR WILLIAMSPORT VIA HAGERSTOWN TO THE MARYLAND-PENNSYLVANIA STATE LINE NEAR STATE LINE PENNSYLVANIA	11.99	
83	FROM A JUNCTION WITH FAYETTE ST. IN BALTIMORE TO THE MARYLAND-PENNSYLVANIA STATE LINE SOUTH OF YORK, PENNSYLVANIA	24.04 ①	10.01
95 ②	FROM THE MARYLAND-VIRGINIA STATE LINE AT ALEXANDRIA, VIRGINIA VIA THE VICINITY OF OXON HILL, FORESTVILLE, LANHAM, GREENBELT, LAUREL, BALTIMORE AND ABERDEEN TO THE MARYLAND-DELAWARE STATE LINE EAST OF ELKTON	108.88	
97 ②	FROM A JUNCTION WITH I-6B JUST WEST OF MD 178 AND ANNAPOLIS TO A JUNCTION WITH I-695 SOUTH OF BALTIMORE CITY	17.57	
195 ②	FROM A CONNECTION WITH I-95 NEAR THE BALTIMORE-HOWARD COUNTY LINE SOUTHERLY VIA METROPOLITAN BOULEVARD TO THE VICINITY OF THE BALTIMORE-WASHINGTON INTERNATIONAL AIRPORT		4.93
270 ②	FROM A JUNCTION WITH I-70 NEAR FREDERICK SOUTHEASTERLY VIA ROCKVILLE WITH A WYE (Y) CONNECTION TO I-495 FROM A POINT WHERE THE WYE (Y) CONNECTION BEGINS JUST SOUTH OF TUCKERMAN LANE ONE LEG EXTENDS SOUTHERLY TO I-495 NEAR BRADLEY BOULEVARD AND THE OTHER EXTENDS SOUTHEASTERLY TO I-495 AT POOKS HILL INTER-CHANGE	34.52	
295	FROM A JUNCTION WITH I-95 NEAR THE WOODROW WILSON MEMORIAL BRIDGE NORTHERLY TO THE MARYLAND-DISTRICT OF COLUMBIA LINE		0.78
370 ②	FROM A CONNECTION WITH I-270 NORTH OF ROCKVILLE EASTERLY VIA THE OUTER BELTWAY TO THE VICINITY OF THE SHADY GROVE RAPID TRANSIT STATION		2.67
395 ②	FROM A CONNECTION WITH FAI ROUTE 95 NEAR ITS JUNCTION WITH RUSSELL STREET NORTHERLY TO THE VICINITY OF HAMBURG STREET		0.72
495 ②	FROM THE MARYLAND-VIRGINIA STATE LINE NEAR CABIN JOHN NORHTERLY THEN EASTERLY TO A JUNCTION WITH I-95 NORTH OF COLLEGE PARK	15.26	
695	BALTIMORE BELTWAY-FROM THE JUNCTION WITH I-97 SOUTH OF BALTIMORE CITY CLOCKWISE AROUND BALTIMORE TO A POINT ON I-83 NEAR FALLS ROAD AND FROM A POINT ON I-83 NEAR TOWSON TO A JUNCTION WITH I-95 EAST OF BALTIMORE	30.78	
795 ②	FROM A JUNCTION WITH FAI ROUTE 695 NORTHWEST OF BALTIMORE NORTHWESTERLY TO A POINT NEAR DOLFIELD ROAD		9.52
895	HARBOR TUNNEL - FROM A JUNCTION WITH I-95 SOUTH OF BALTIMORE VIA THE HARBOR TUNNEL TO A JUNCTION		15.00
TOTAL		356.36	43.63

① FROM I-695 TO MARYLAND-PENNSYLVANIA STATE LINE ② ROUTES INCLUDED IN 1987 I.C.E. - OTHERS ARE CONSIDERED ZERO FAI COST

AUTHORIZED
CODE ① APPROVED 42,000
CODE ② HOWARD KRAMER

③ CODE - EVERTI NON Chargable

TYPICAL CROSS-SECTION OF IMPROVEMENT

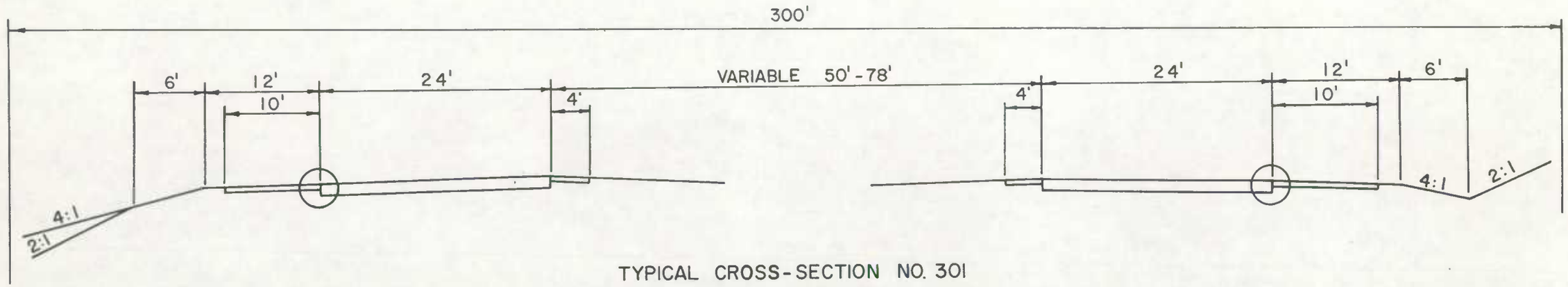

TYPICAL CROSS-SECTION NO. 301
TO BE USED ON ROUTE I-70; I-270; I-81; I-895

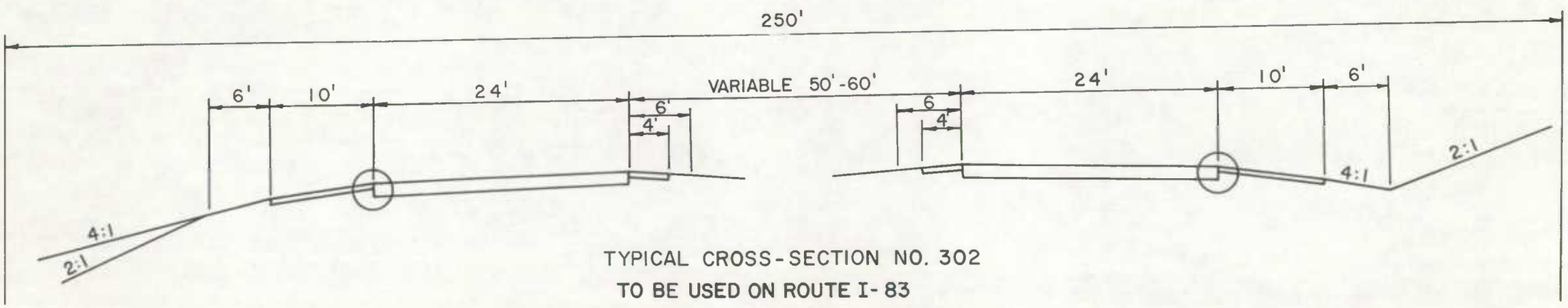

TYPICAL CROSS-SECTION NO. 302
TO BE USED ON ROUTE I-83

NOT TO SCALE

TYPICAL CROSS-SECTION OF IMPROVEMENT

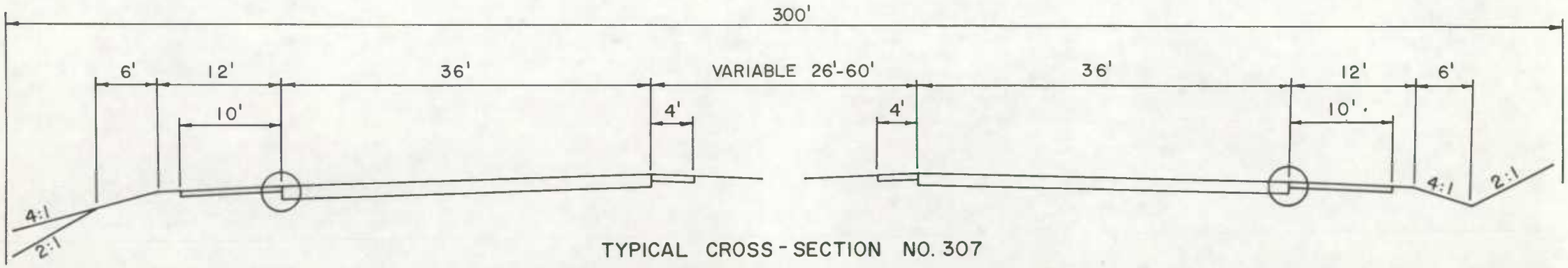

TYPICAL CROSS-SECTION NO. 307

TO BE USED ON ROUTE: I-70 ; I-95 ; I-495; I-695; I-270

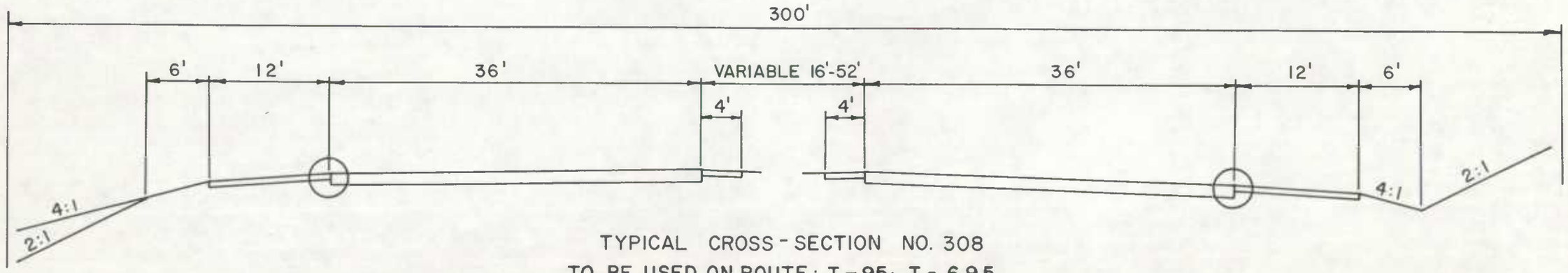

TYPICAL CROSS-SECTION NO. 308

TO BE USED ON ROUTE: I-95; I-695

NOT TO SCALE

TYPICAL CROSS-SECTION OF IMPROVEMENT

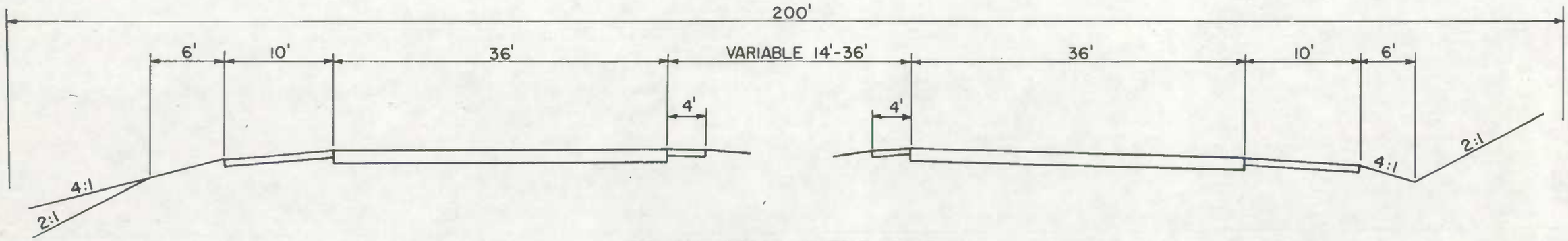

TYPICAL CROSS-SECTION NO. 309
TO BE USED ON ROUTE: I-83; I-495

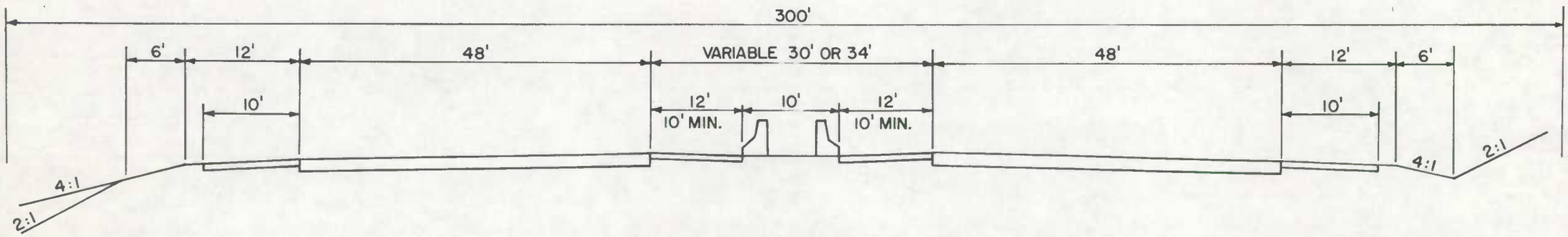

TYPICAL CROSS-SECTION NO. 310
TO BE USED ON ROUTE: I-70 ; I-695

NOTE-
ON I-695 THE MEDIAN WIDTH VARIES FROM 12' TO 26' AND BEAM TYPE MEDIAN BARRIER IS PROVIDED.

NOT TO SCALE

TYPICAL CROSS-SECTION OF IMPROVEMENT

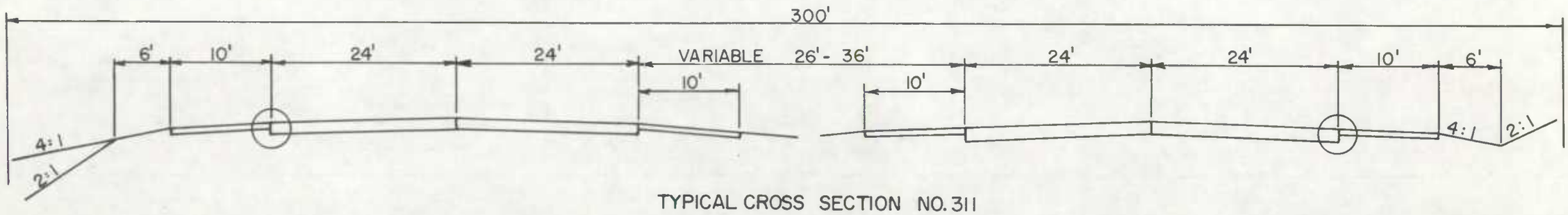

TYPICAL CROSS SECTION NO. 311
TO BE USED ON ROUTE: I-83

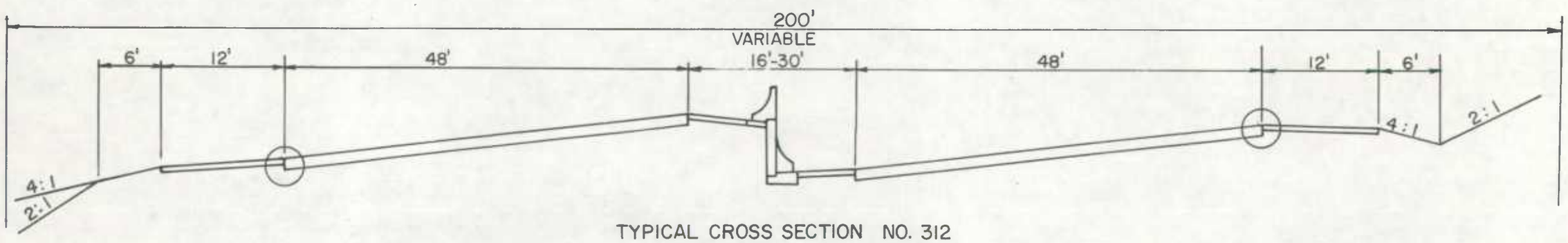

TYPICAL CROSS SECTION NO. 312
TO BE USED ON ROUTE: I-495

NOT TO SCALE

TYPICAL CROSS-SECTION OF IMPROVEMENT

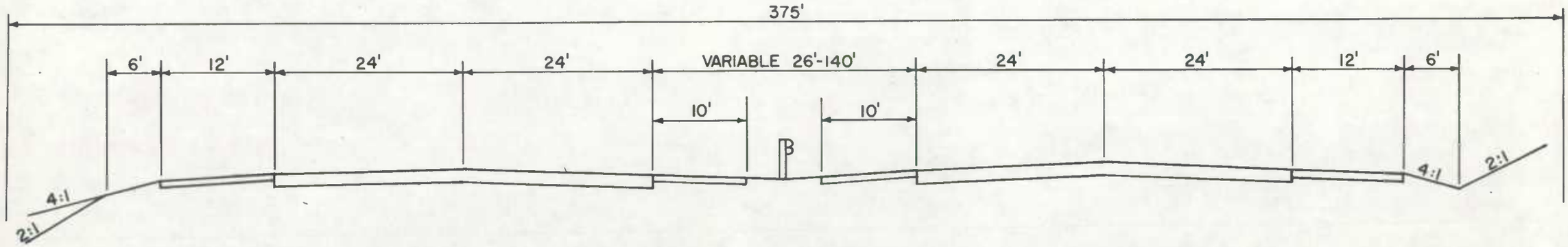

TYPICAL CROSS-SECTION NO. 313
TO BE USED ON ROUTE I-95

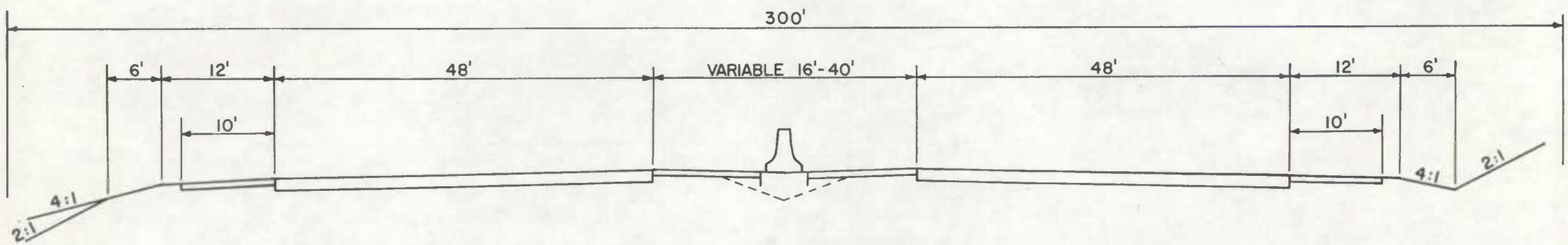

TYPICAL CROSS-SECTION NO. 314
TO BE USED ON ROUTE: I-95; I-495; I-695

NOTE: I-695 HAS CONSTANT MEDIAN OF 30'.

NOT TO SCALE

TYPICAL CROSS-SECTION OF IMPROVEMENT

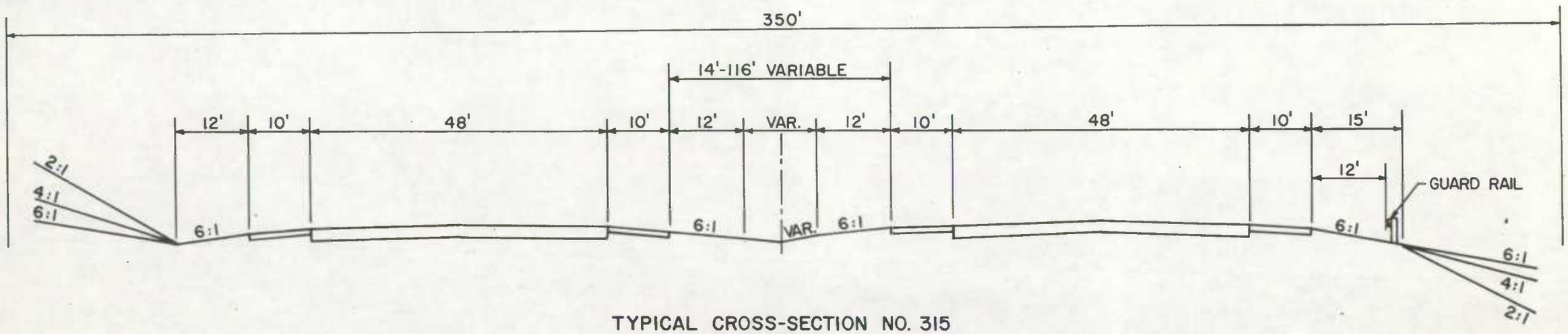

TYPICAL CROSS-SECTION NO. 315
TO BE USED ON ROUTE: I-95

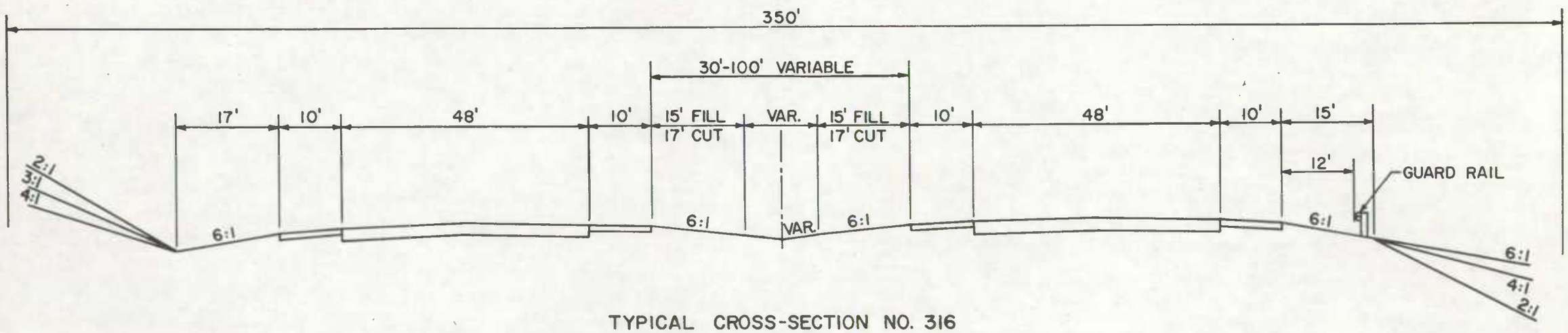

TYPICAL CROSS-SECTION NO. 316
TO BE USED ON ROUTE: I-95

NOT TO SCALE

TYPICAL CROSS-SECTION OF IMPROVEMENT

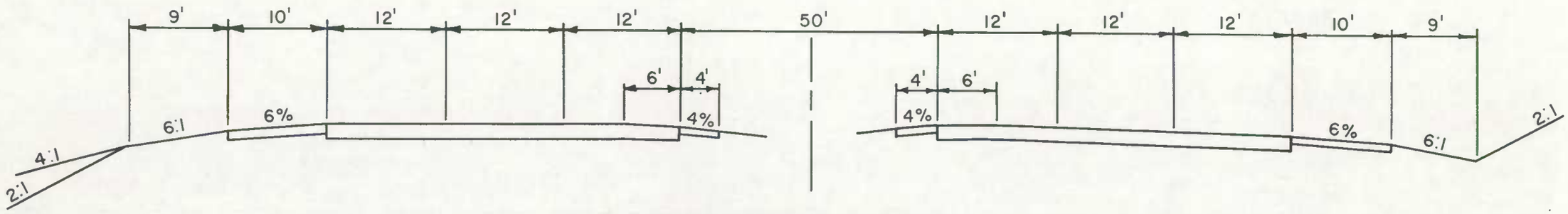

TYPICAL CROSS-SECTION NO. 323

TO BE USED ON I-83

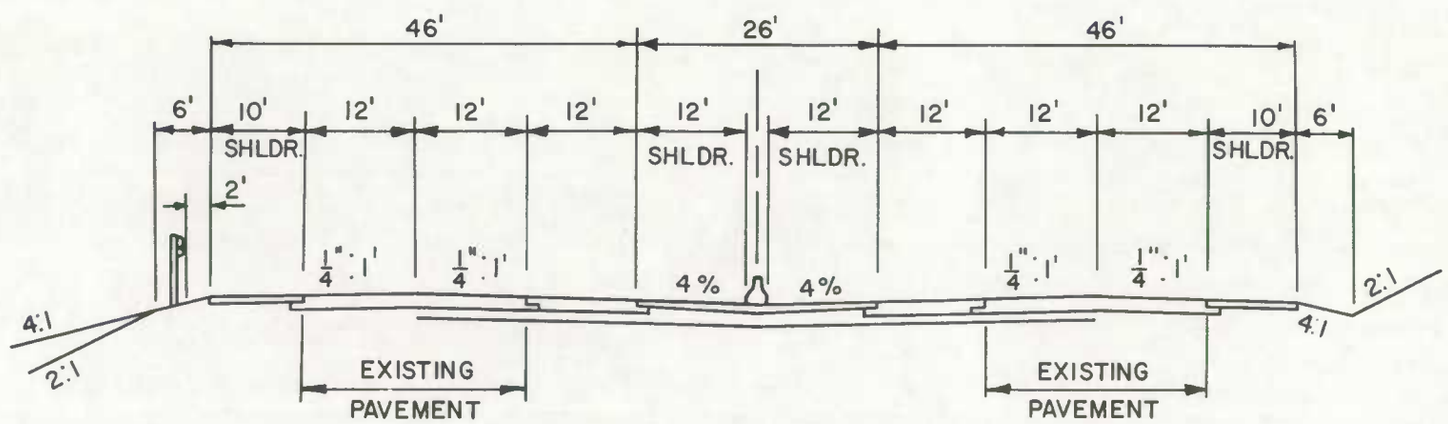

TYPICAL CROSS-SECTION NO. 324

TO BE USED ON ROUTE I-270

NOT TO SCALE

TYPICAL CROSS-SECTION OF IMPROVEMENTS

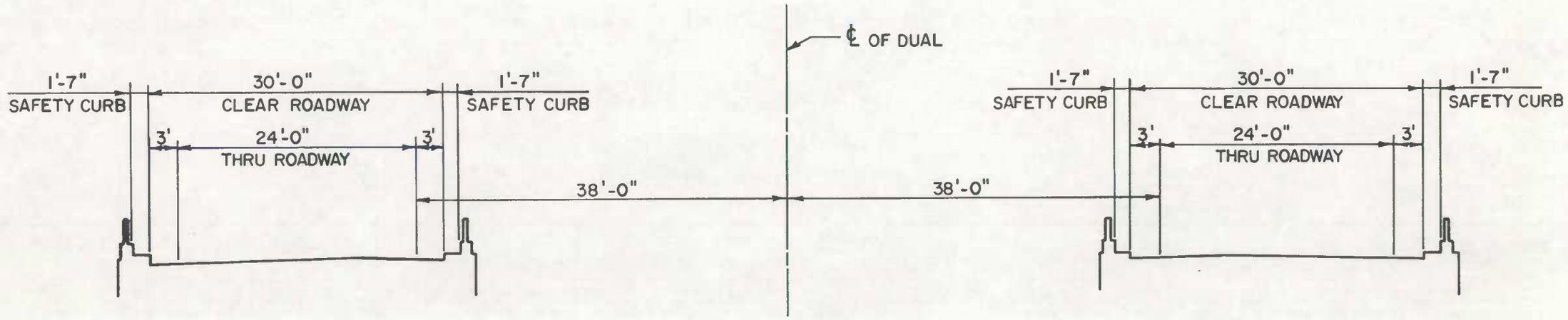

SECTION NO. 329 CROSS SECTION FOR 1181' BRIDGE ON ROUTE : 81 OVER POTOMAC RIVER

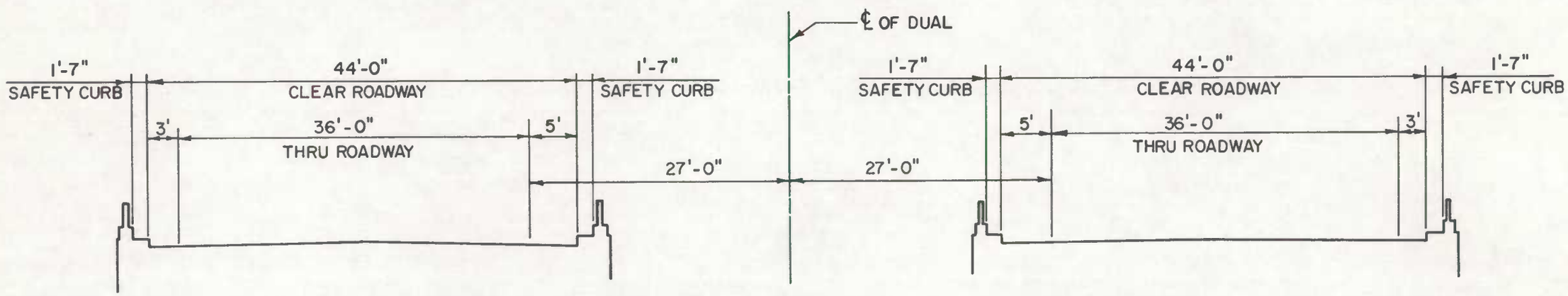

SECTION NO. 330 CROSS SECTION FOR 1443' BRIDGE ON ROUTE : 495 OVER POTOMAC RIVER AT CABIN JOHN

TYPICAL CROSS-SECTION OF IMPROVEMENTS

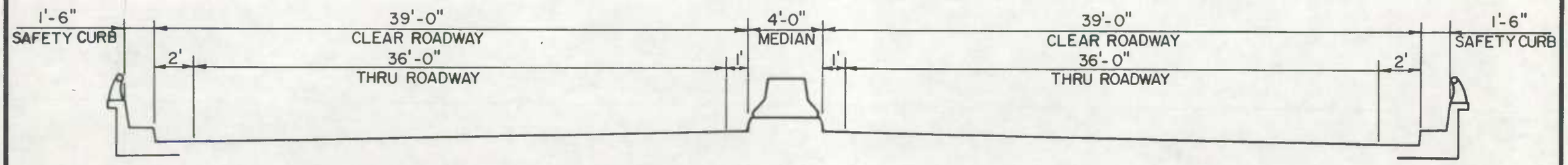

SECTION NO. 331 CROSS-SECTION FOR 5061' BRIDGE ON ROUTE: 95 OVER SUSQUEHANNA RIVER

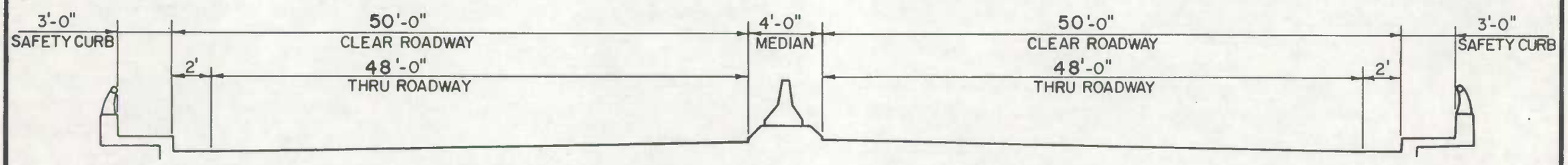

SECTION NO. 332 CROSS-SECTION FOR 5905' BRIDGE ON ROUTE: .95 OVER POTOMAC RIVER AT JONES POINT

TYPICAL CROSS-SECTION OF IMPROVEMENT

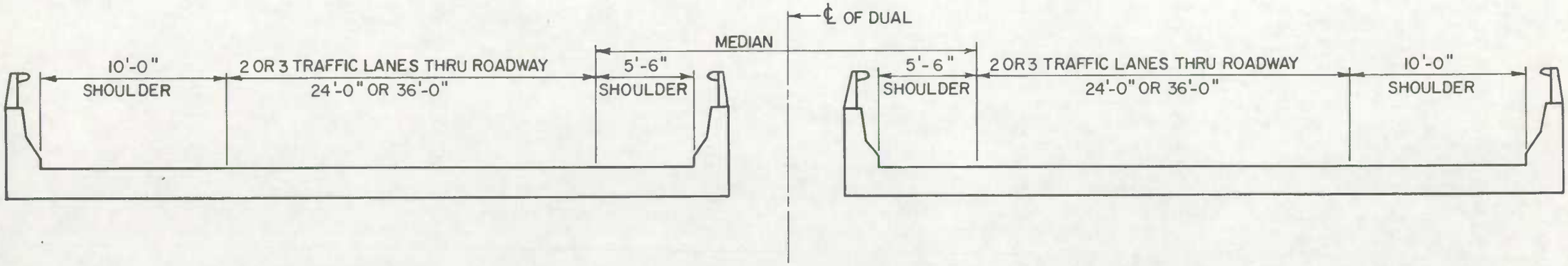

SECTION NO. 334: TYPICAL CROSS-SECTION FOR DUAL INTERSTATE ROUTE BRIDGES - 4 OR 6 LANES TOTAL (NEW OR AFTER WIDENING)

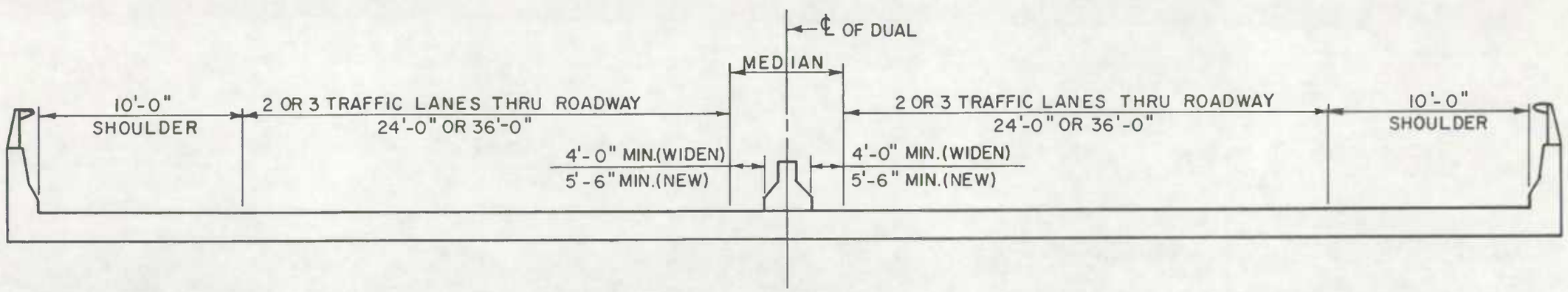

SECTION NO. 335: TYPICAL CROSS-SECTION FOR SINGLE INTERSTATE ROUTE BRIDGES - 4 OR 6 LANES TOTAL (NEW OR AFTER WIDENING)

NOTES: 1. FOR EACH TURNING MOVEMENT ON BRIDGES, ADD 12' LANE AND REPLACE SHOULDER WITH 10' CLEARANCE.
2. VERTICAL CLEARANCE: 16'-9" MINIMUM CLEARANCE OVER STATE & INTERSTATE ROUTES.
15'-0" MINIMUM CLEARANCE OVER COUNTY & SECONDARY ROUTES.

TYPICAL CROSS-SECTION OF IMPROVEMENT

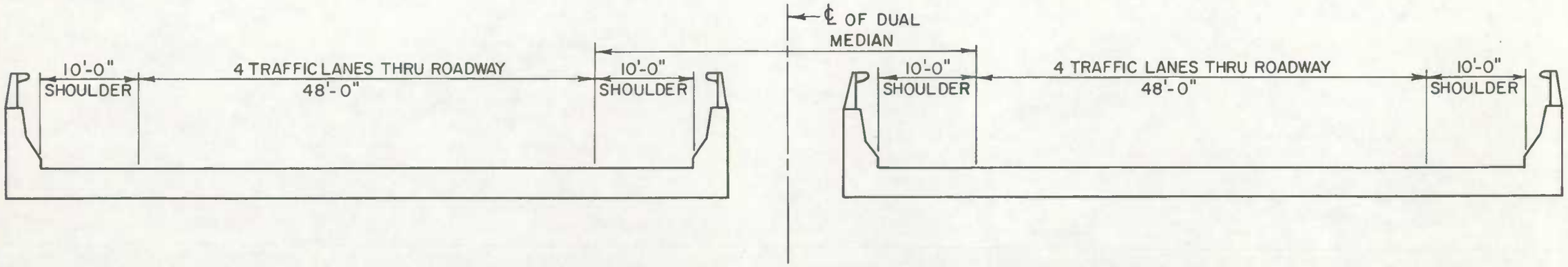

SECTION NO. 336: TYPICAL CROSS - SECTION FOR DUAL INTERSTATE BRIDGES EIGHT OR MORE LANES TOTAL

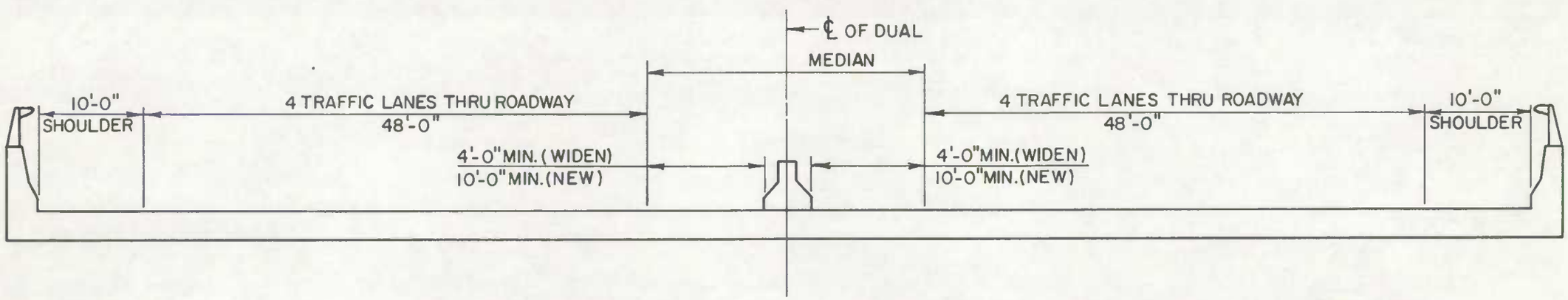

SECTION NO. 337: TYPICAL CROSS - SECTION FOR SINGLE INTERSTATE ROUTE BRIDGE EIGHT OR MORE LANES TOTAL

NOTES: 1. FOR EACH TURNING MOVEMENT ON BRIDGES ADD 12' LANE AND REPLACE SHOULDER WITH 10' CLEARANCE.

2. VERTICAL CLEARANCE: 16'-9" MINIMUM CLEARANCE OVER STATE & INTERSTATE ROUTES.

15'-0" MINIMUM CLEARANCE OVER COUNTY & SECONDARY ROUTES.

TYPICAL CROSS-SECTION OF IMPROVEMENT

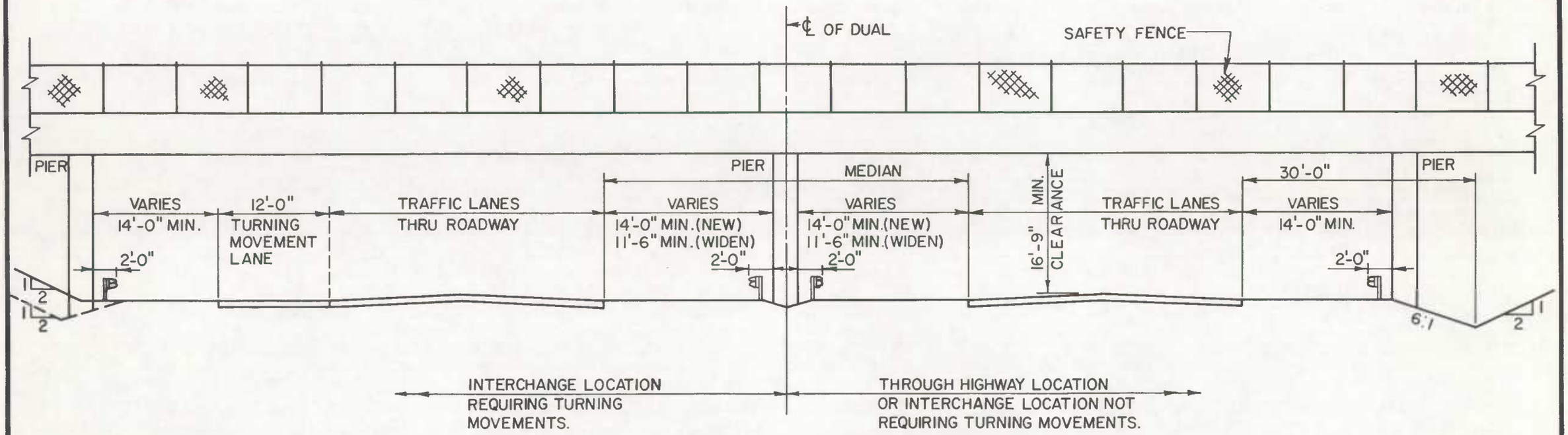

SECTION NO. 338: TYPICAL ELEVATION FOR BRIDGE OVER INTERSTATE ROUTE

NOTE: USE GUARD RAIL WHERE APPLICABLE
GUARD RAIL POST SPACING TO BE 3'-1½" WHEN
HORIZONTAL CLEARANCE IS LESS THAN 4'-0".

TYPICAL CROSS-SECTION OF IMPROVEMENT

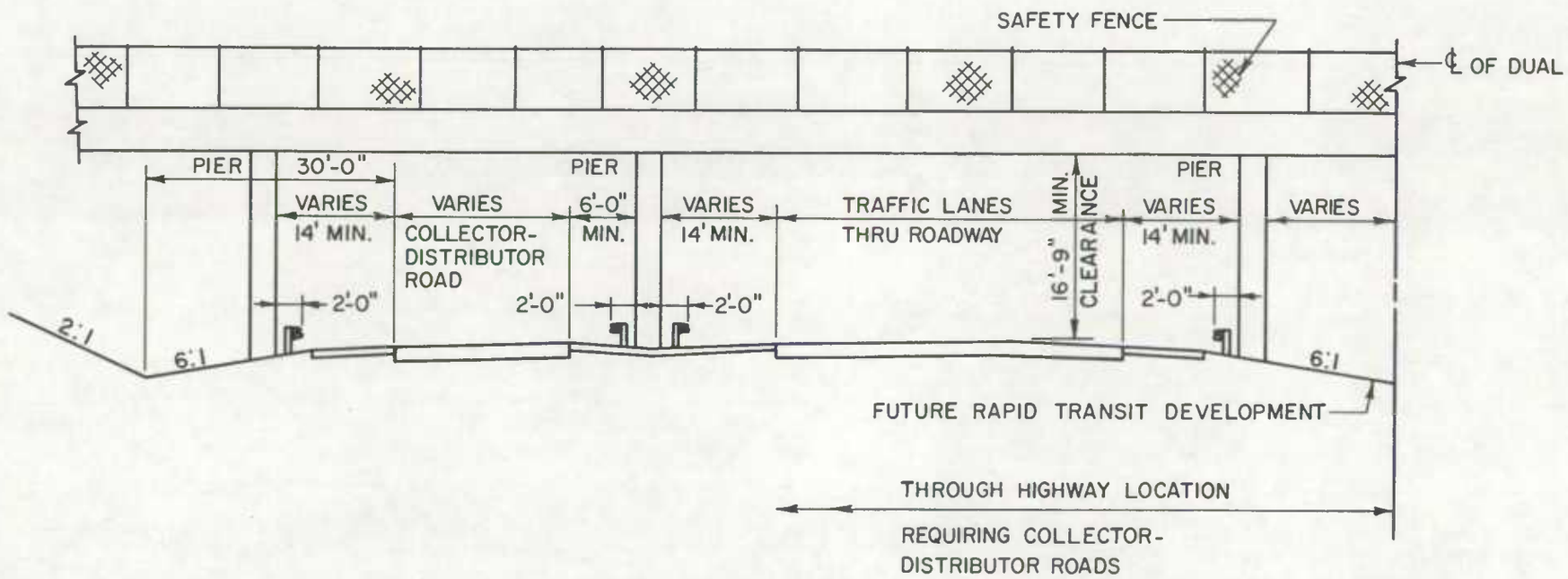

SECTION NO. 339 : TYPICAL ELEVATION FOR BRIDGE OVER INTERSTATE

NOTE : USE GUARD RAIL WHERE APPLICABLE.
GUARD RAIL POST SPACING TO BE 3'-1½" WHEN HORIZONTAL CLEARANCE IS LESS THAN 4'-0".

STATE OF MARYLAND
CITY OF BALTIMORE

TYPICAL CROSS-SECTION OF IMPROVEMENT

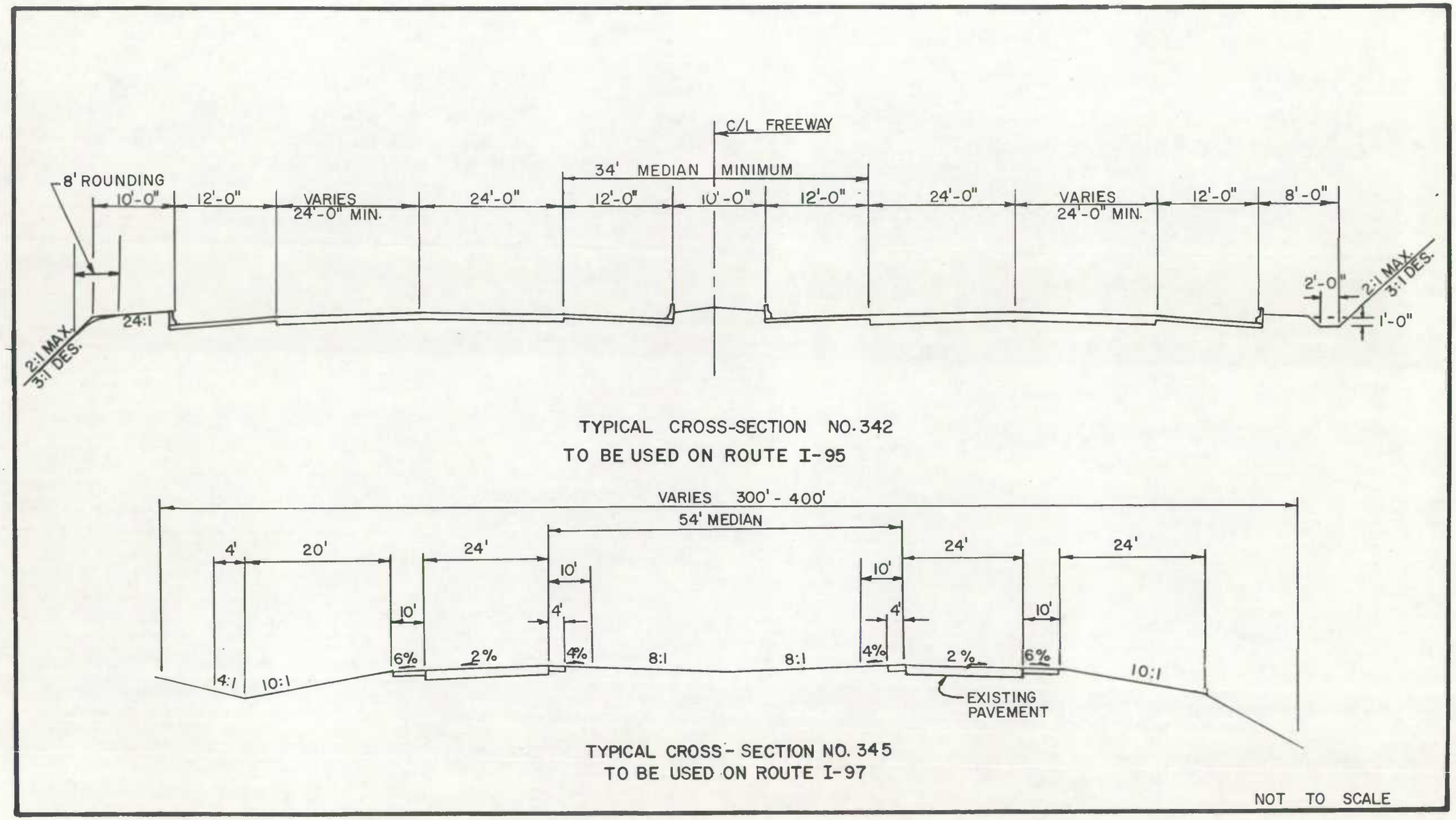

STATE OF MARYLAND
CITY OF BALTIMORE

TYPICAL CROSS-SECTION OF IMPROVEMENT

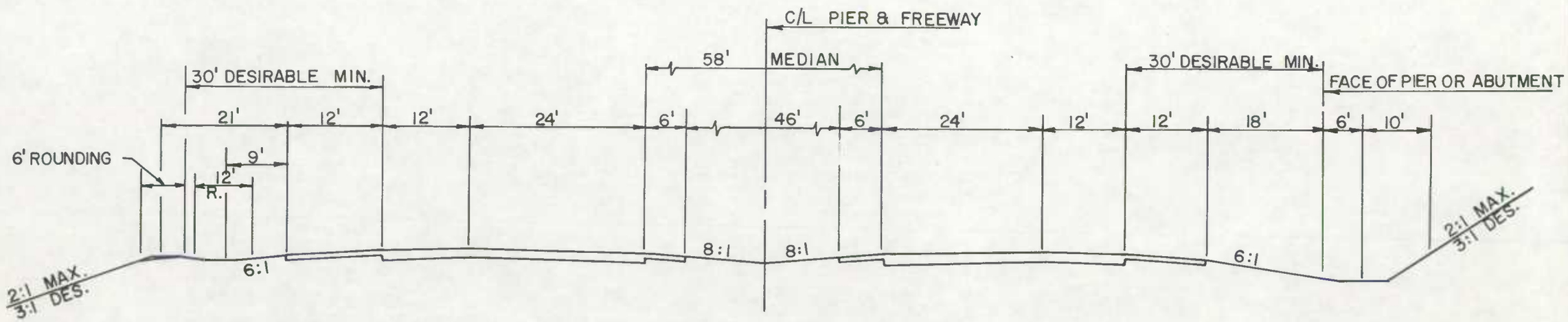

TYPICAL CROSS-SECTION NO.343
TO BE USED ON ROUTE I-95

NOT TO SCALE

STATE OF MARYLAND
CITY OF BALTIMORE

TYPICAL CROSS-SECTION OF IMPROVEMENT

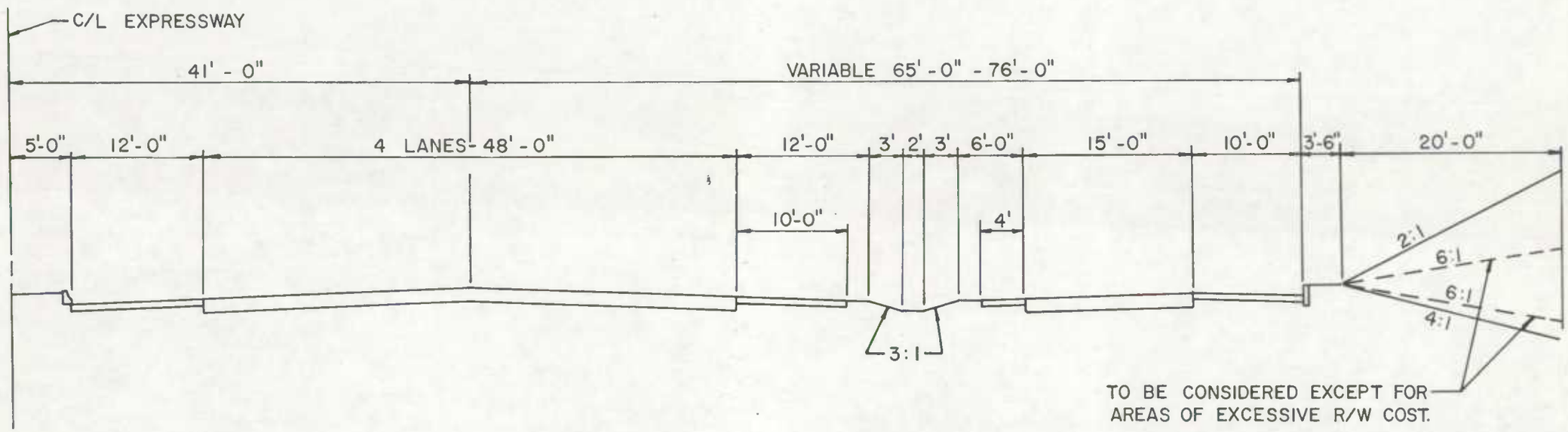

TYPICAL CROSS-SECTION NO. 344
TO BE USED ON ROUTE I-95

NOT TO SCALE

TYPICAL CROSS-SECTION OF IMPROVEMENT

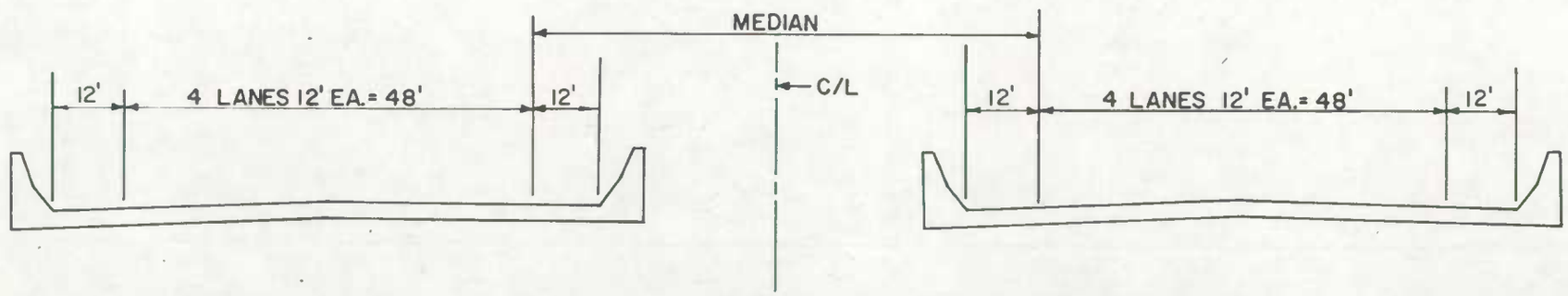

CROSS-SECTION NO. 349 FOR DUAL BRIDGES
TO BE USED ON ROUTE I- 95

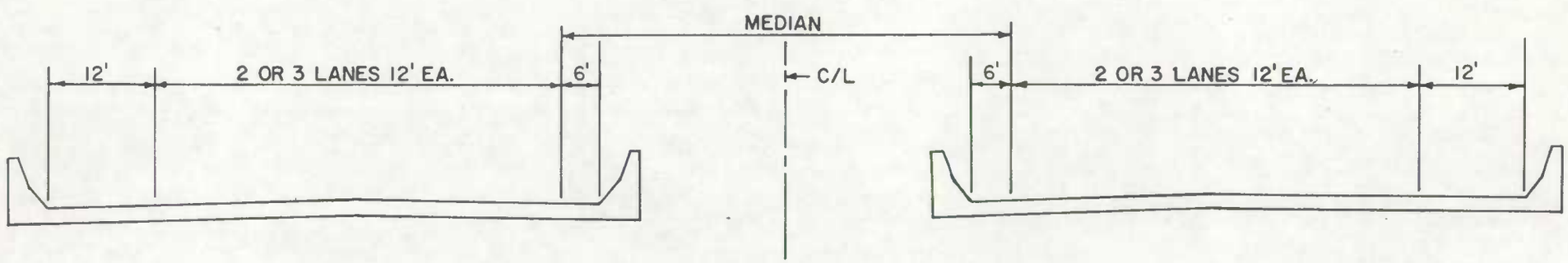

CROSS-SECTION NO. 350 FOR DUAL BRIDGES
TO BE USED ON ROUTE I-395

NOT TO SCALE

TYPICAL CROSS-SECTION OF IMPROVEMENT

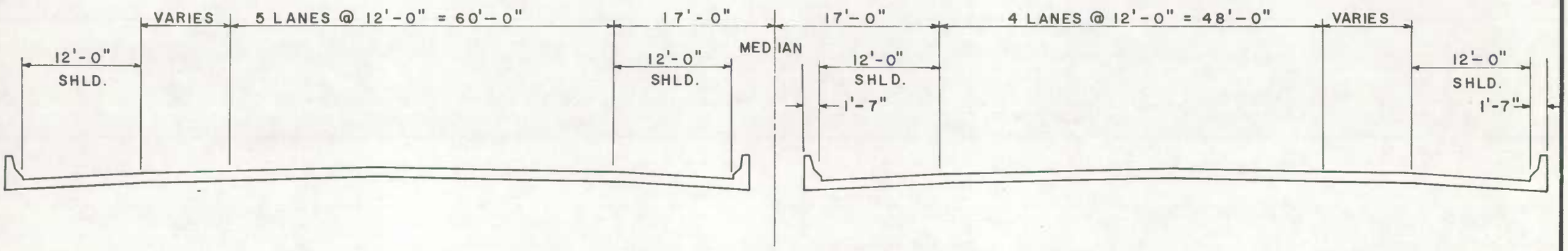

CROSS-SECTION FOR DUAL BRIDGES
TYPICAL CROSS-SECTION NO. 351
TO BE USED ON ROUTE I-95

NOT TO SCALE

TYPICAL CROSS - SECTION OF IMPROVEMENT

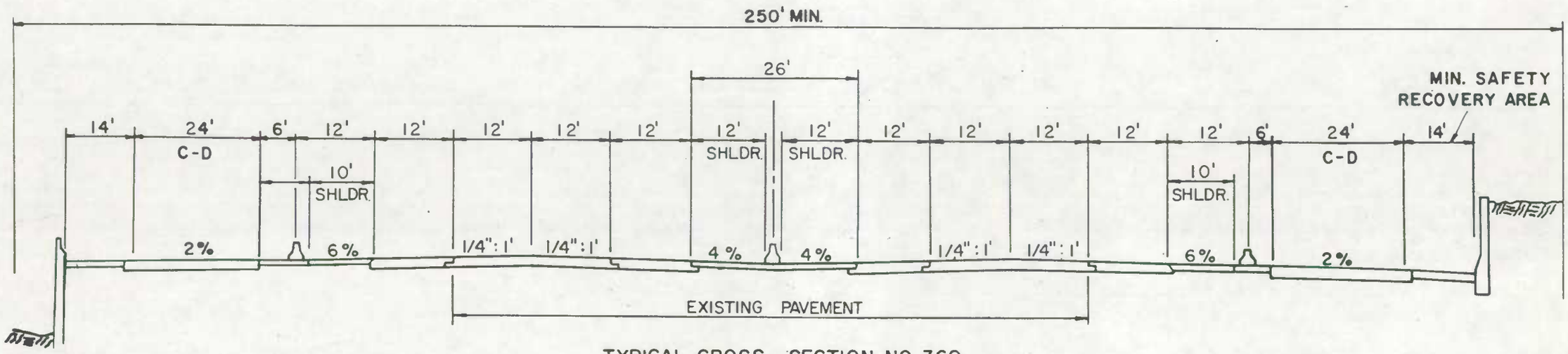

TYPICAL CROSS - SECTION NO. 360
TO BE USED ON ROUTE I-270

NOT TO SCALE

TYPICAL CROSS-SECTION OF IMPROVEMENT

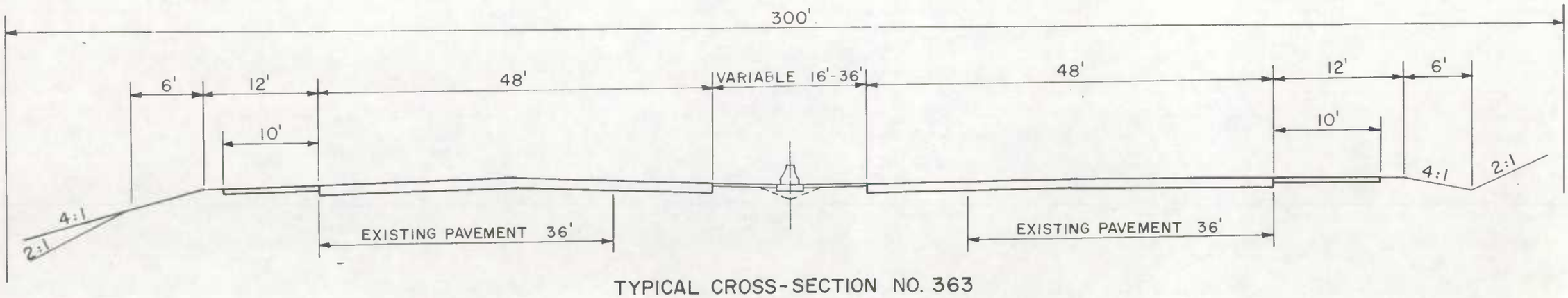

TYPICAL CROSS-SECTION NO. 363
TO BE USED ON ROUTE I-495

NOT TO SCALE

TYPICAL CROSS-SECTION OF IMPROVEMENT

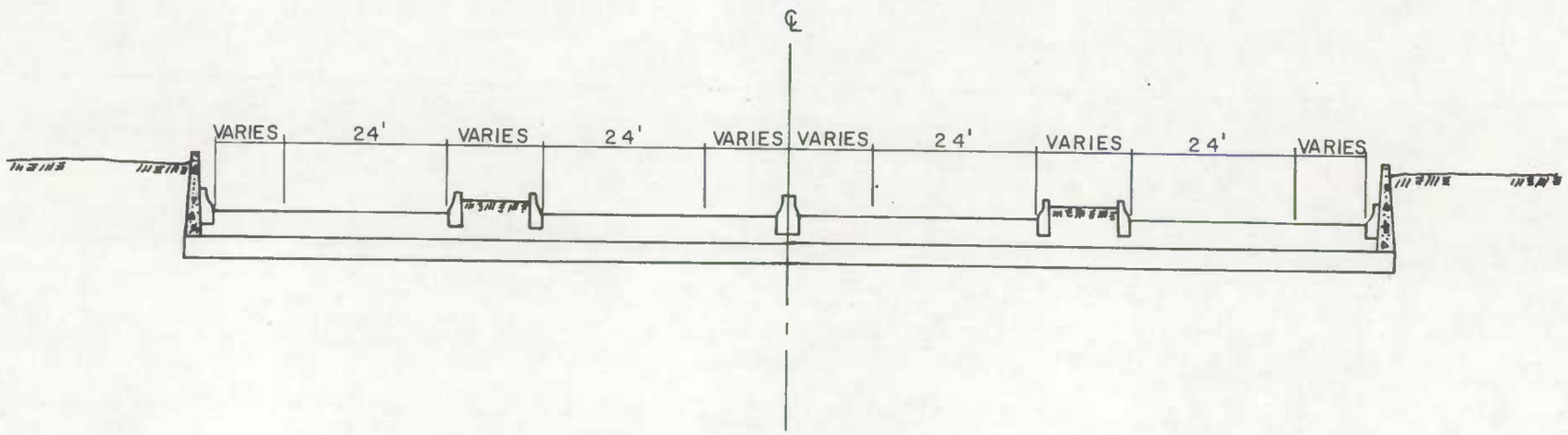

TYPICAL CROSS-SECTION NO. 364
TO BE USED ON ROUTE I-95

SCALE : 1"=30'

STATE OF MARYLAND
CITY OF BALTIMORE

TYPICAL CROSS-SECTION OF IMPROVEMENT

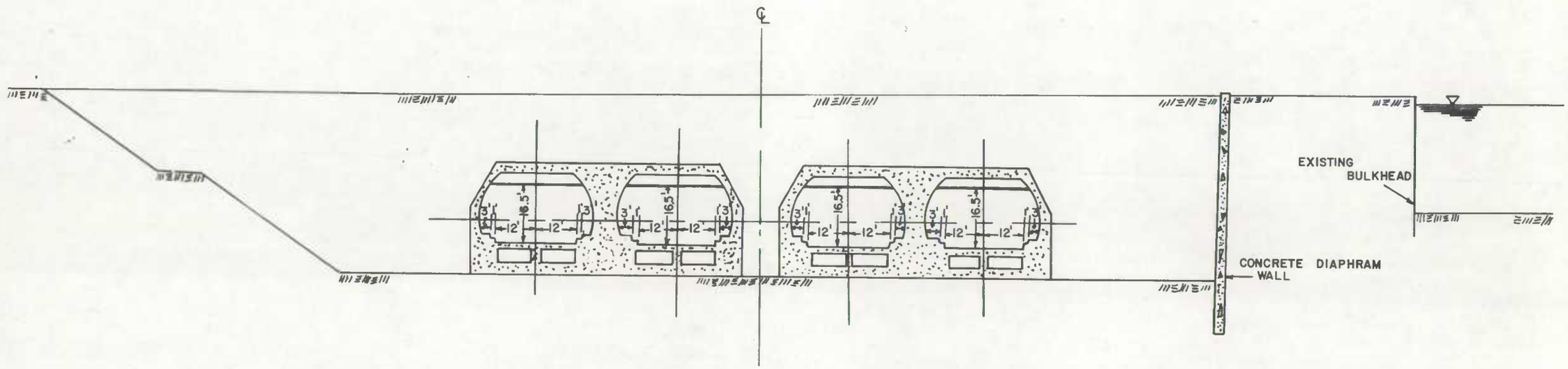

TYPICAL CROSS-SECTION NO. 366
TO BE USED ON ROUTE I-95

SCALE : 1"=30'

STATE OF MARYLAND
CITY OF BALTIMORE

TYPICAL CROSS-SECTION OF IMPROVEMENT

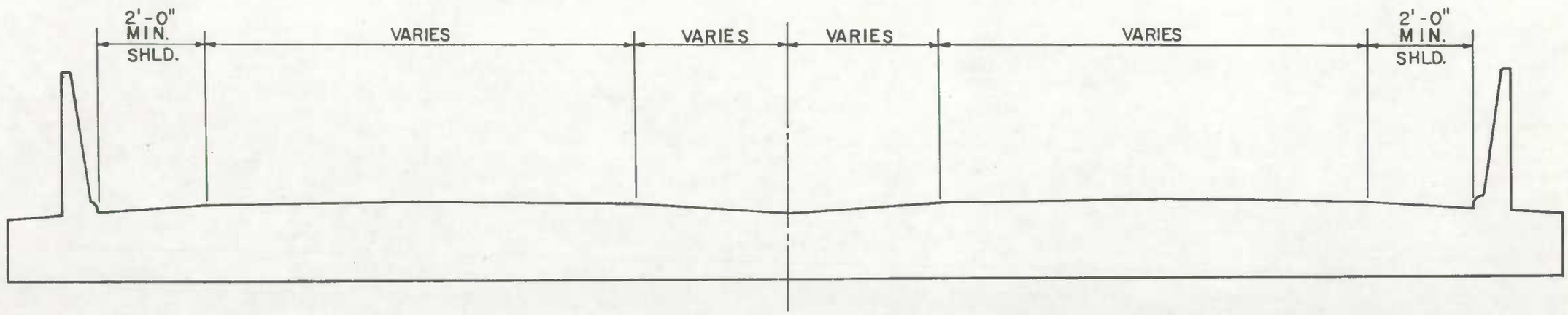

MAINLINE SECTION IN CUT

TO BE USED ON I-95

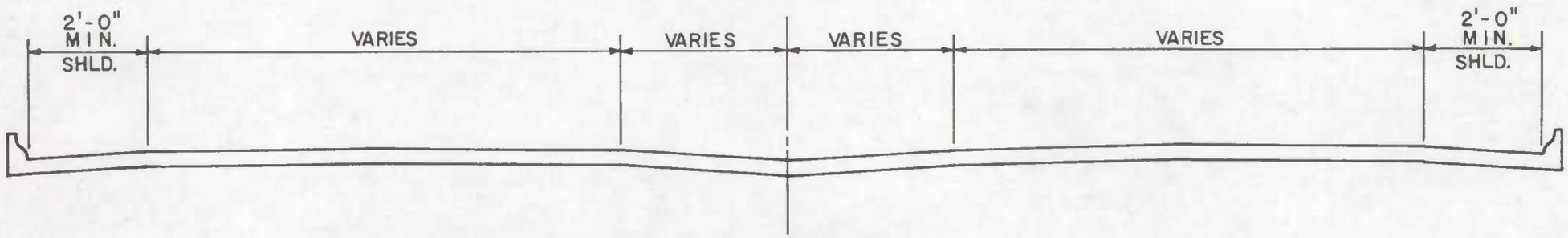

MAINLINE SECTION IN FILL

TO BE USED ON I-95

TYPICAL CROSS-SECTION NO. 367

NOT TO SCALE

TYPICAL CROSS-SECTION OF IMPROVEMENT

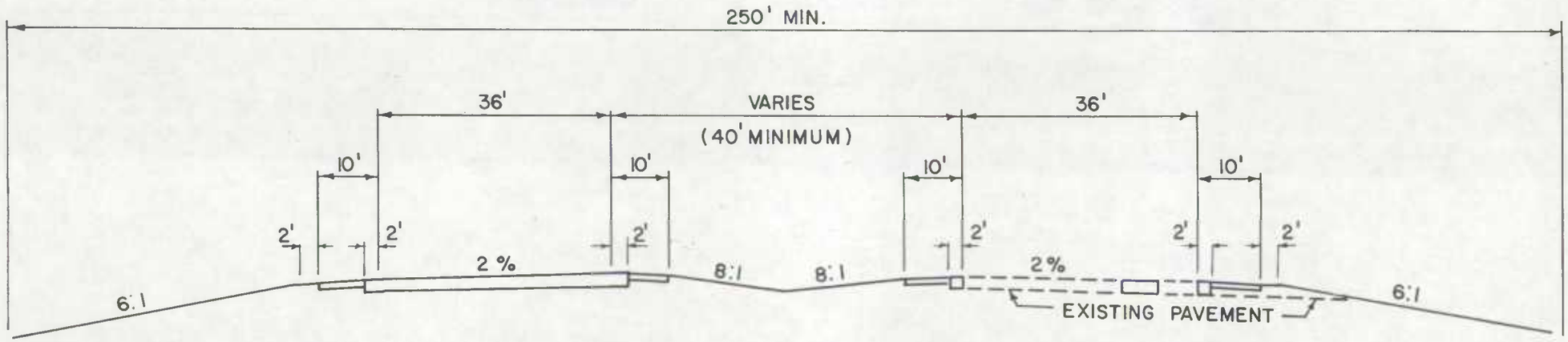

TYPICAL CROSS - SECTION NO. 375

TO BE USED ON ROUTE I-195

NOT TO SCALE

TYPICAL CROSS-SECTION OF IMPROVEMENT

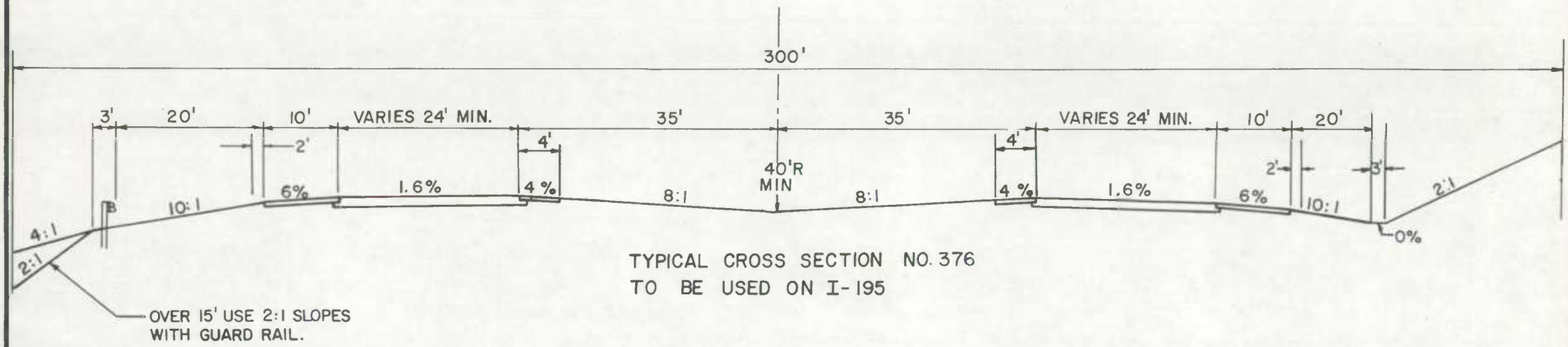

TYPICAL CROSS SECTION NO. 376
TO BE USED ON I-195

NOT TO SCALE

TYPICAL CROSS-SECTION OF IMPROVEMENT

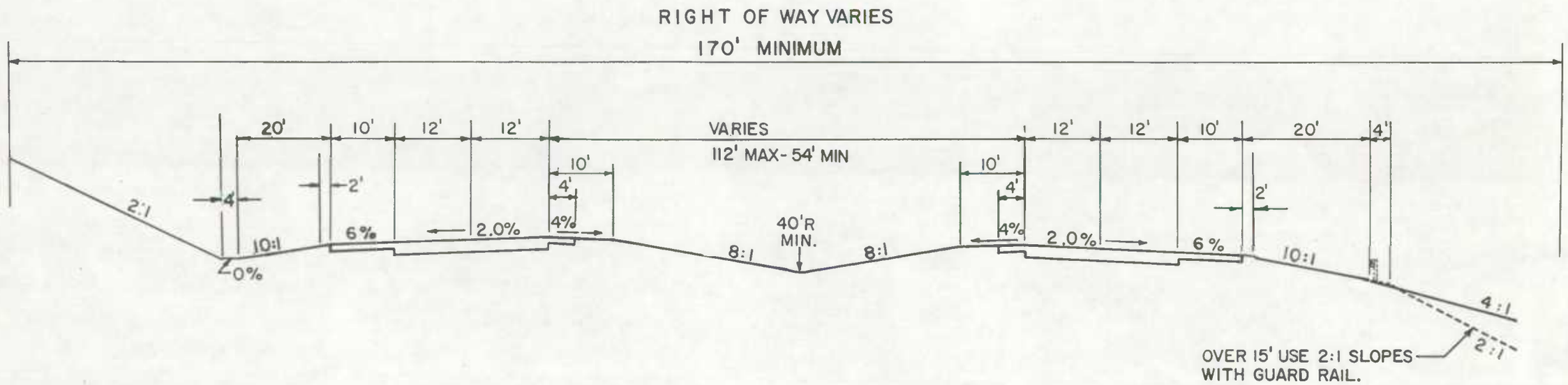

TYPICAL CROSS-SECTION NO. 379
TO BE USED ON ROUTE I-370

NOT TO SCALE

TYPICAL CROSS - SECTION OF IMPROVEMENT

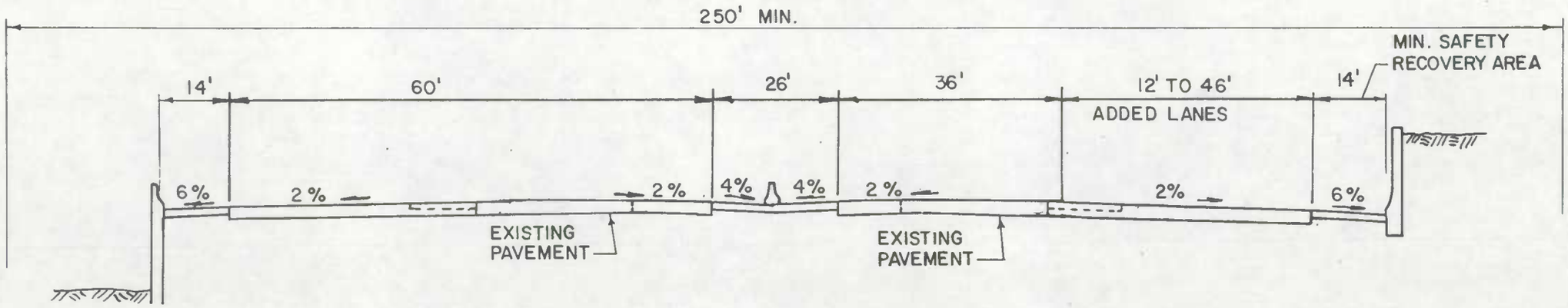

TYPICAL CROSS - SECTION NO. 382
TO BE USED ON ROUTE I-68

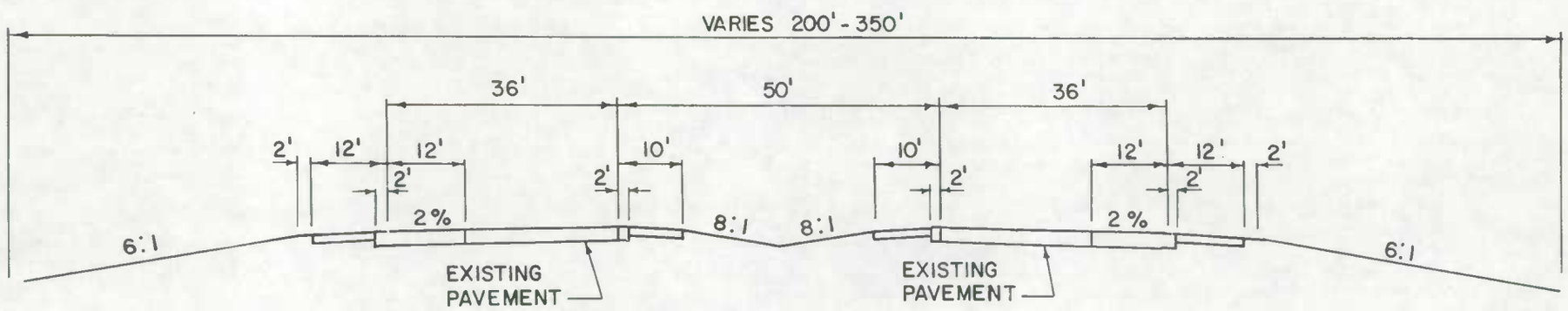

TYPICAL CROSS - SECTION NO. 383
TO BE USED ON ROUTE I-68

NOT TO SCALE

TYPICAL CROSS-SECTION OF IMPROVEMENT

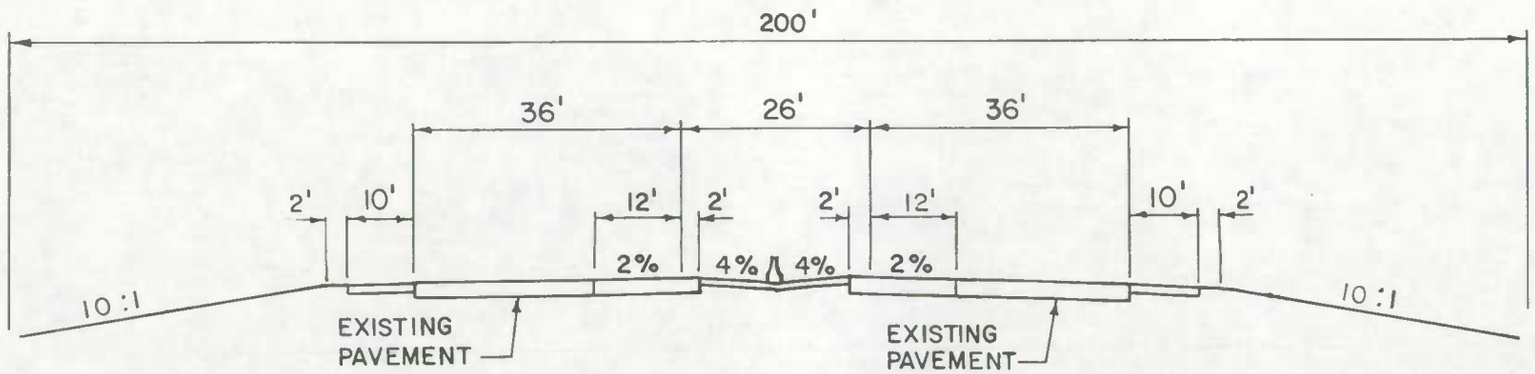

TYPICAL CROSS - SECTION NO. 384
TO BE USED ON ROUTE I-68

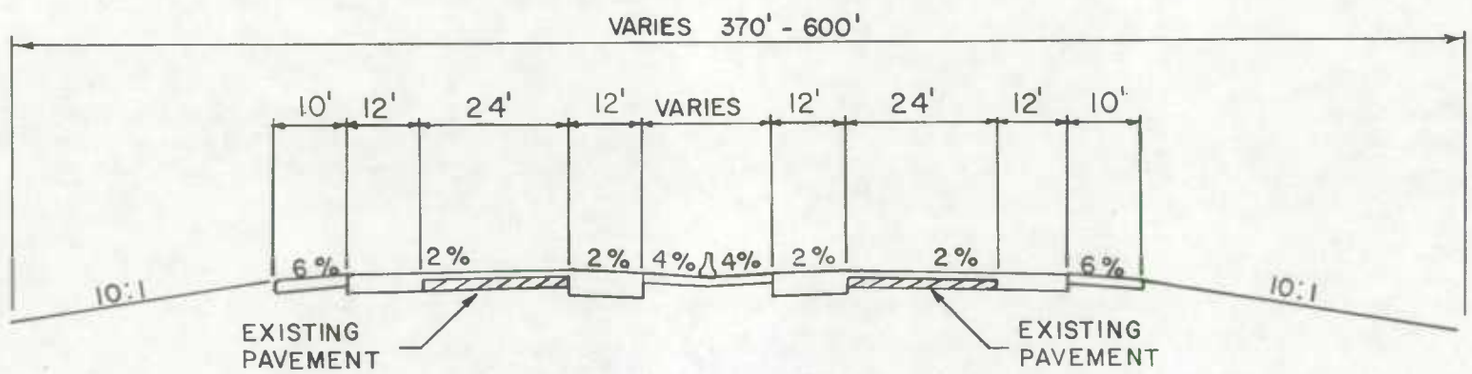

TYPICAL CROSS-SECTION NO. 385
TO BE USED ON ROUTE I-68

NOT TO SCALE

TYPICAL CROSS - SECTION OF IMPROVEMENT

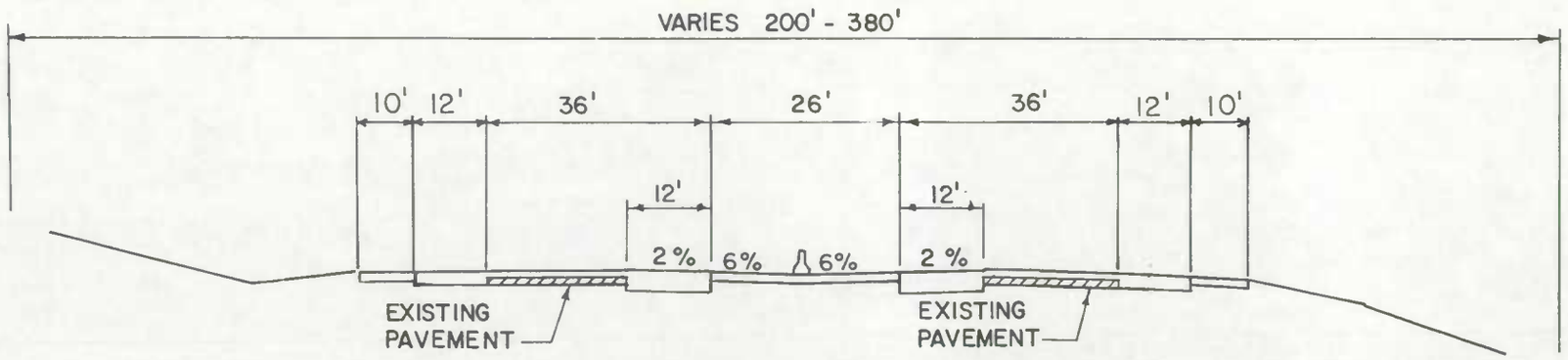

TYPICAL CROSS - SECTION NO. 386
TO BE USED ON ROUTE I-68

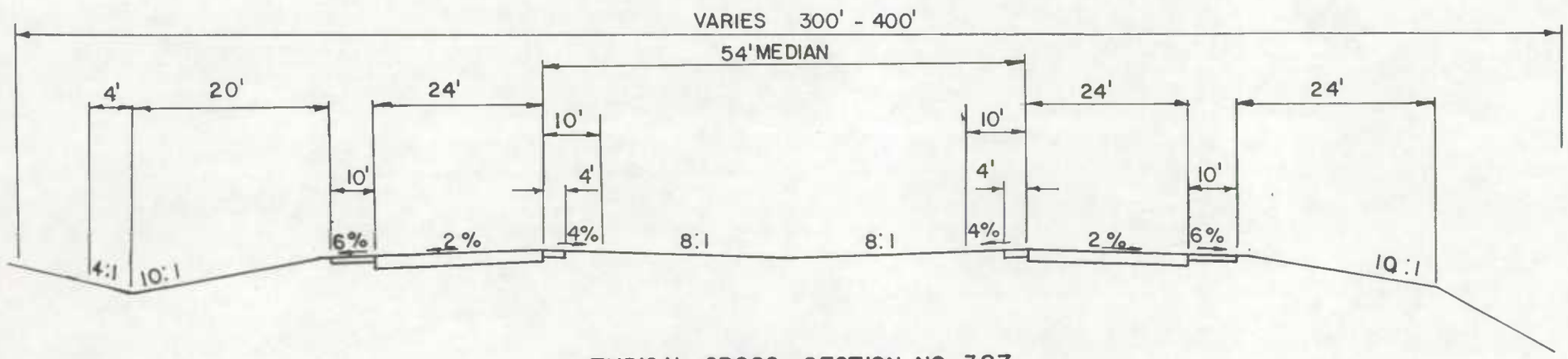

TYPICAL CROSS - SECTION NO. 387
TO BE USED ON ROUTE I-97

NOT TO SCALE

TYPICAL CROSS - SECTION OF IMPROVEMENT

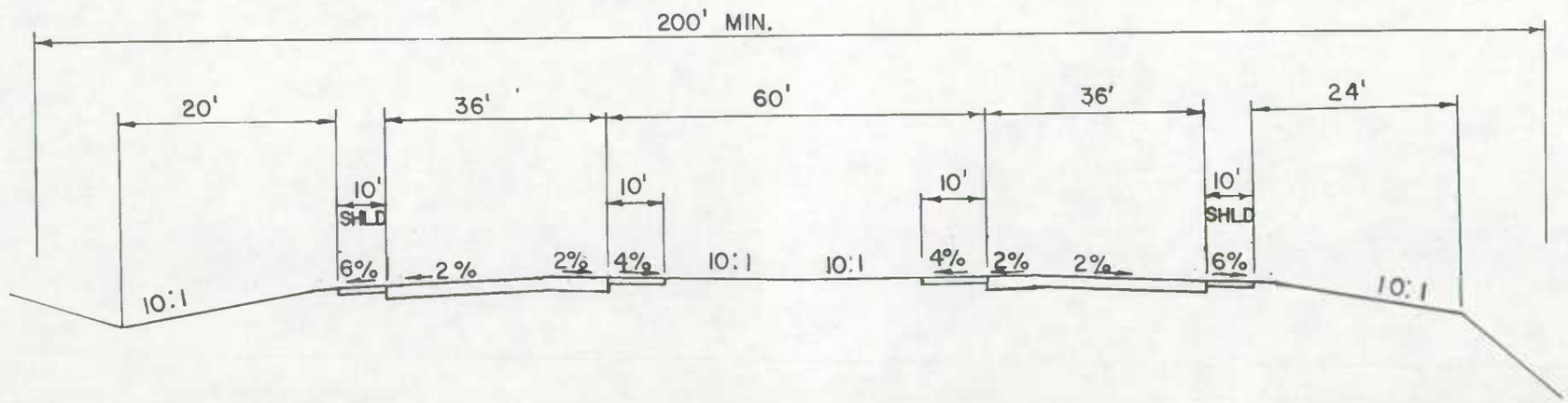

TYPICAL CROSS - SECTION NO. 388
TO BE USED ON ROUTE I-97

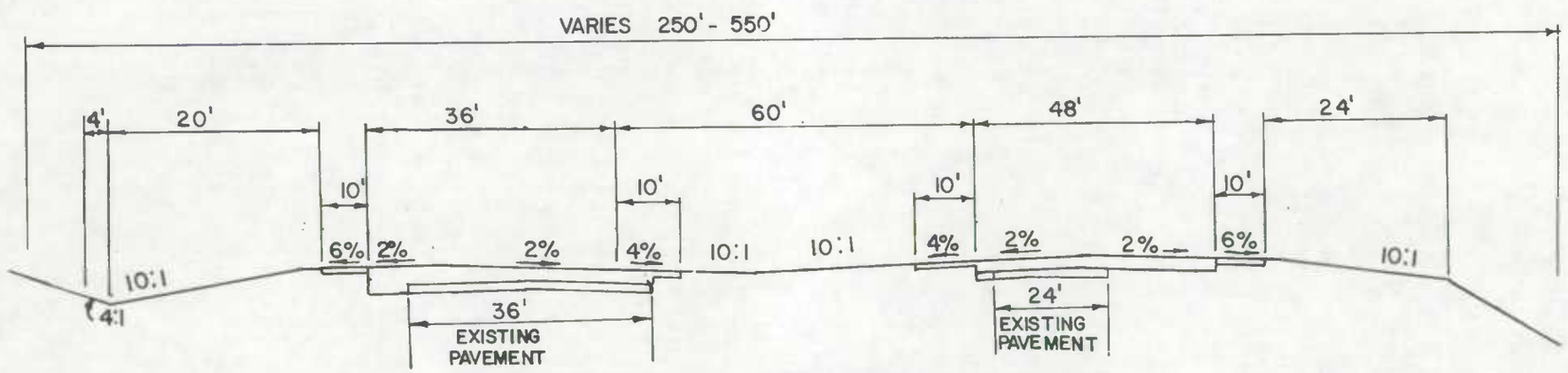

TYPICAL CROSS - SECTION NO. 389
TO BE USED ON ROUTE I-97

NOT TO SCALE

TYPICAL CROSS - SECTION OF IMPROVEMENT

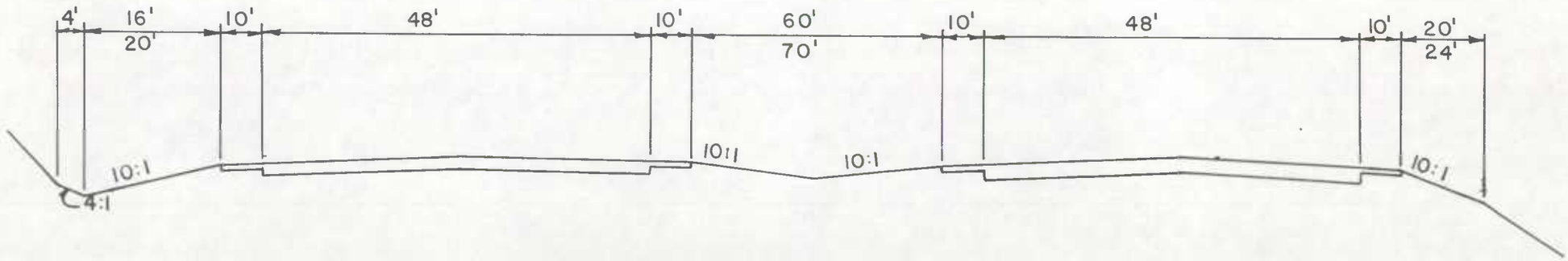

TYPICAL CROSS - SECTION NO. 390
TO BE USED ON ROUTE I-97

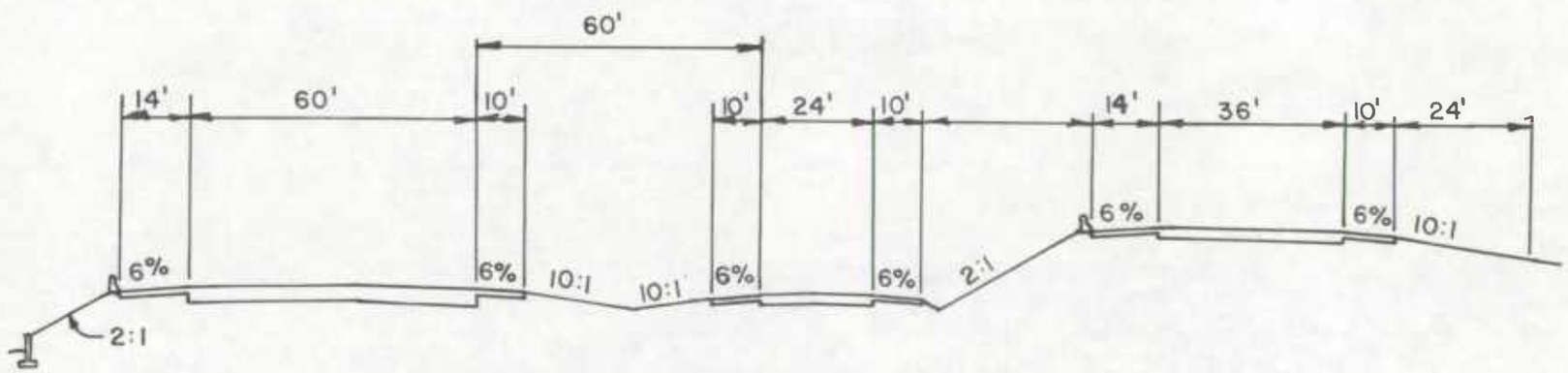

TYPICAL CROSS- SECTION NO. 391
TO BE USED ON ROUTE I-97

NOT TO SCALE

TYPICAL CROSS - SECTION OF IMPROVEMENT

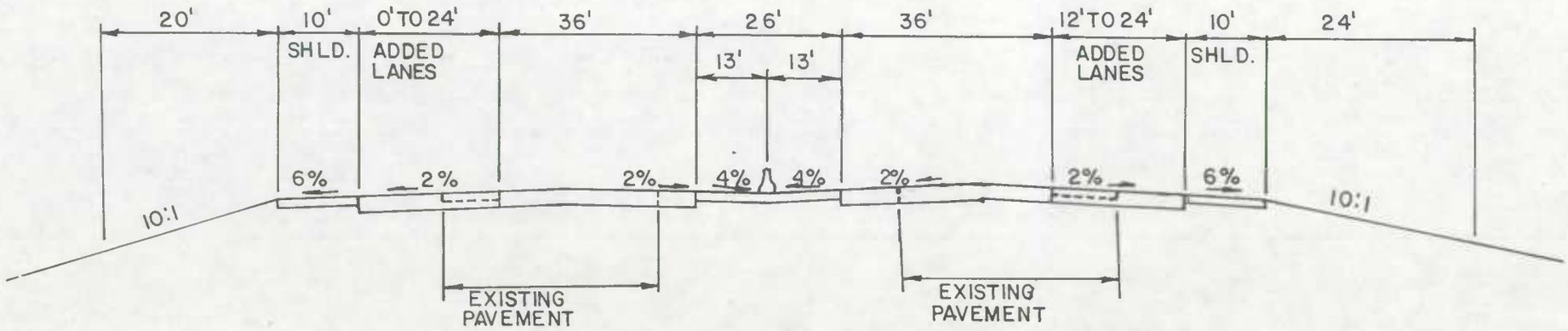

TYPICAL CROSS-SECTION NO. 392
TO BE USED ON ROUTE I-68

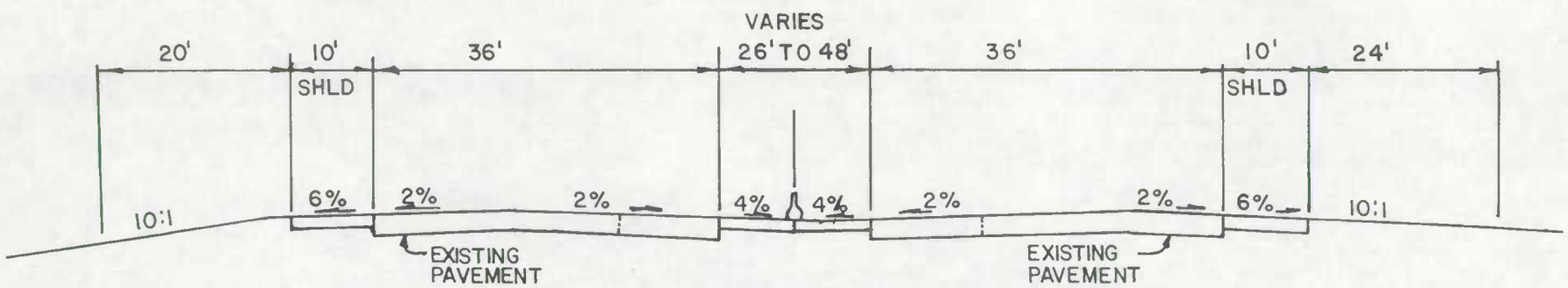

TYPICAL CROSS-SECTION NO. 393
TO BE USED ON ROUTE I-68

NOT TO SCALE

TYPICAL CROSS-SECTION OF IMPROVEMENT

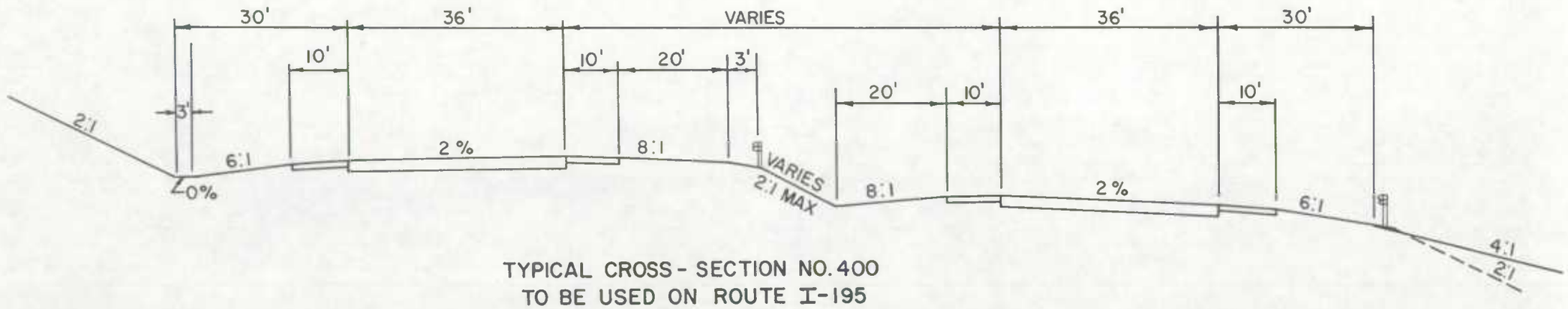

TYPICAL CROSS - SECTION NO. 400
TO BE USED ON ROUTE I-195

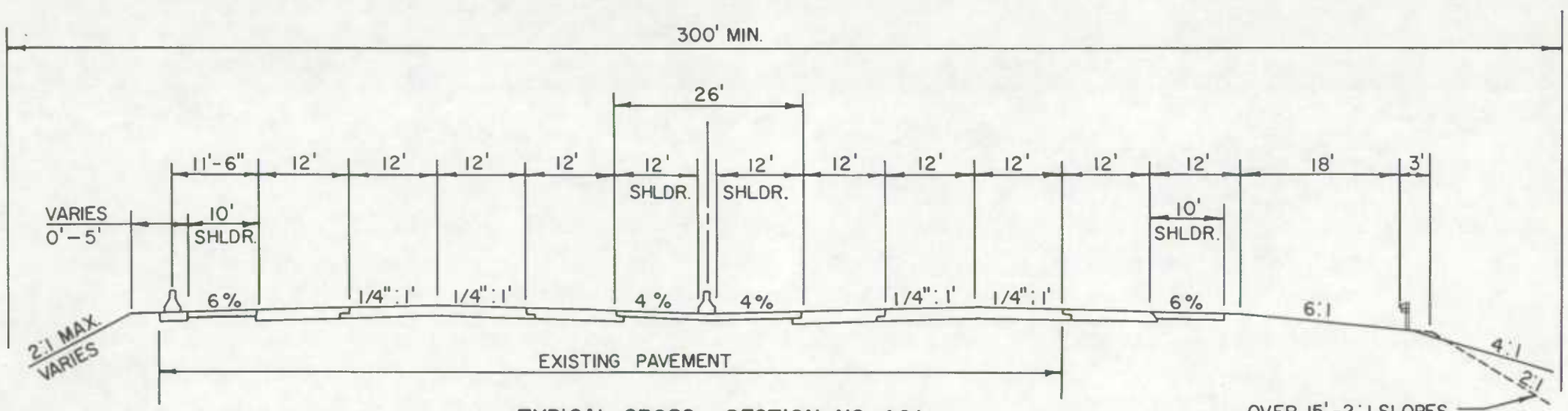

TYPICAL CROSS - SECTION NO. 401
TO BE USED ON ROUTE I-270

OVER 15'-2:1 SLOPES
WITH GUARDRAIL

NOT TO SCALE

TYPICAL CROSS SECTION OF IMPROVEMENT

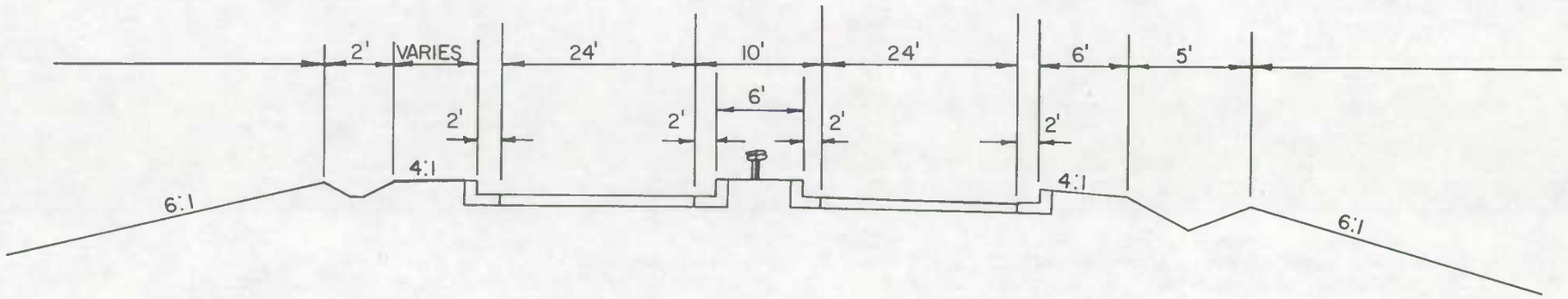

TYPICAL CROSS-SECTION NO. 402
TO BE USED ON ROUTE I-195

NOT TO SCALE

TYPICAL CROSS-SECTIONS OF IMPROVEMENT

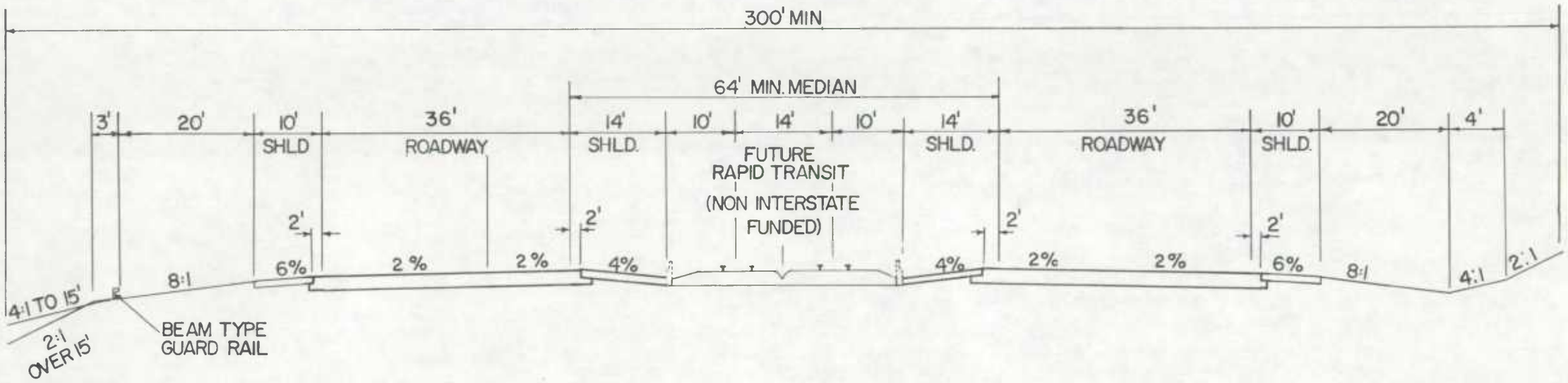

TYPICAL CROSS-SECTION NO. 404

TO BE USED ON ROUTE I-795

NOT TO SCALE

TYPICAL CROSS-SECTION OF IMPROVEMENT

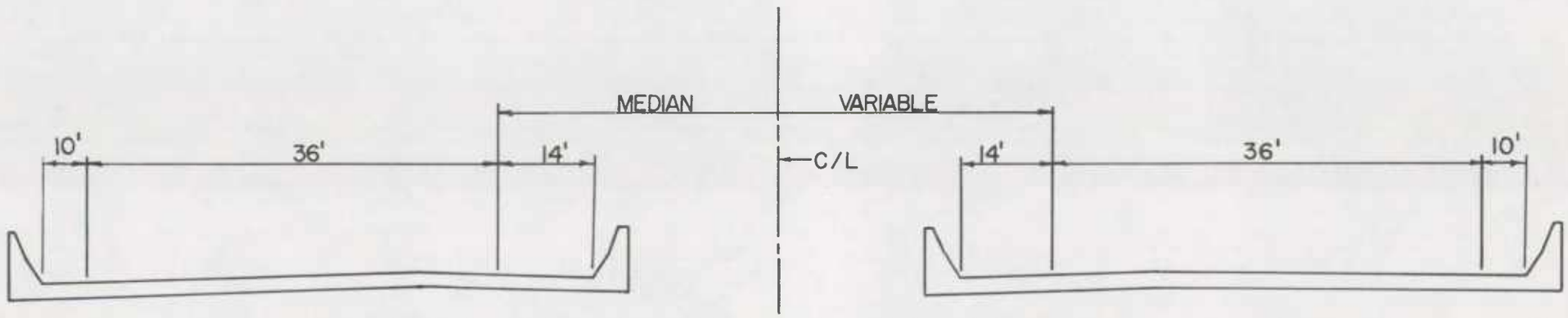

CROSS-SECTION NO. 405 FOR DUAL BRIDGES
TO BE USED ON ROUTE I-795

NOT TO SCALE

TYPICAL CROSS-SECTION OF IMPROVEMENT

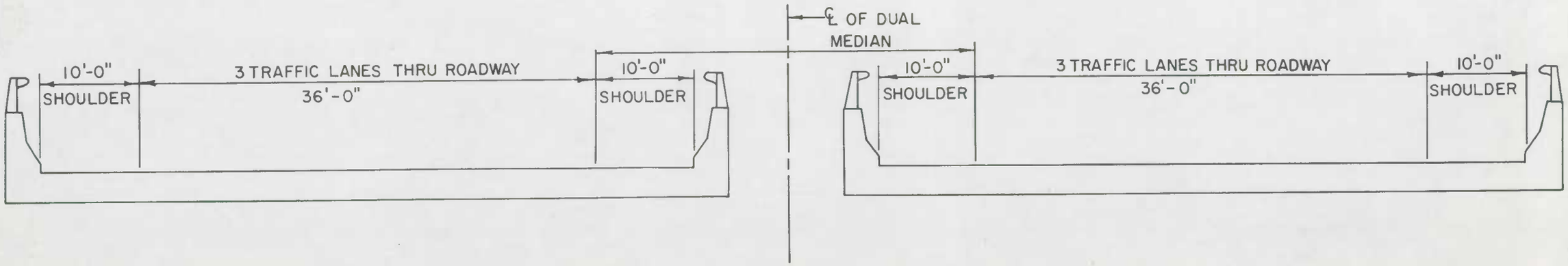

SECTION NO. 406: TYPICAL CROSS-SECTION FOR DUAL BRIDGE FOR I-195

TYPICAL CROSS - SECTION OF IMPROVEMENT

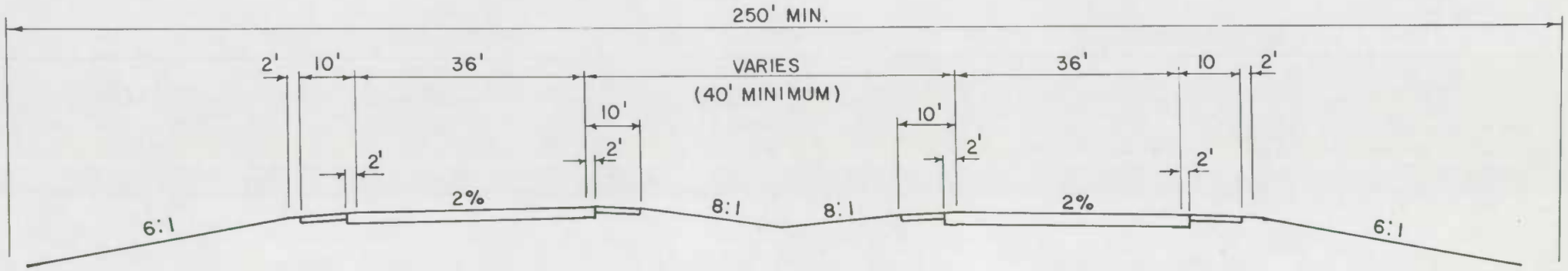

TYPICAL CROSS - SECTION NO. 407
TO BE USED ON ROUTE I-195

NOT TO SCALE

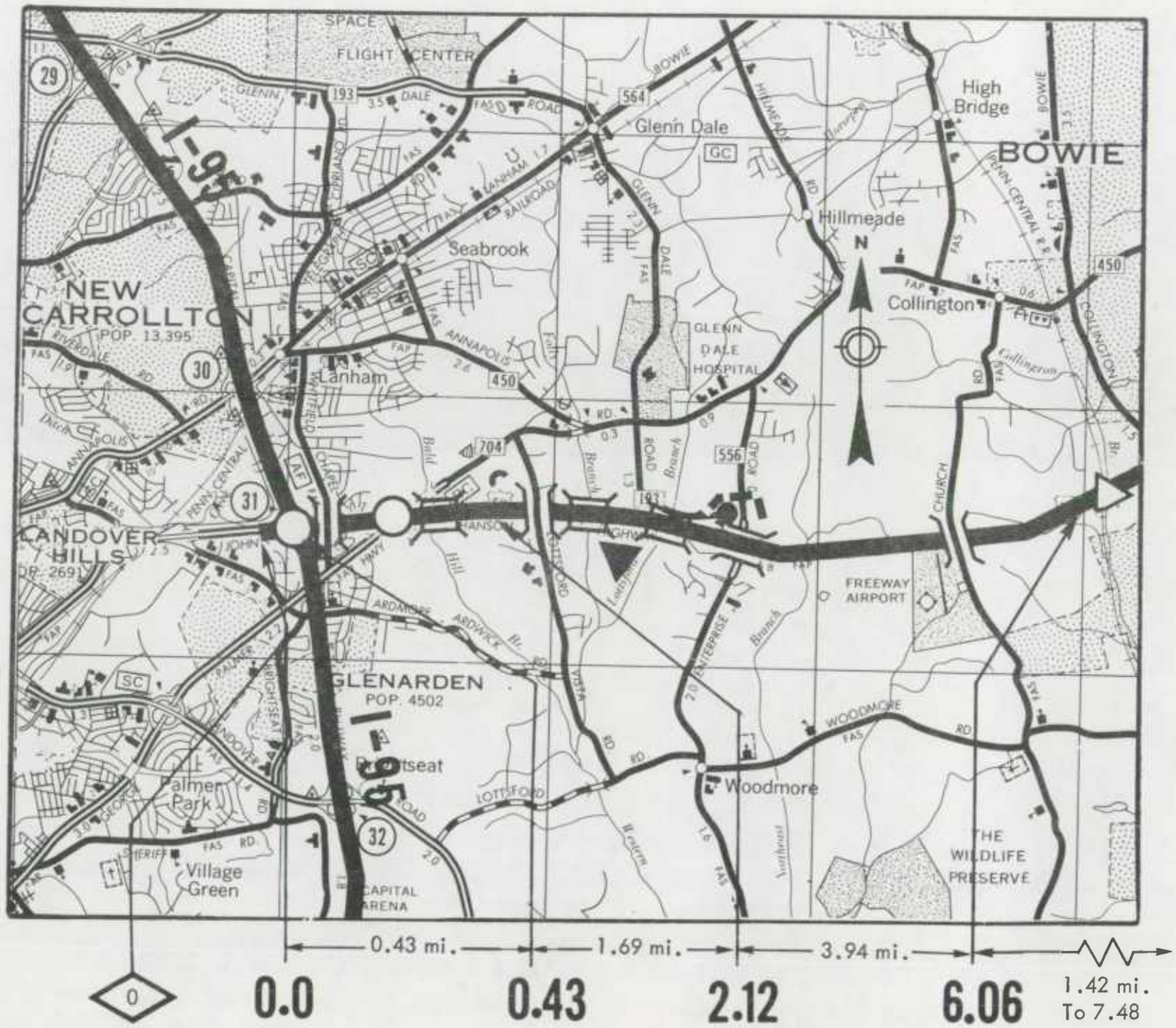

LEGEND

- Interstate Locotion Status 4 thru 1
- Interstate Location Stotus 5a(2) or 5a(3)
- Segments Appraved Under Section 139 Title 23, USC, (non-chargeable).
- Interchange
- Highway Grade Separation -Na Connection
- Railroad Grade Separotion
- Combinatian Highway-Railroad Grade Separation
- Other Bridge
- Tunnel
- TOLL — Toll Bridge, Tunnel, Highway or Combination
- Frontoge Road
- Terminated Cross Road
- Intersection At-Grode
- Urban Area Boundary
- Safety Rest Area
- 13 — Post Mileage
- 1 2 — Route Sections
- 2.8 — Estimate Section Number

MARYLAND

INTERSTATE ROUTE 68

SHEET 1 OF 3

DATE: DECEMBER 31, 1985

SCALE IN MILES

0 1 2

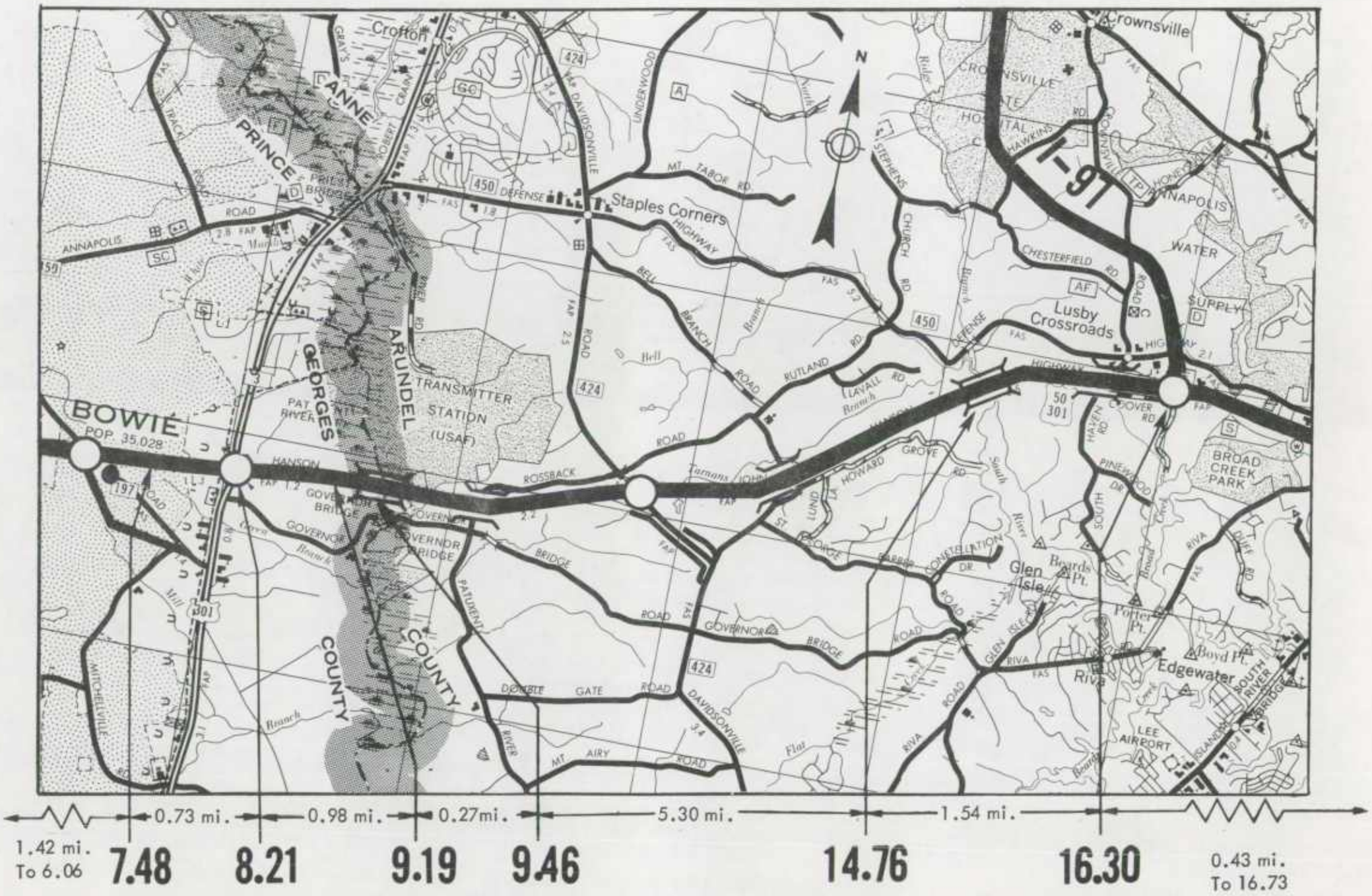

INTERSTATE ROUTE 68

SHEET 2 OF 3

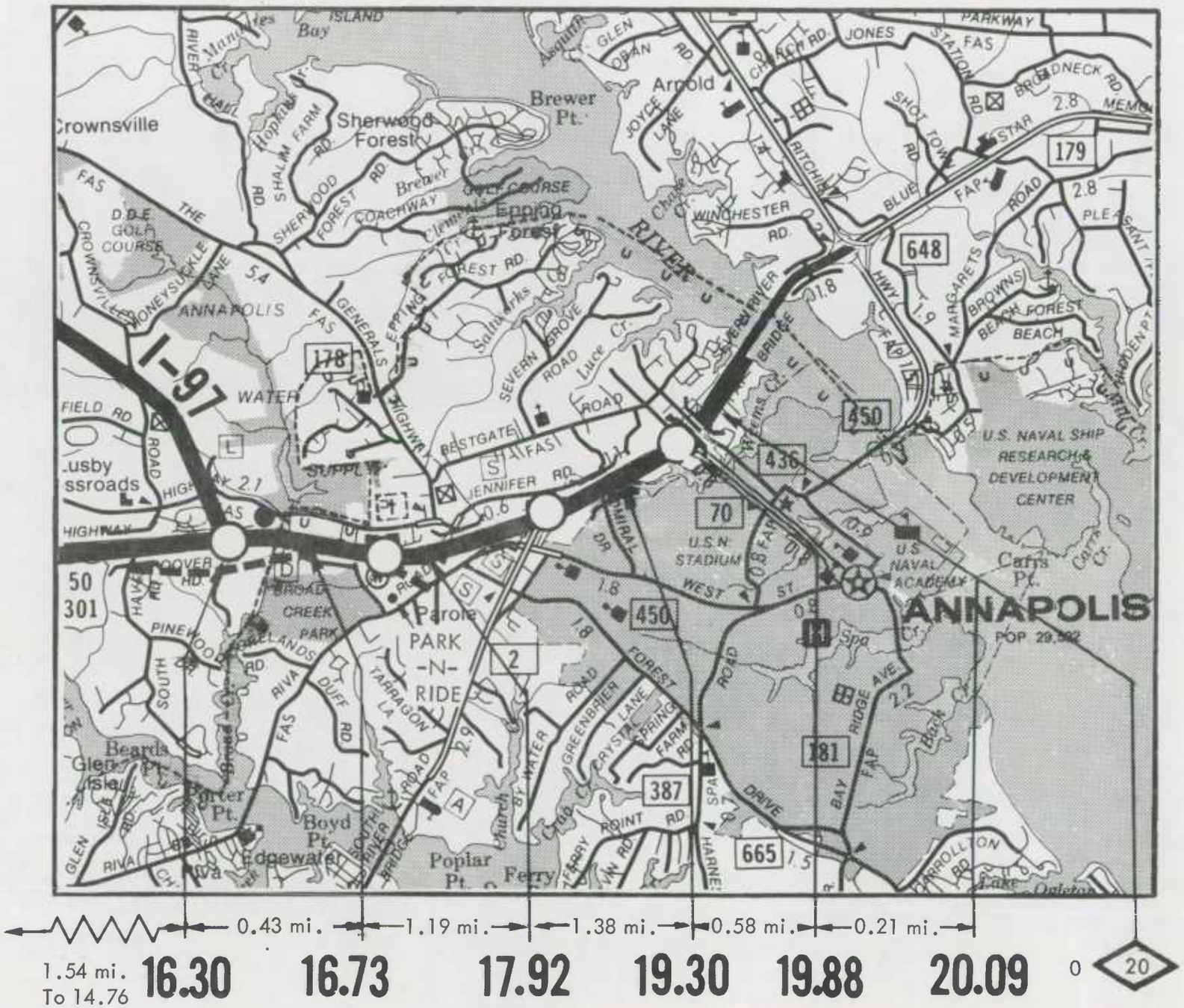

INTERSTATE ROUTE 68

SHEET 3 OF 3.

STATE: MARYLAND CODE: 24

ROUTE: 068

TABLE 8 - DESIGN CLASSIFICATION AND COST ESTIMATE BY ESTIMATE SECTIONS WITH ROUTE TOTALS

ITEM	ESTIMATE SECTION MILEPOST							TOTAL FOR ROUTE
	0.00	0.43	2.12	6.06	7.48	8.21	9.19	
1. FINANCE CODE	23	23	23	23	23	23	23	
2. SECTION LENGTH	0.43	1.69	3.94	1.42	0.73	0.98	0.27	
3. CLASS: RURAL (R) OR URBAN AREA I.D. (NAME AND CODE)	U	U	U	U	U	R	R	
	796	796	796	796	796			
	WASHINGTON	WASHINGTON	WASHINGTON	WASHINGTON	WASHINGTON			
4. MILEAGE INCREMENT: CODE(1,2, OR 3)	2	2	2	2	2	2	2	
5. ROUTE SIGNIFICANCE: CODE (N OR L)	N	N	N	N	N	N	N	
6. DESIGN SPEED (V)	70	70	70	70	70	70	70	
7. BASE YEAR TRAFFIC (1982 ADT)	76,560	76,560	65,120	65,120	65,120	39,710	39,710	
8. TRAFFIC A. DESIGN YEAR	2006	2006	2006	2006	2006	2006	2006	
B. ADT DESIGN YEAR	102,100	102,100	88,300	88,300	88,300	59,100	59,100	
C. DHV DESIGN YEAR	9,370	9,370	7,550	7,550	7,550	5,470	5,470	
D. DIRECTION DISTRIBUTION FACTOR	60	60	60	60	60	55	55	
E. T% TRUCKS DESIGN YEAR DHV	04	04	04	04	04	04	04	
F. T% TRUCKS DESIGN YEAR ADT	10	10	10	10	10	10	10	
9. NUMBER LANES TO BE CONSTRUCTED THIS ESTIMATE	02	02	02	02	02	02	02	
10. ULTIMATE NUMBER THROUGH TRAFFIC LANES	06	06	06	06	06	06	06	
11. TYPICAL CROSS-SECTION REFERENCE	392	382	383	383	383	383	383	
12. RIGHT-OF-WAY WIDTH: PREVAILING	300	300	300	300	300	300	350	
13. MEDIAN WIDTH: PREVAILING	26	26	50	50	50	50	50	
14. STATUS OF DEVELOPMENT DEC. 31, 1983 (PR-511)	2A2F	2A2F	2A2F	2A2F	2A2F	2A2F	2A2F	
WORK CLASSIFICATION	ESTIMATED COSTS (1,000 DOLLARS)							
1. PRELIMINARY ENGINEERING	0	0	0	0	0	0	0	
2. R.O.W. A. ACQUISITION	210	500	0	0	1,580	1,580	0	
B. RELOCATION	0	0	0	0	0	0	0	
3. UTILITY ADJUSTMENTS	83	328	765	276	142	190	52	
4. EROSION CONTROL, CLEAR, GRUB, GRADE, DRAIN, & MINOR STRUCTURES	0	3,498	6,736	2,742	1,377	1,824	521	
5. SUBBASE,BASE, SURFACING, & SHOULDERS	0	12,985	13,712	6,076	1,977	2,618	748	
6. R.R. GRADE SEPARATIONS	0	0	0	0	0	0	0	
7. HIGHWAY GRADE SEPARATIONS WITHOUT RAMPS	1,819	2,016	1,651	1,439	0	0	0	
8. INTERCHANGES	28,003	0	0	8,098	0	29,360	0	
9. OTHER BRIDGES, TUNNELS, AND WALLS	0	837	250	837	180	239	68	
10. TRAFFIC CONTROL DEVICES	0	0	350	186	39	51	15	
11. WEIGH STATIONS, PEDESTRIAN AND BICYCLE FACILITIES	0	0	0	0	0	0	0	
12. SAFETY WORK ON COMPLETED SECTIONS	0	0	0	0	0	0	0	
13. NOISE ABATEMENT MEASURES	353	1,387	0	1,686	0	0	0	
14. ROADSIDE IMPROVEMENT A. LANDSCAPE PLANTING	0	0	0	0	0	0	0	
B. REST AREAS & OVERLOOKS	0	0	0	0	0	0	0	
15. ALL OTHER ITEMS: MAINT. OF TRAF., TRAINING, MOBIL, ETC.	250	1,100	1,695	725	280	371	106	
18. SUBTOTAL, LINES 4 THRU 15	30,426	21,822	24,395	21,791	3,853	34,462	1,458	
17. CONSTRUCTION ENGINEERING & CONTINGENCIES, 15% of LINE 18	4,564	3,273	3,659	3,267	578	5,169	219	
18. TOTAL COST OF CONSTRUCTION, LINES 18 & 17	34,989	25,096	28,053	25,060	4,431	39,631	1,677	
19. TOTAL ESTIMATE COST, LINES 1, 2, 3, & 18	35,282	25,924	28,818	25,336	6,153	41,401	1,729	

** ROUNDED TO ZERO

STATE: MARYLAND CODE: 24
ROUTE: 068

TABLE 2 - DESIGN CLASSIFICATION AND COST ESTIMATE BY ESTIMATE SECTIONS WITH ROUTE TOTALS

ITEM	ESTIMATE SECTION MILEPOST							TOTAL FOR ROUTE
	9.46	14.76	16.30	16.73	17.92	19.30	19.88	
1. FINANCE CODE	23	23	23	23	23	23	23	
2. SECTION LENGTH	5.30	1.54	0.43	1.19	1.38	0.58	0.21	20.09
3. CLASS: RURAL (R) OR URBAN AREA I.D. (NAME AND CODE)	R	R	R	U	U	U	U	
				258	258	258	258	
				ANNAPOLIS	ANNAPOLIS	ANNAPOLIS	ANNAPOLIS	
4. MILEAGE INCREMENT: CODE(1,2, OR 3)	2	2	2	2	2	2	2	
5. ROUTE SIGNIFICANCE: CODE (N OR L)	N	N	N	N	N	N	N	
6. DESIGN SPEED (V)	70	70	70	70	70	70	70	
7. BASE YEAR TRAFFIC (1982 ADT)	39,710	35,475	35,475	35,475	52,305	52,305	52,305	
8. TRAFFIC A. DESIGN YEAR	2006	2006	2006	2006	2006	2006	2006	
B. ADT DESIGN YEAR	59,100	52,700	91,400	58,300	81,600	81,600	81,600	
C. DHV DESIGN YEAR	5,470	4,980	9,140	5,830	8,160	8,160	8,160	
D. DIRECTION DISTRIBUTION FACTOR	55	55	55	55	55	55	55	
E. T% TRUCKS DESIGN YEAR DHV	04	04	06	06	06	06	06	
F. T% TRUCKS DESIGN YEAR ADT	10	10	08	08	08	08	08	
9. NUMBER LANES TO BE CONSTRUCTED THIS ESTIMATE	02	02	02	02	02	02	02	
10. ULTIMATE NUMBER THROUGH TRAFFIC LANES	06	06	06	06	06	06	06	
11. TYPICAL CROSS-SECTION REFERENCE	383	383	384	384	384	384	384	
12. RIGHT-OF-WAY WIDTH: PREVAILING	350	200	500	400	200	200	200	
13. MEDIAN WIDTH: PREVAILING	50	26	26	26	26	26	26	
14. STATUS OF DEVELOPMENT DEC. 31, 1983 (PR-511)	2A2F	2A2F	2A2F	2A2F	2A2F	2A2F	2A2F	
WORK CLASSIFICATION	ESTIMATED COSTS (1,000 DOLLARS)							
1. PRELIMINARY ENGINEERING	0	0	0	0	0	0	0	
2. R.O.W. A. ACQUISITION	0	900	2,000	2,500	430	1,500	500	11,700
B. RELOCATION	0	0	0	0	0	0	0	
3. UTILITY ADJUSTMENTS	103	611	171	472	4,197	237	86	7,713
4. EROSION CONTROL, CLEAR, GRUB, GRADE, DRAIN, & MINOR STRUCTURES	2,657	3,454	987	2,608	4,830	1,544	571	33,349
5. SUBBASE,BASE, SURFACING, & SHOULDERS	6,929	1,620	463	1,223	5,478	1,930	714	56,473
6. R.R. GRADE SEPARATIONS	0	0	0	0	0	0	0	
7. HIGHWAY GRADE SEPARATIONS WITHOUT RAMPS	7,139	351	0	0	9,399	1,856	0	25,669
8. INTERCHANGES	1,495	0	7,492	0	0	1,719	0	76,167
9. OTHER BRIDGES, TUNNELS, AND WALLS	72	0	600	0	1,144	0	0	4,227
10. TRAFFIC CONTROL DEVICES	929	1,547	214	569	1,120	15	392	5,427
11. WEIGH STATIONS, PEDESTRIAN AND BICYCLE FACILITIES	0	0	0	0	0	0	0	
12. SAFETY WORK ON COMPLETED SECTIONS	0	0	0	0	0	0	0	
13. NOISE ABATEMENT MEASURES	0	1,714	490	1,294	849	502	0	8,275
14. ROADSIDE IMPROVEMENT A. LANDSCAPE PLANTING	0	0	0	0	0	0	0	
B. REST AREAS & OVERLOOKS	0	0	0	0	0	0	0	
15. ALL OTHER ITEMS: MAINT. OF TRAF., TRAINING, MOBIL, ETC.	461	441	126	333	752	258	95	6,993
16. SUBTOTAL, LINES 4 THRU 15	19,680	9,126	10,372	6,027	23,571	7,824	1,772	216,579
17. CONSTRUCTION ENGINEERING & CONTINGENCIES, 15% of LINE 16	2,951	1,369	1,558	904	3,537	1,173	266	32,487
18. TOTAL COST OF CONSTRUCTION, LINES 16 & 17	22,633	10,496	11,928	6,931	27,106	9,000	2,038	249,069
19. TOTAL ESTIMATE COST, LINES 1, 2, 3, & 18	22,736	12,007	14,099	9,903	31,733	10,737	2,624	268,482

** ROUNDED TO ZERO

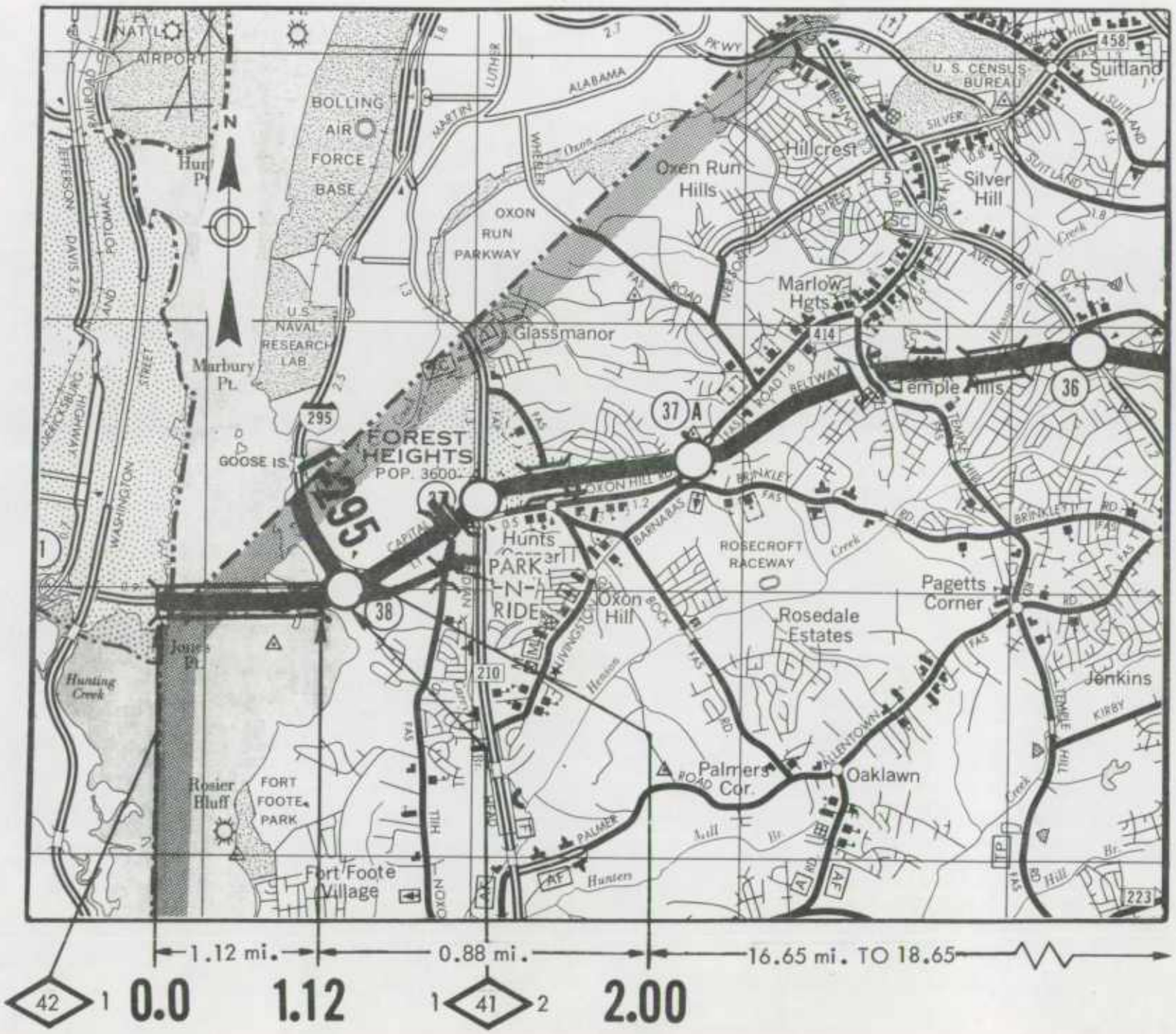

LEGEND

- Interstate Location Status 4 thru 1
- Interstate Location Status 5a(2) or 5a(3)
- Segments Approved Under Section 139 Title 23, USC, (non-chargeable).
- Interchange
- Highway Grade Separation -No Connection
- Railroad Grade Separation
- Combination Highway-Railroad Grade Separation
- Other Bridge
- Tunnel
- TOLL — Toll Bridge, Tunnel, Highway or Combination
- Frontage Road
- Terminated Cross Road
- Intersection At-Grade
- Urban Area Boundary
- Safety Rest Area
- 13 — Post Mileage
- 1 2 — Route Sections
- 2.8 — Estimate Section Number

MARYLAND

INTERSTATE ROUTE 95

SHEET 1 OF 11

DATE: DECEMBER 31, 1985

SCALE IN MILES

0 1 2

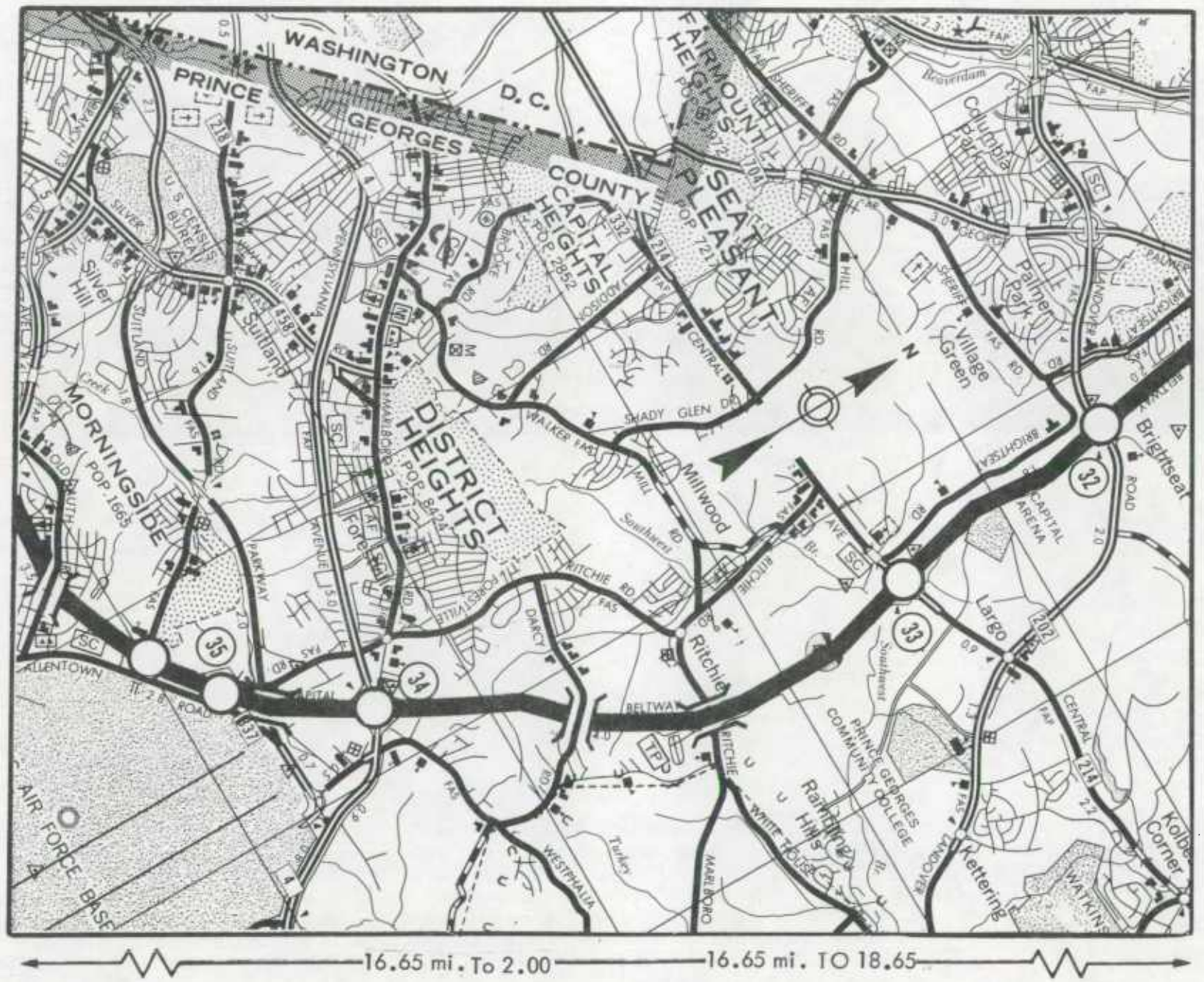

INTERSTATE ROUTE 95

SHEET 2 OF 11

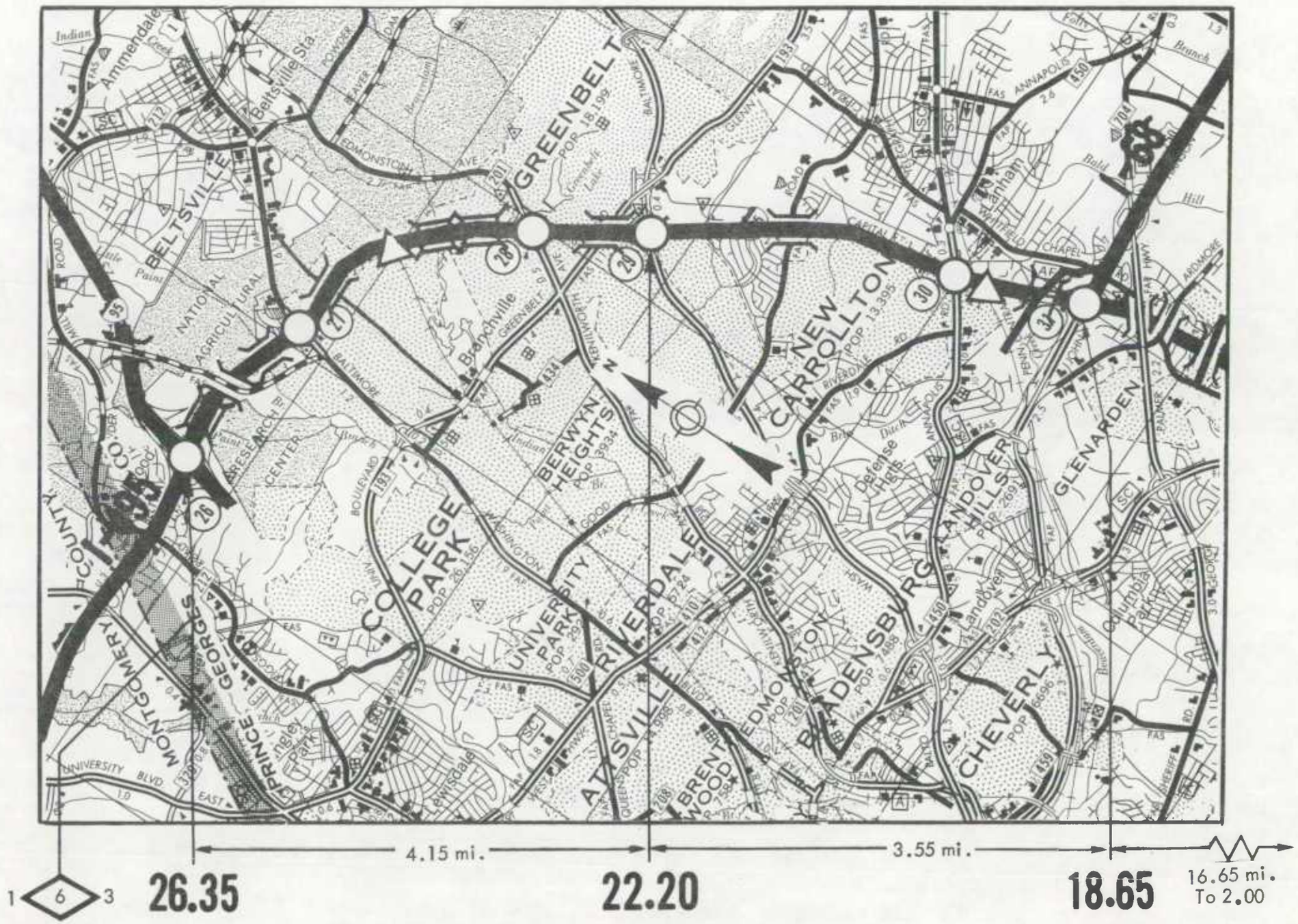

INTERSTATE ROUTE 95

SHEET 3 OF 11

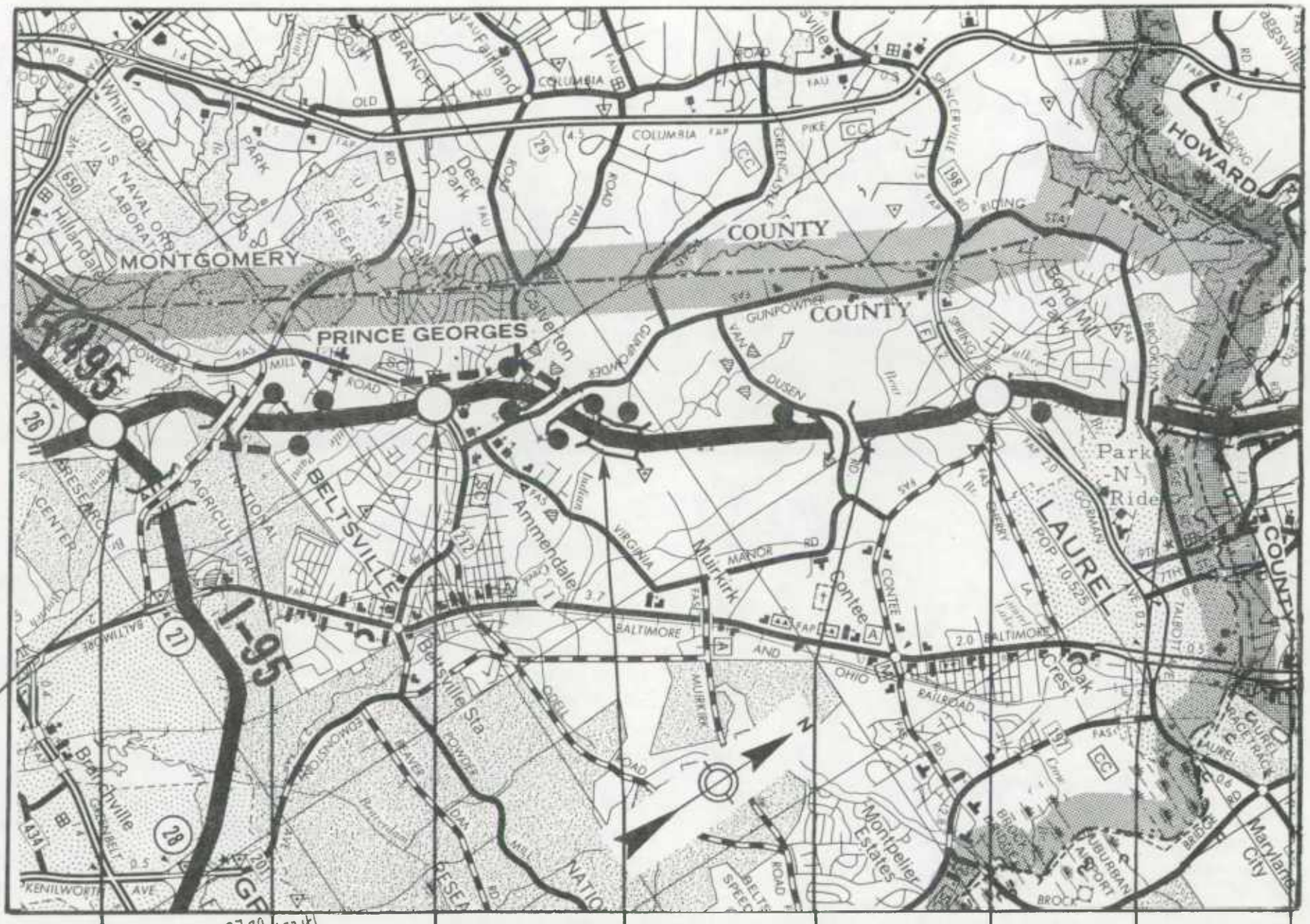

INTERSTATE ROUTE 95

SHEET 4 OF 11

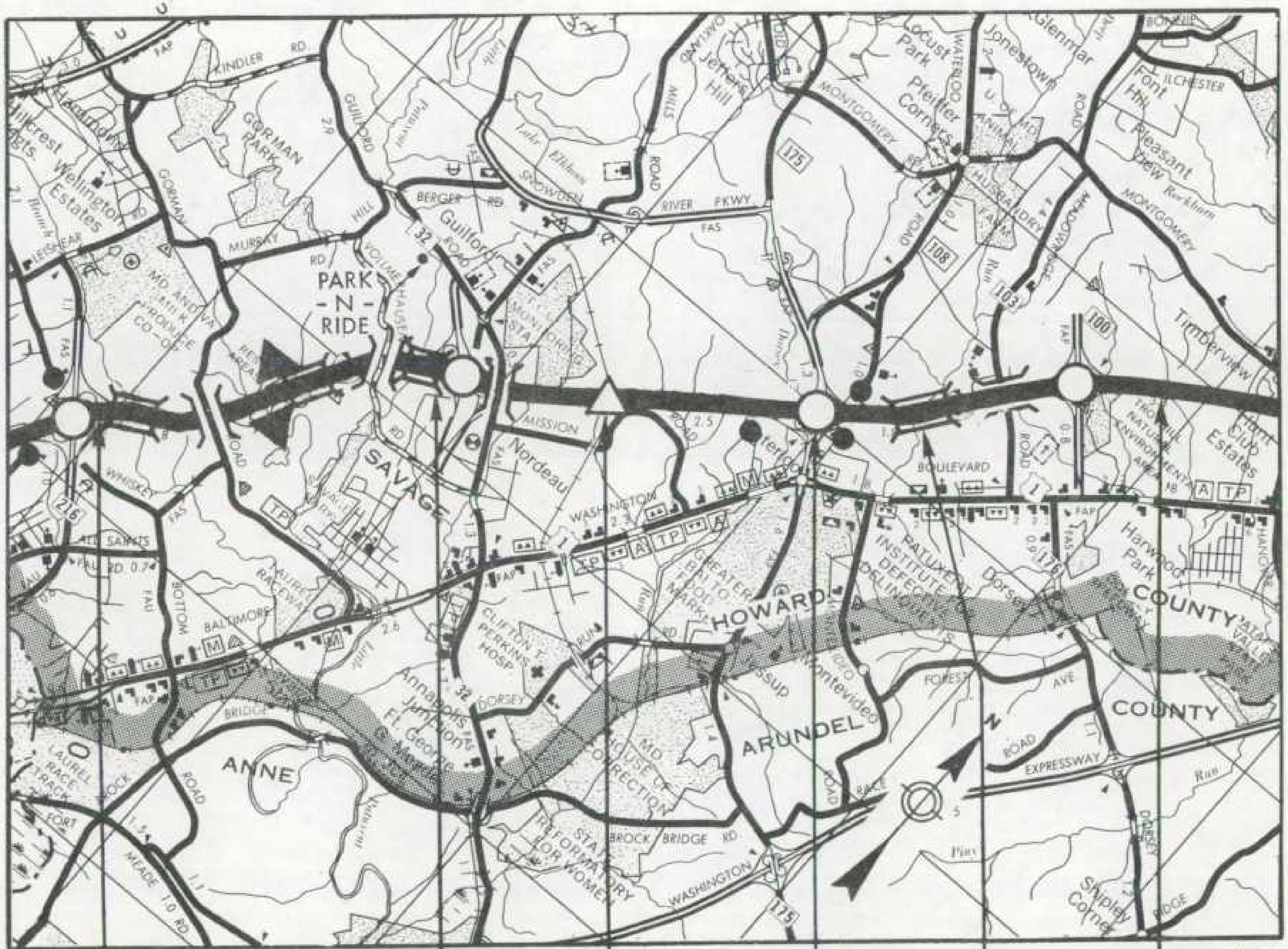

1.36 mi. To 34.44 — 35.80 — 2.16 mi. — 37.96 — 1.25 mi. — 39.21 — 1.60 mi. — 40.81 — 0.62 mi. — 41.43 — 1.92 mi. — 43.35 — 2.55 mi. To 45.90

INTERSTATE ROUTE 95

SHEET 5 OF 11

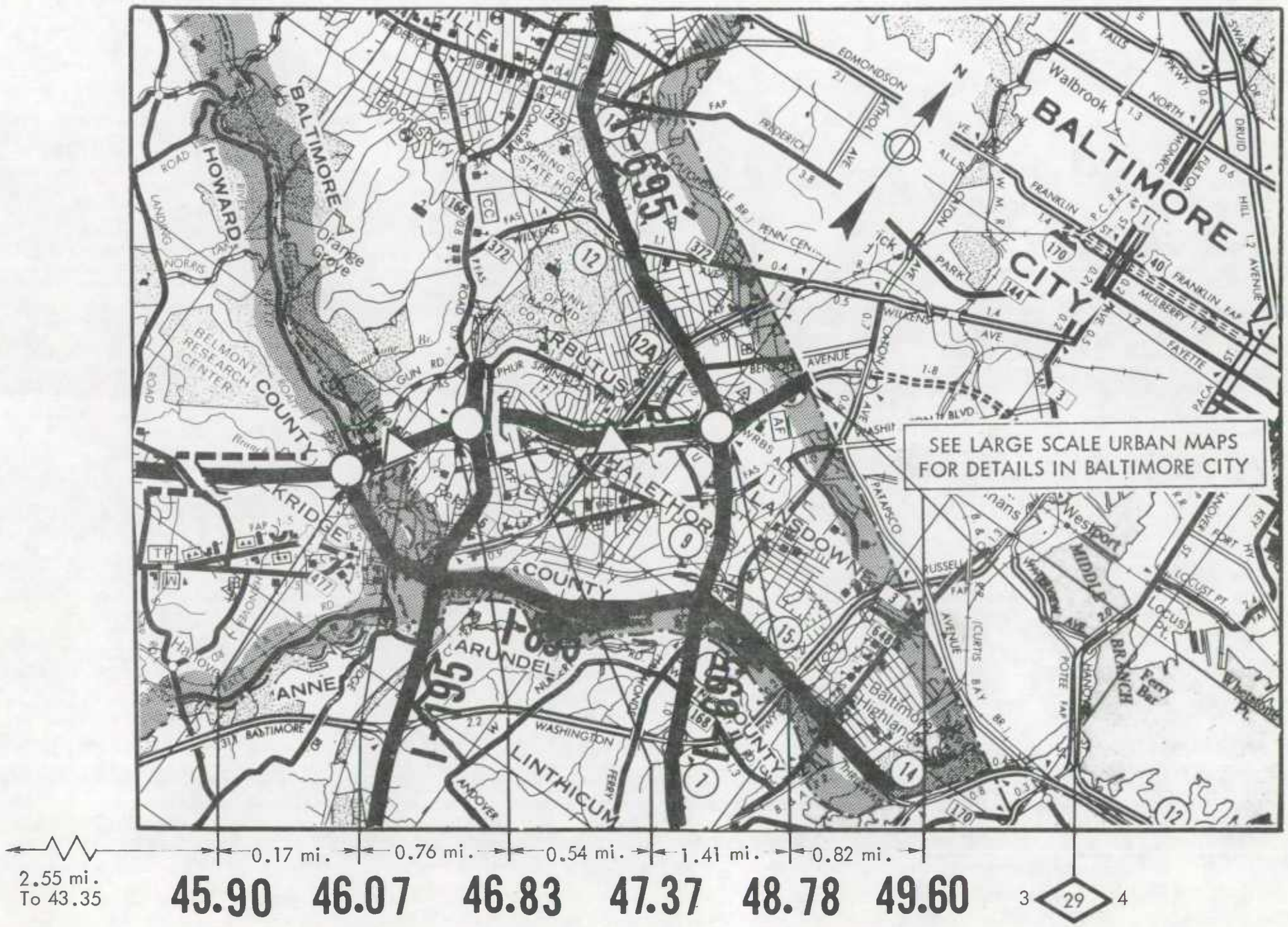

INTERSTATE ROUTE 95

SHEET 6 OF 11

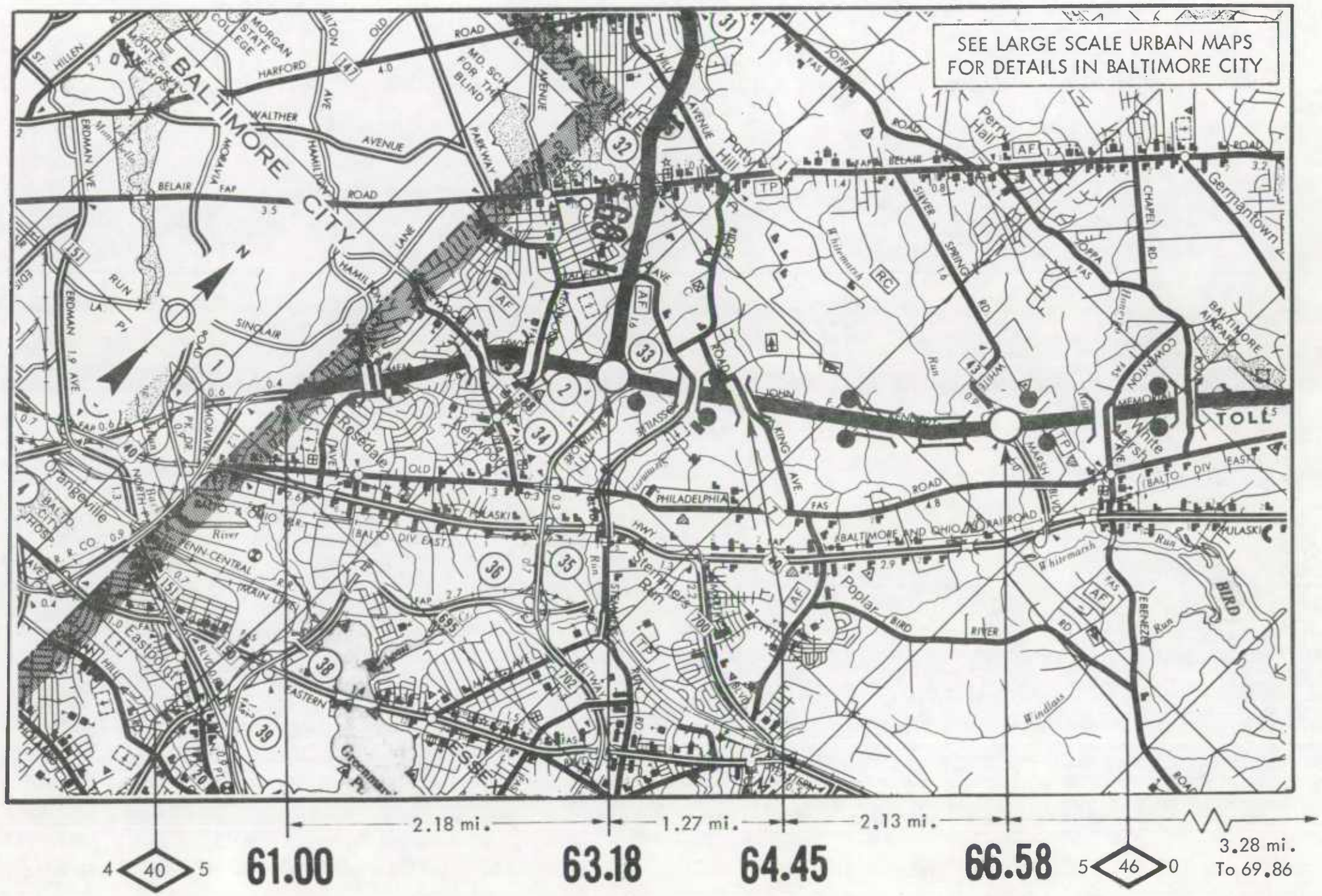

INTERSTATE ROUTE 95

SHEET 7 OF 11

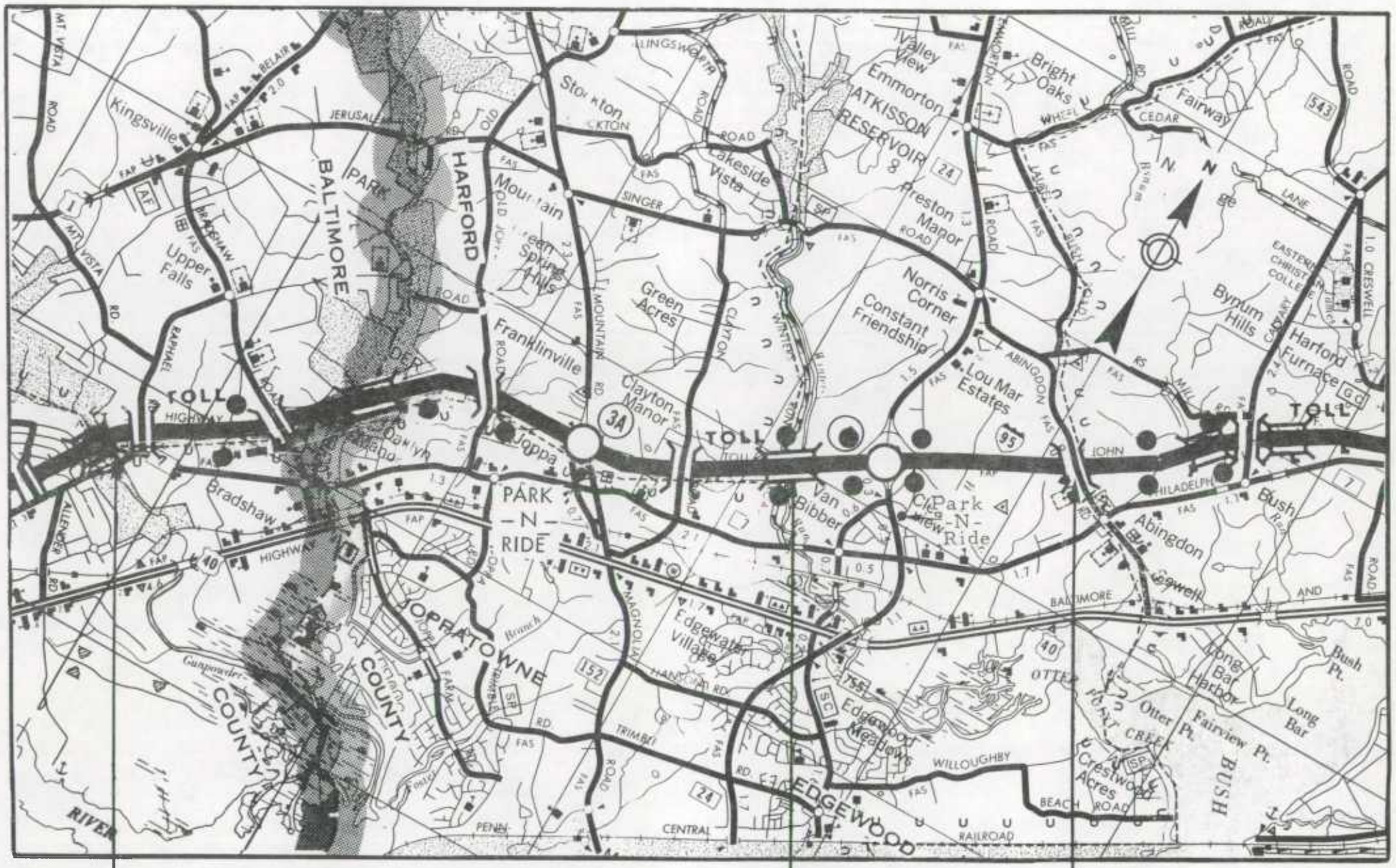

INTERSTATE ROUTE 95

SHEET 8 OF 11

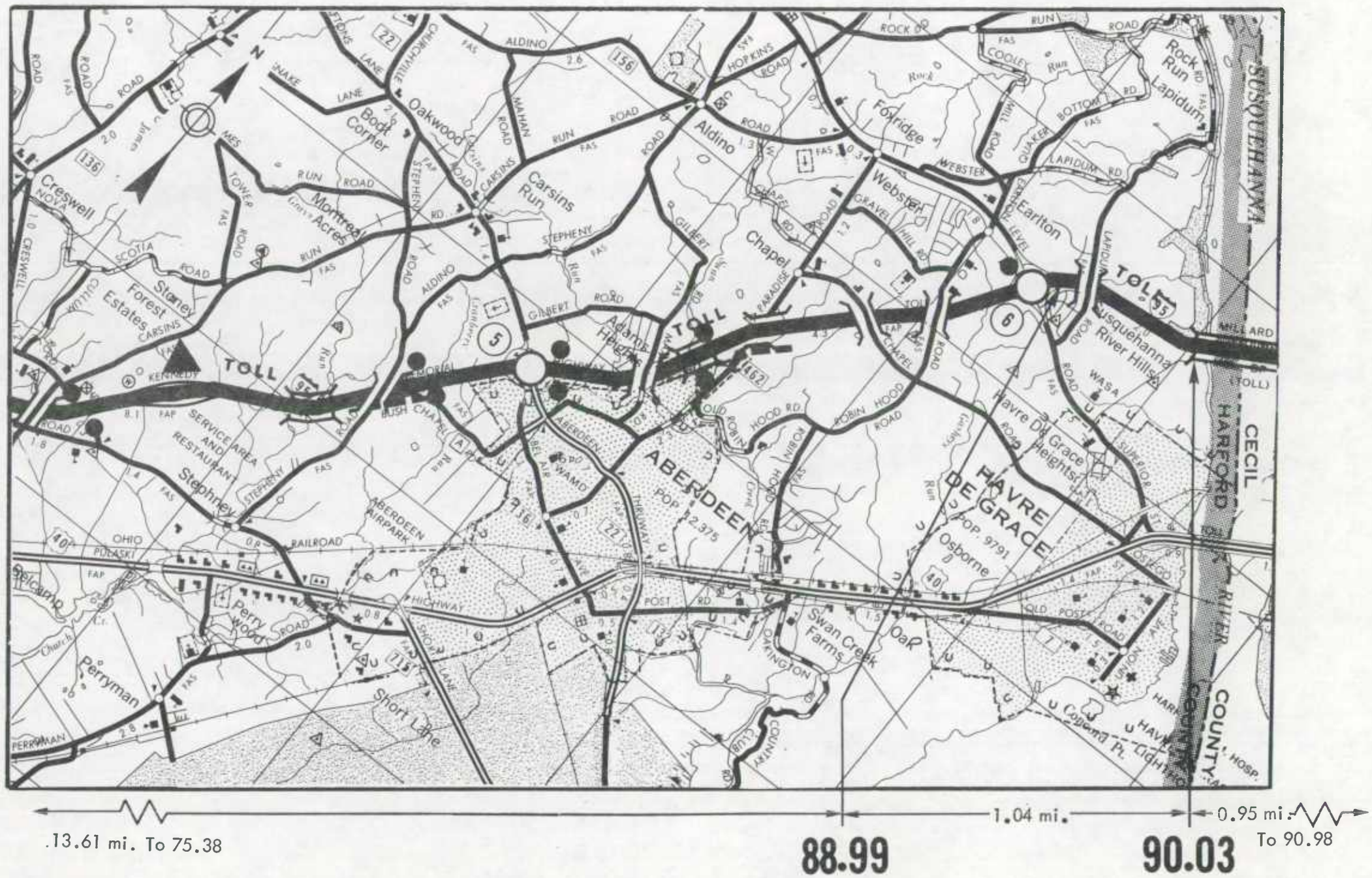

INTERSTATE ROUTE 95

SHEET 9 OF 11

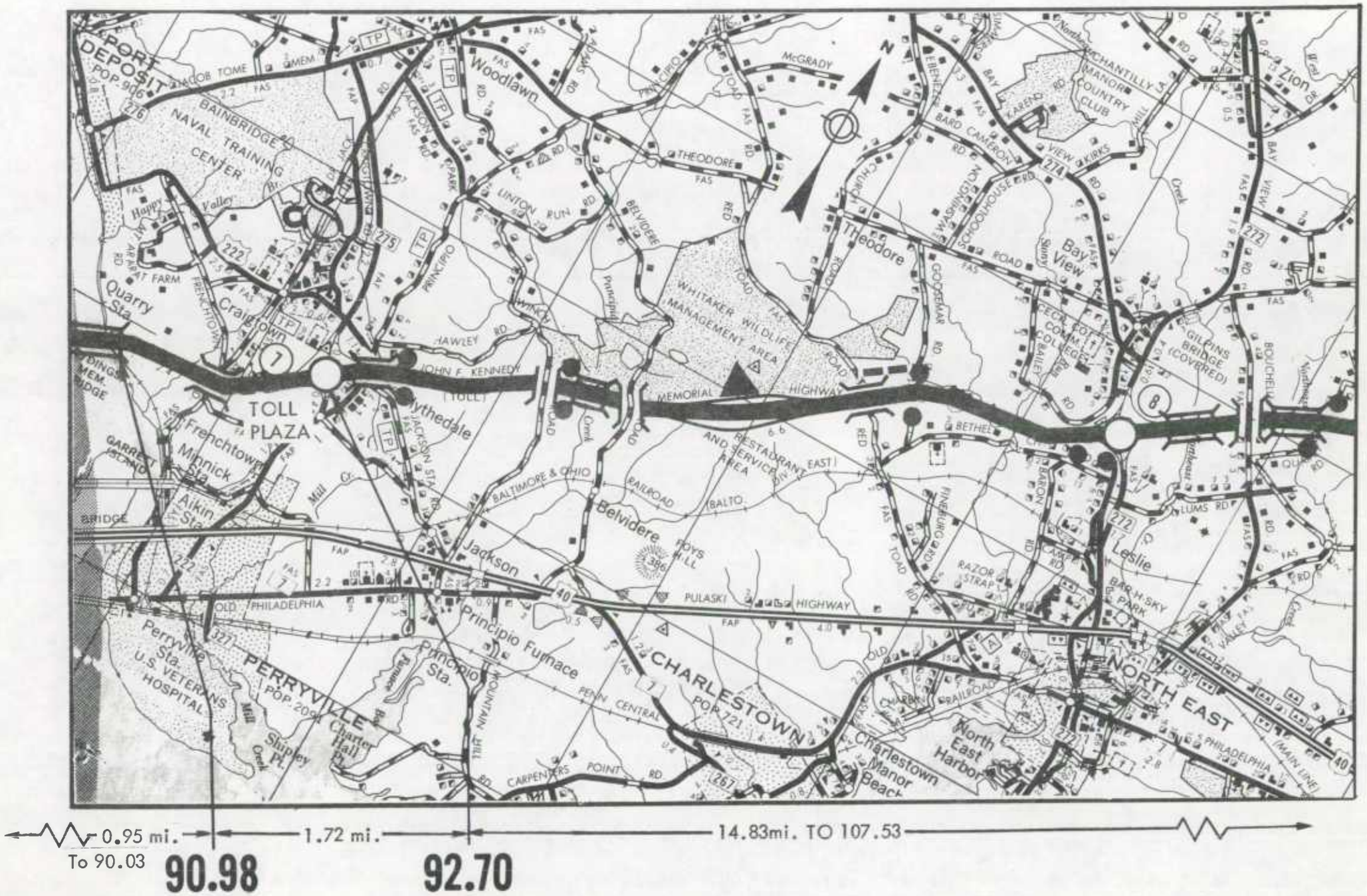

INTERSTATE ROUTE 95

SHEET 10 OF 11

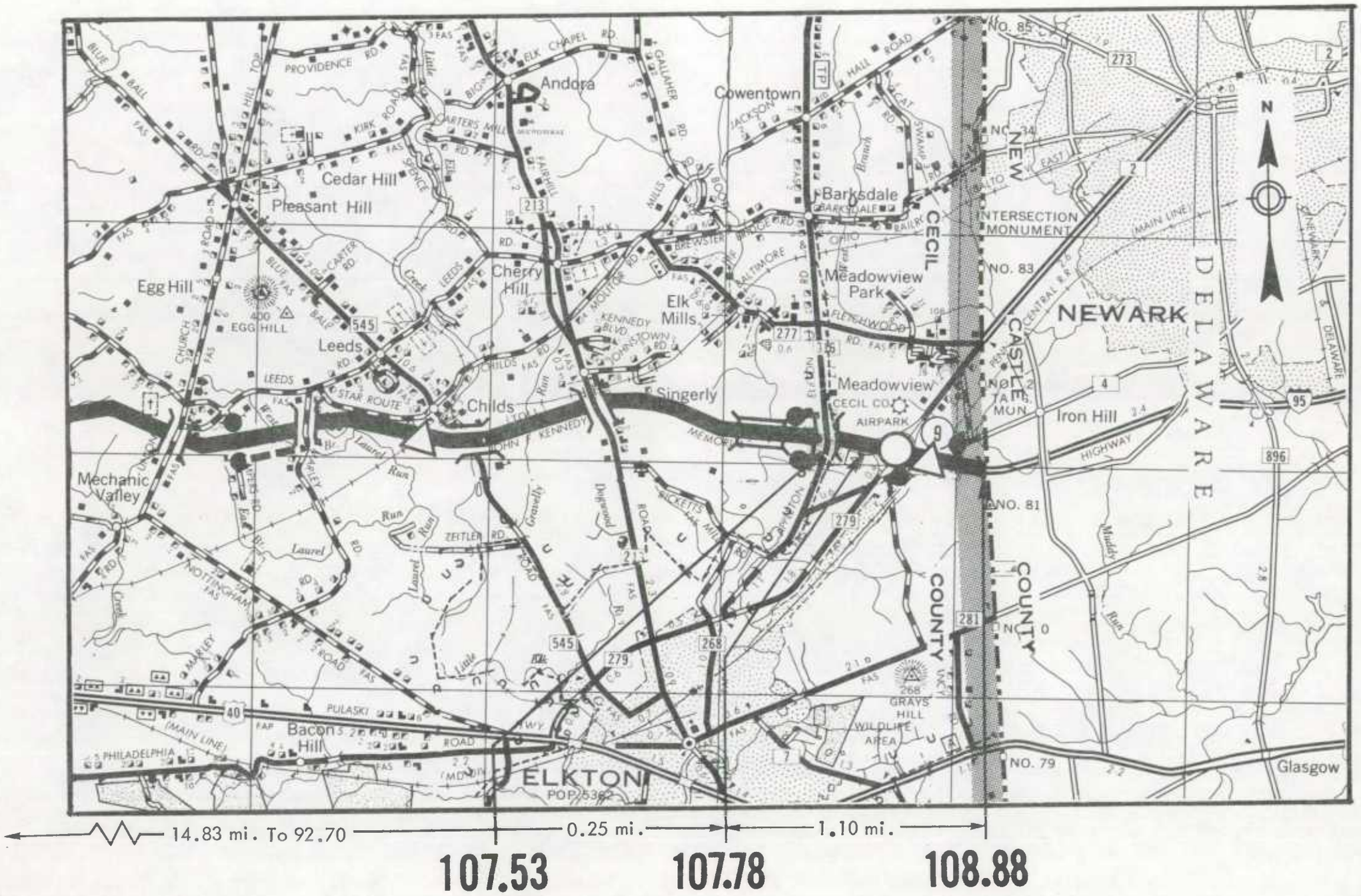

109.55
108.88
.67

INTERSTATE ROUTE 95

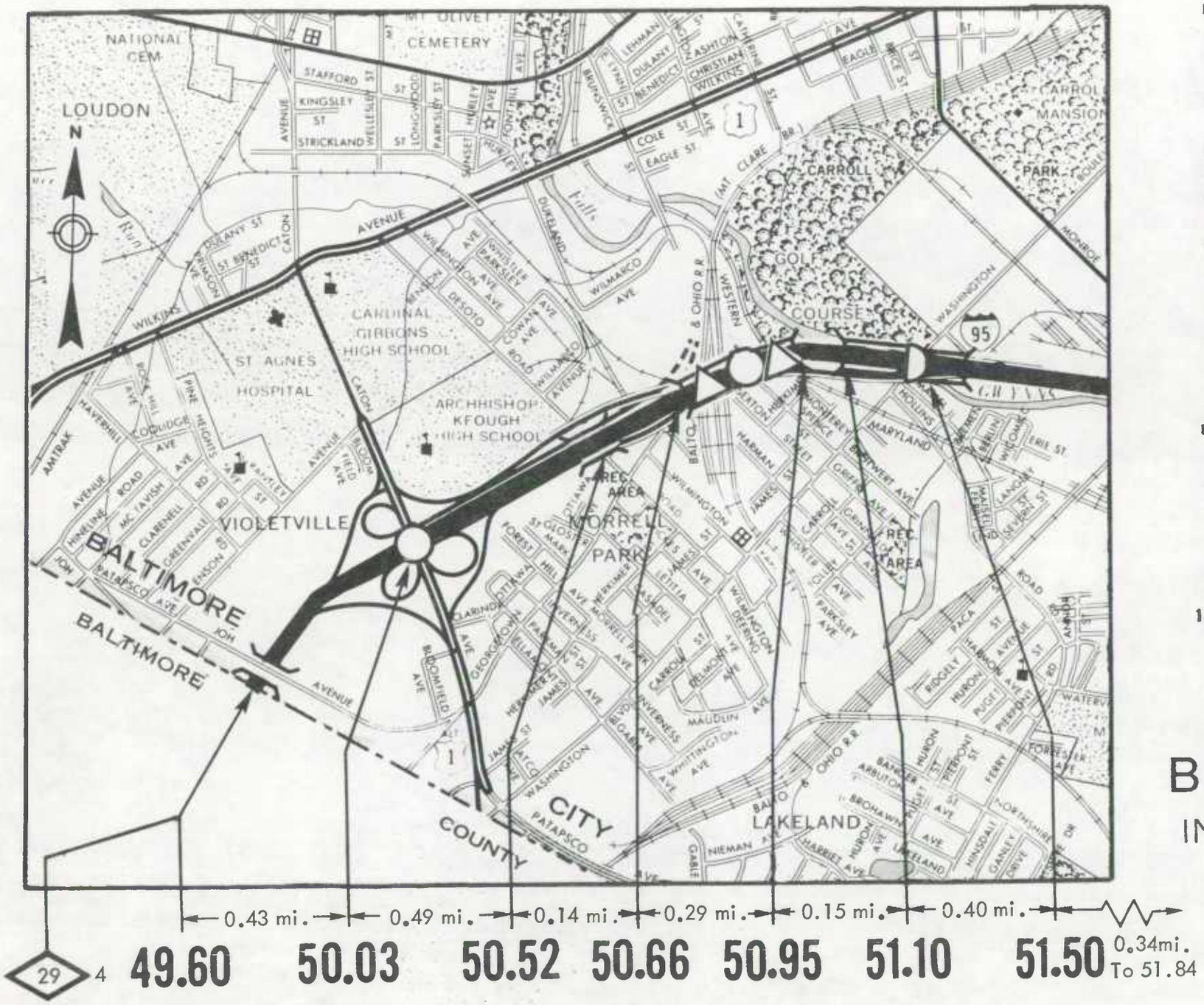

LEGEND

- Interstate Location Status 4 thru 1
- Interstate Location Status 5a(2) or 5a(3)
- Segments Approved Under Section 139 Title 23, USC, (non-chargeable).
- Interchange
- Highway Grade Separation -No Connection
- Railroad Grade Separation
- Combination Highway-Railroad Grade Separation
- Other Bridge
- Tunnel
- TOLL — Toll Bridge, Tunnel, Highway or Combination
- Frontage Road
- Terminated Cross Road
- Intersection At-Grade
- U U — Urban Area Boundary
- Safety Rest Area
- 13 — Post Mileage
- 1 2 — Route Sections
- 2.8 — Estimate Section Number

BALTIMORE CITY

INTERSTATE ROUTE 95

SHEET 1 OF 4

DATE: DECEMBER 31, 1985

SCALE: 1 INCH = 1500 FT.

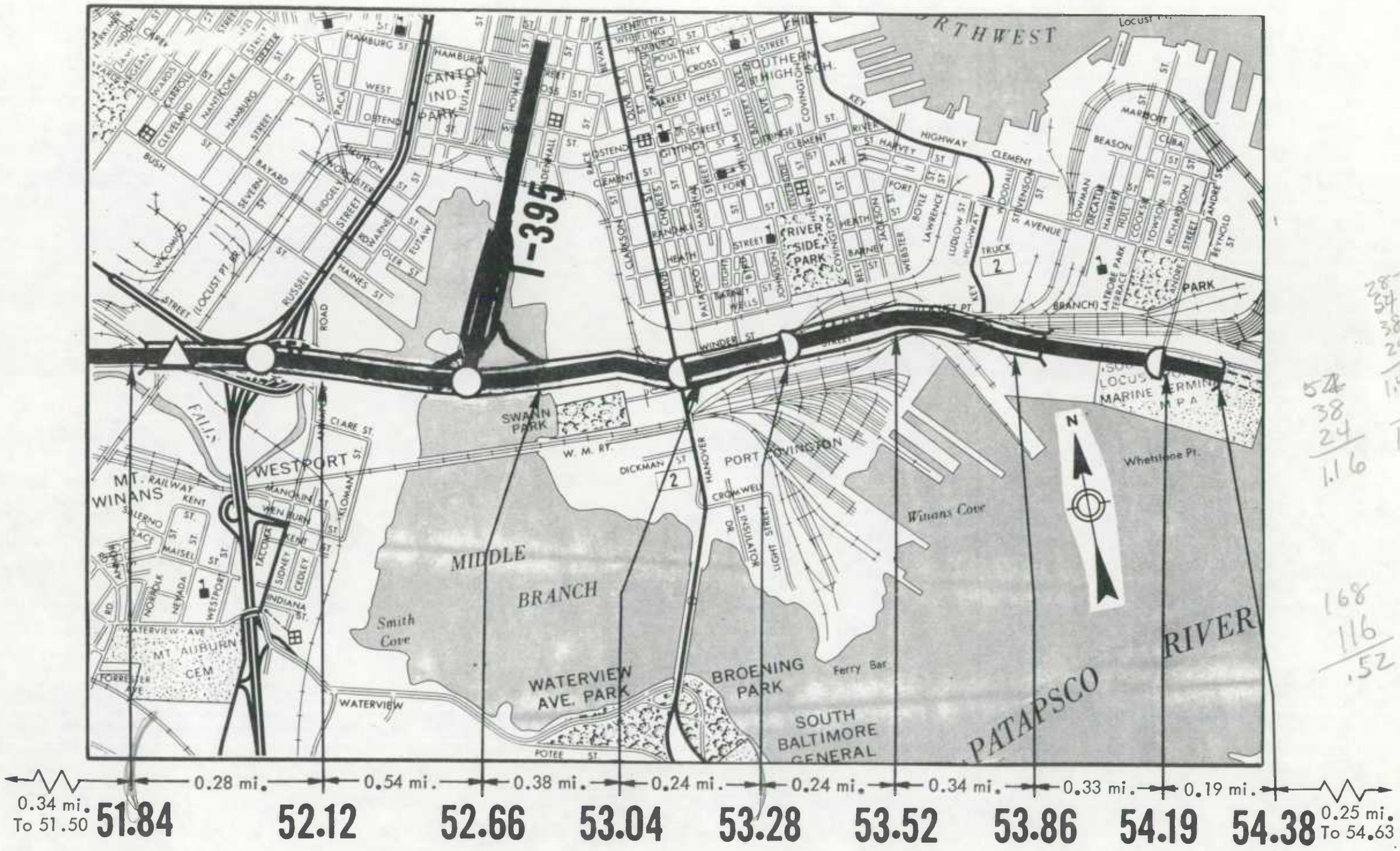

INTERSTATE ROUTE 95
(BALTIMORE CITY)
SHEET 2 OF 4

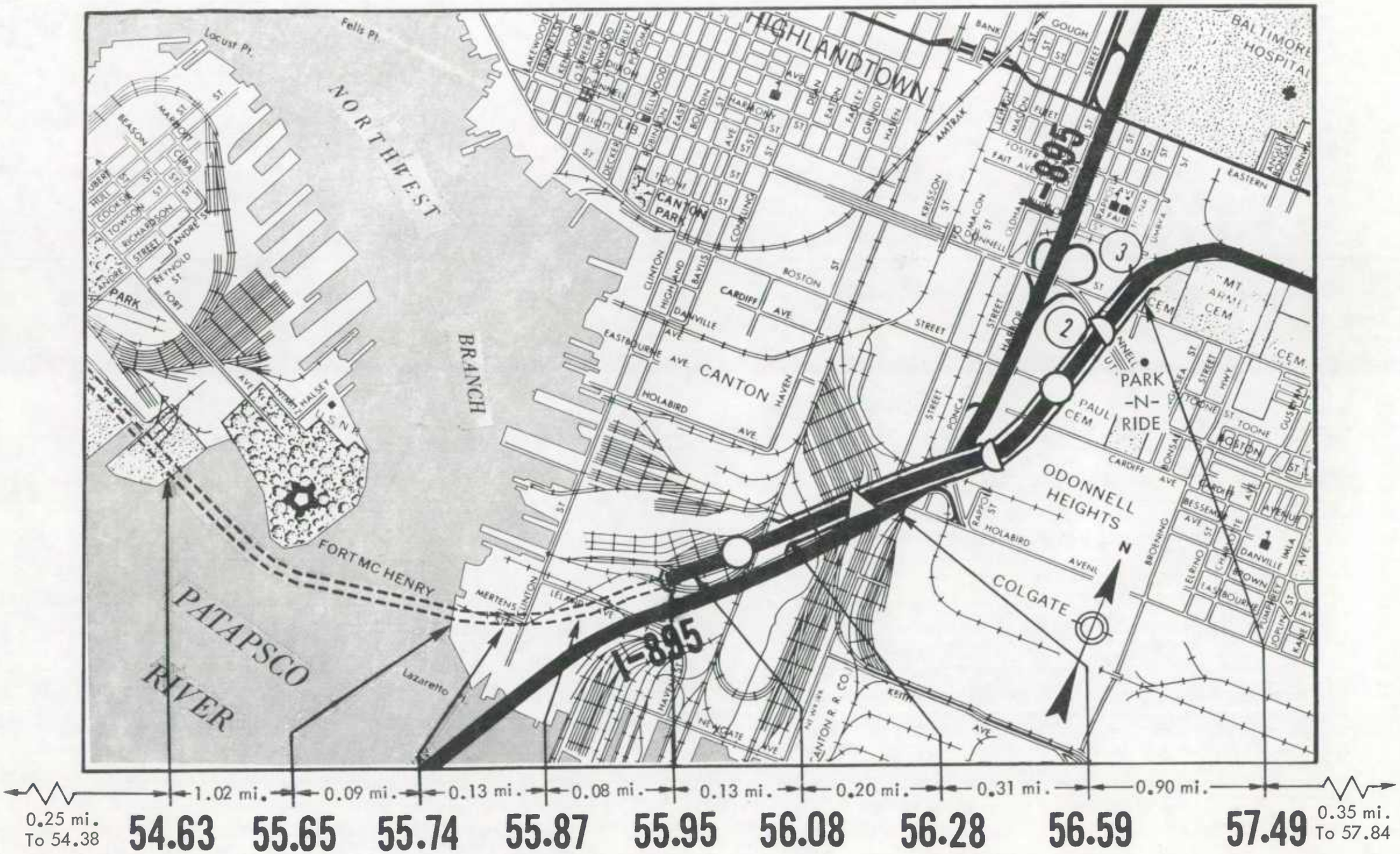

INTERSTATE ROUTE 95

(BALTIMORE CITY)

SHEET 3 OF 4

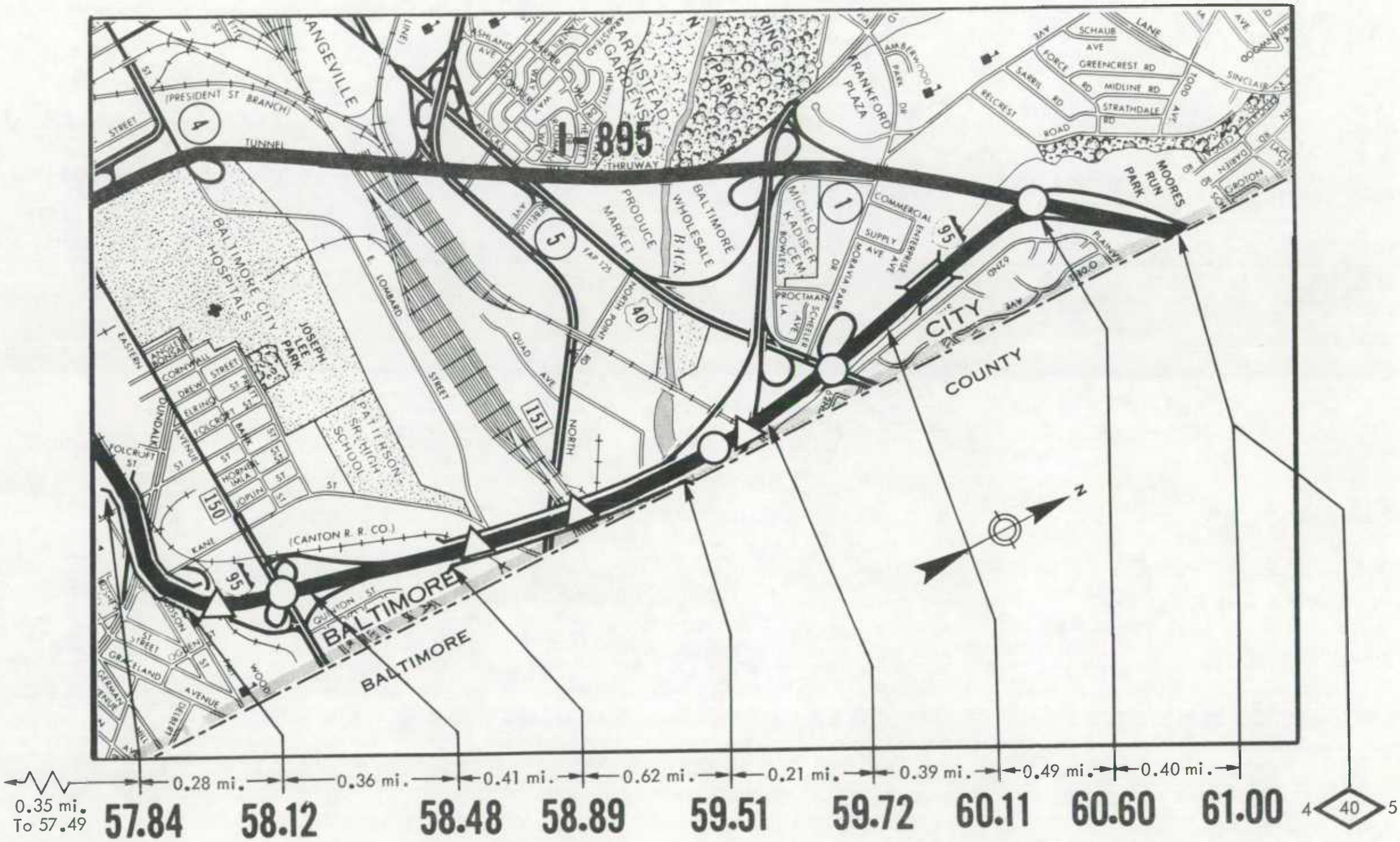

INTERSTATE ROUTE 95

(BALTIMORE CITY)

SHEET 4 OF 4

STATE: MARYLAND CODE: 24

ROUTE: 095

TABLE B - DESIGN CLASSIFICATION AND COST ESTIMATE BY ESTIMATE SECTIONS WITH ROUTE TOTALS

ITEM	ESTIMATE SECTION MILEPOST							TOTAL FOR ROUTE
	0.00	1.12	2.00	18.65	22.20	26.35	27.39	
1. FINANCE CODE	20	20	20	20	20	20	20	
2. SECTION LENGTH	1.12	0.88	16.65	3.55	4.15	1.04	1.44	
3. CLASS: RURAL (R) OR URBAN AREA I.D. (NAME AND CODE)	U	U	U	U	U	U	U	
	796	796	796	796	796	796	796	
	WASHINGTON	WASHINGTON	WASHINGTON	WASHINGTON	WASHINGTON	WASHINGTON	WASHINGTON	
4. MILEAGE INCREMENT: CODE(1,2, OR 3)	1	1	1	1	1	1	1	
5. ROUTE SIGNIFICANCE: CODE (N OR L)	N	N	N	N	N	N	N	
6. DESIGN SPEED (V)	60	60	60	60	60	60	70	
7. BASE YEAR TRAFFIC (1982 ADT)	114,200	118,800	118,800	118,800	127,600	85,250	85,250	
8. TRAFFIC A. DESIGN YEAR	1990	1990	1990	1990	1990	1992	1992	
B. ADT DESIGN YEAR	140,000	140,000	130,000	140,000	135,000	100,300	100,300	
C. DHV DESIGN YEAR	6,500	6,500	6,000	6,500	6,300	12,040	12,040	
D. DIRECTION DISTRIBUTION FACTOR	55	55	55	55	55	60	60	
E. T% TRUCKS DESIGN YEAR DHV	09	09	09	09	09	07	07	
F. T% TRUCKS DESIGN YEAR ADT	11	11	11	11	11	10	10	
9. NUMBER LANES TO BE CONSTRUCTED THIS ESTIMATE	00	00	00	00	00	00	00	
10. ULTIMATE NUMBER THROUGH TRAFFIC LANES	06	06	08	08	08	08	08	
11. TYPICAL CROSS-SECTION REFERENCE	332	308	316	316	314	316	316	
12. RIGHT-OF-WAY WIDTH: PREVAILING	1100	300	300	300	300	350	350	
13. MEDIAN WIDTH: PREVAILING	10	50	54	54	30	125	125	
14. STATUS OF DEVELOPMENT DEC. 31, 1983 (PR-511)	1A1F	1A1F	1A1F	1A1F	1A1F	2A1F	1A1F	
WORK CLASSIFICATION	ESTIMATED COSTS (1,000 DOLLARS)							
1. PRELIMINARY ENGINEERING	0	0	0	0	0	0	0	
2. R.O.W. A. ACQUISITION	0	0	0	0	0	0	0	
B. RELOCATION	0	0	0	0	0	0	0	
3. UTILITY ADJUSTMENTS	0	0	0	0	0	0	0	
4. EROSION CONTROL, CLEAR, GRUB, GRADE, DRAIN, & MINOR STRUCTURES	0	0	0	0	0	0	0	
5. SUBBASE,BASE, SURFACING, & SHOULDERS	0	0	0	0	0	0	0	
6. R.R. GRADE SEPARATIONS	0	0	0	0	0	0	0	
7. HIGHWAY GRADE SEPARATIONS WITHOUT RAMPS	0	0	0	0	0	0	0	
8. INTERCHANGES	0	0	0	0	0	0	0	
9. OTHER BRIDGES, TUNNELS, AND WALLS	0	0	0	0	0	0	0	
10. TRAFFIC CONTROL DEVICES	0	0	0	0	0	0	0	
11. WEIGH STATIONS, PEDESTRIAN AND BICYCLE FACILITIES	0	0	0	0	0	0	0	
12. SAFETY WORK ON COMPLETED SECTIONS	0	0	0	0	0	0	0	
13. NOISE ABATEMENT MEASURES	0	0	0	0	0	0	0	
14. ROADSIDE IMPROVEMENT A. LANDSCAPE PLANTING	0	0	0	0	0	0	0	
B. REST AREAS & OVERLOOKS	0	0	0	0	0	0	0	
15. ALL OTHER ITEMS: MAINT. OF TRAF., TRAINING, MOBIL, ETC.	0	0	0	0	0	0	0	
16. SUBTOTAL, LINES 4 THRU 15	0	0	0	0	0	0	0	
17. CONSTRUCTION ENGINEERING & CONTINGENCIES, 15% of LINE 16	0	0	0	0	0	0	0	
18. TOTAL COST OF CONSTRUCTION, LINES 16 & 17	0	0	0	0	0	0	0	
19. TOTAL ESTIMATE COST, LINES 1, 2, 3, & 18	0	0	0	0	0	0	0	

** ROUNDED TO ZERO

STATE: MARYLAND CODE: 24
ROUTE: 095

TABLE B - DESIGN CLASSIFICATION AND COST ESTIMATE BY ESTIMATE SECTIONS WITH ROUTE TOTALS

ITEM	ESTIMATE SECTION MILEPOST							TOTAL FOR ROUTE
	28.83	30.23	32.02	32.98	34.34	34.44	35.80	
1. FINANCE CODE	20	20	20	20	20	20	20	
2. SECTION LENGTH	1.40	1.79	0.96	1.36	0.10	1.36	2.16	
3. CLASS: RURAL (R) OR URBAN AREA I.D. (NAME AND CODE)	U	U	U	U	U	U	U	
	796	796	796	796	256	256	256	
	WASHINGTON	WASHINGTON	WASHINGTON	WASHINGTON	BALTIMORE	BALTIMORE	BALTIMORE	
4. MILEAGE INCREMENT: CODE(1,2, OR 3)	1	1	1	1	1	1	1	
5. ROUTE SIGNIFICANCE: CODE (N OR L)	N	N	N	N	N	N	N	
6. DESIGN SPEED (V)	70	70	70	70	70	70	70	
7. BASE YEAR TRAFFIC (1982 ADT)	78,100	78,100	78,100	70,785	70,785	70,785	70,785	
8. TRAFFIC A. DESIGN YEAR	1987	1987	1987	1987	1987	1987	1987	
B. ADT DESIGN YEAR	91,900	91,900	91,900	91,900	91,900	80,500	79,400	
C. DHV DESIGN YEAR	11,033	11,033	11,033	11,033	11,033	9,660	9,528	
D. DIRECTION DISTRIBUTION FACTOR	60	60	60	60	60	60	60	
E. T% TRUCKS DESIGN YEAR DHV	07	07	07	07	07	07	07	
F. T% TRUCKS DESIGN YEAR ADT	10	10	10	10	10	10	10	
9. NUMBER LANES TO BE CONSTRUCTED THIS ESTIMATE	00	00	00	00	00	00	00	
10. ULTIMATE NUMBER THROUGH TRAFFIC LANES	08	08	08	08	08	08	08	
11. TYPICAL CROSS-SECTION REFERENCE	316	316	316	316	316	316	316	
12. RIGHT-OF-WAY WIDTH: PREVAILING	350	350	350	350	350	350	350	
13. MEDIAN WIDTH: PREVAILING	125	120	125	100	100	150	100	
14. STATUS OF DEVELOPMENT DEC. 31, 1983 (PR-511)	1A1F	1A1F	1A1F	1A1F	1A1F	1A1F	1A1F	
WORK CLASSIFICATION	ESTIMATED COSTS (1,000 DOLLARS)							
1. PRELIMINARY ENGINEERING	0	0	0	0	0	0	0	
2. R.O.W. A. ACQUISITION	0	0	0	0	0	0	0	
B. RELOCATION	0	0	0	0	0	0	0	
3. UTILITY ADJUSTMENTS	0	0	0	0	0	0	0	
4. EROSION CONTROL, CLEAR, GRUB, GRADE, DRAIN, & MINOR STRUCTURES	0	0	0	0	0	0	0	
5. SUBBASE,BASE, SURFACING, & SHOULDERS	0	0	0	0	0	0	0	
6. R.R. GRADE SEPARATIONS	0	0	0	0	0	0	0	
7. HIGHWAY GRADE SEPARATIONS WITHOUT RAMPS	0	0	0	0	0	0	0	
8. INTERCHANGES	0	0	0	0	0	0	0	
9. OTHER BRIDGES, TUNNELS, AND WALLS	0	0	0	0	0	0	0	
10. TRAFFIC CONTROL DEVICES	0	0	0	0	0	0	0	
11. WEIGH STATIONS, PEDESTRIAN AND BICYCLE FACILITIES	0	0	0	0	0	0	0	
12. SAFETY WORK ON COMPLETED SECTIONS	0	0	0	0	0	0	0	
13. NOISE ABATEMENT MEASURES	0	0	0	0	0	0	0	
14. ROADSIDE IMPROVEMENT A. LANDSCAPE PLANTING	0	0	0	0	0	0	0	
B. REST AREAS & OVERLOOKS	0	0	0	0	0	0	0	
15. ALL OTHER ITEMS: MAINT. OF TRAF., TRAINING, MOBIL, ETC.	0	0	0	0	0	0	0	
16. SUBTOTAL, LINES 4 THRU 15	0	0	0	0	0	0	0	
17. CONSTRUCTION ENGINEERING & CONTINGENCIES, 15% of LINE 16	0	0	0	0	0	0	0	
18. TOTAL COST OF CONSTRUCTION, LINES 16 & 17	0	0	0	0	0	0	0	
19. TOTAL ESTIMATE COST, LINES 1, 2, 3, & 18	0	0	0	0	0	0	0	

** ROUNDED TO ZERO

STATE: MARYLAND CODE: 24

ROUTE: 095

TABLE B - DESIGN CLASSIFICATION AND COST ESTIMATE BY ESTIMATE SECTIONS WITH ROUTE TOTALS

ITEM	ESTIMATE SECTION MILEPOST							TOTAL FOR ROUTE
	37.96	39.21	40.81	41.43	43.35	45.90	46.07	
1. FINANCE CODE	20	20	20	20	20	20	20	
2. SECTION LENGTH	1.25	1.60	0.62	1.92	2.55	0.17	0.76	
3. CLASS: RURAL (R) OR URBAN AREA I.D. (NAME AND CODE)	U	U	U	U	U	U	U	
	256	256	256	256	256	256	256	
	BALTIMORE	BALTIMORE	BALTIMORE	BALTIMORE	BALTIMORE	BALTIMORE	BALTIMORE	
4. MILEAGE INCREMENT: CODE(1,2, OR 3)	1	1	1	1	1	1	1	
5. ROUTE SIGNIFICANCE: CODE (N OR L)	N	N	N	N	N	N	N	
6. DESIGN SPEED (V)	70	70	70	70	70	70	70	
7. BASE YEAR TRAFFIC (1982 ADT)	69,300	69,300	82,665	82,665	94,600	53,075	53,075	
8. TRAFFIC A. DESIGN YEAR	1987	1987	1987	1987	1987	1987	1987	
B. ADT DESIGN YEAR	89,300	89,300	91,900	91,900	76,100	76,100	76,100	
C. DHV DESIGN YEAR	10,716	10,716	11,028	11,028	9,132	9,132	9,132	
D. DIRECTION DISTRIBUTION FACTOR	60	60	60	60	60	60	60	
E. T% TRUCKS DESIGN YEAR DHV	07	07	07	07	07	07	07	
F. T% TRUCKS DESIGN YEAR ADT	10	10	10	10	10	10	10	
9. NUMBER LANES TO BE CONSTRUCTED THIS ESTIMATE	00	00	00	00	00	00	00	
10. ULTIMATE NUMBER THROUGH TRAFFIC LANES	08	08	08	08	08	08	08	
11. TYPICAL CROSS-SECTION REFERENCE	316	316	316	316	316	316	316	
12. RIGHT-OF-WAY WIDTH: PREVAILING	350	350	350	350	350	350	350	
13. MEDIAN WIDTH: PREVAILING	150	150	150	76	50	52	52	
14. STATUS OF DEVELOPMENT DEC. 31, 1983 (PR-511)	1A1F	1A1F	1A1F	1A1F	1A1F	1A1F	1A1F	
WORK CLASSIFICATION	ESTIMATED COSTS (1,000 DOLLARS)							
1. PRELIMINARY ENGINEERING	0	0	0	0	0	0	0	
2. R.O.W. A. ACQUISITION	0	0	0	0	0	0	0	
B. RELOCATION	0	0	0	0	0	0	0	
3. UTILITY ADJUSTMENTS	0	0	0	0	0	0	0	
4. EROSION CONTROL, CLEAR, GRUB, GRADE, DRAIN, & MINOR STRUCTURES	0	0	0	0	0	0	0	
5. SUBBASE,BASE, SURFACING, & SHOULDERS	0	0	0	0	0	0	0	
6. R.R. GRADE SEPARATIONS	0	0	0	0	0	0	0	
7. HIGHWAY GRADE SEPARATIONS WITHOUT RAMPS	0	0	0	0	0	0	0	
8. INTERCHANGES	0	0	0	0	0	0	0	
9. OTHER BRIDGES, TUNNELS, AND WALLS	0	0	0	0	0	0	0	
10. TRAFFIC CONTROL DEVICES	0	0	0	0	0	0	0	
11. WEIGH STATIONS , PEDESTRIAN AND BICYCLE FACILITIES	0	0	0	0	0	0	0	
12. SAFETY WORK ON COMPLETED SECTIONS	0	0	0	0	0	0	0	
13. NOISE ABATEMENT MEASURES	0	0	0	0	0	0	0	
14. ROADSIDE IMPROVEMENT A. LANDSCAPE PLANTING	0	0	0	0	0	0	0	
B. REST AREAS & OVERLOOKS	0	0	0	0	0	0	0	
15. ALL OTHER ITEMS: MAINT. OF TRAF., TRAINING, MOBIL, ETC.	0	0	0	0	0	0	0	
16. SUBTOTAL, LINES 4 THRU 15	0	0	0	0	0	0	0	
17. CONSTRUCTION ENGINEERING & CONTINGENCIES, 15% of LINE 16	0	0	0	0	0	0	0	
18. TOTAL COST OF CONSTRUCTION, LINES 16 & 17	0	0	0	0	0	0	0	
19. TOTAL ESTIMATE COST, LINES 1, 2, 3, & 18	0	0	0	0	0	0	0	

** ROUNDED TO ZERO

STATE: MARYLAND CODE: 24

ROUTE: 095

TABLE 2 - DESIGN CLASSIFICATION AND COST ESTIMATE BY ESTIMATE SECTIONS WITH ROUTE TOTALS

ITEM	ESTIMATE SECTION MILEPOST							TOTAL FOR ROUTE
	46.83	47.37	48.78	49.60	50.03	50.52	50.66	
1. FINANCE CODE	20	20	20	20	20	20	20	
2. SECTION LENGTH	0.54	1.41	0.82	0.43	0.49	0.14	0.29	
3. CLASS: RURAL (R) OR URBAN AREA I.D. (NAME AND CODE)	U	U	U	U	U	U	U	
	256	256	256	256	256	256	256	
	BALTIMORE	BALTIMORE	BALTIMORE	BALTIMORE	BALTIMORE	BALTIMORE	BALTIMORE	
4. MILEAGE INCREMENT: CODE(1,2, OR 3)	1	1	1	1	1	1	1	
5. ROUTE SIGNIFICANCE: CODE (N OR L)	N	N	N	N	N	N	N	
6. DESIGN SPEED (V)	70	70	70	60	60	60	60	
7. BASE YEAR TRAFFIC (1982 ADT)	53,900	48,400	44,000	143,316	118,175	118,175	118,175	
8. TRAFFIC A. DESIGN YEAR	1987	1987	1987	1990	1994	1994	1994	
B. ADT DESIGN YEAR	99,000	99,000	99,000	140,710	120,324	120,324	120,324	
C. DHV DESIGN YEAR	11,880	11,880	11,880	16,885	14,439	14,439	14,439	
D. DIRECTION DISTRIBUTION FACTOR	60	60	60	55	55	55	55	
E. T% TRUCKS DESIGN YEAR DHV	07	07	07	11	11	11	11	
F. T% TRUCKS DESIGN YEAR ADT	10	10	10	17	17	17	17	
9. NUMBER LANES TO BE CONSTRUCTED THIS ESTIMATE	00	00	00	00	00	00	00	
10. ULTIMATE NUMBER THROUGH TRAFFIC LANES	08	08	08	08	08	08	08	
11. TYPICAL CROSS-SECTION REFERENCE	316	316	315	344	344	342	349	
12. RIGHT-OF-WAY WIDTH: PREVAILING	350	350	350	350	350	350	350	
13. MEDIAN WIDTH: PREVAILING	52	52	150	34	34	34	34	
14. STATUS OF DEVELOPMENT DEC. 31, 1983 (PR-511)	1A1F	1A1F	1A1F	1A1F	1A1F	1A1F	1A1F	
WORK CLASSIFICATION	ESTIMATED COSTS (1,000 DOLLARS)							
1. PRELIMINARY ENGINEERING	0	0	0	0	0	0	0	
2. R.O.W. A. ACQUISITION	0	0	0	0	0	0	0	
B. RELOCATION	0	0	0	0	0	0	0	
3. UTILITY ADJUSTMENTS	0	0	0	0	0	0	0	
4. EROSION CONTROL, CLEAR, GRUB, GRADE, DRAIN, & MINOR STRUCTURES	0	0	0	0	0	0	0	
5. SUBBASE,BASE, SURFACING, & SHOULDERS	0	0	0	0	0	0	0	
6. R.R. GRADE SEPARATIONS	0	0	0	0	0	0	0	
7. HIGHWAY GRADE SEPARATIONS WITHOUT RAMPS	0	0	0	0	0	0	0	
8. INTERCHANGES	0	0	0	0	0	0	0	
9. OTHER BRIDGES, TUNNELS, AND WALLS	0	0	0	0	0	0	0	
10. TRAFFIC CONTROL DEVICES	0	0	0	0	0	0	0	
11. WEIGH STATIONS, PEDESTRIAN AND BICYCLE FACILITIES	0	0	0	0	0	0	0	
12. SAFETY WORK ON COMPLETED SECTIONS	0	0	0	0	0	0	0	
13. NOISE ABATEMENT MEASURES	0	0	0	0	0	0	0	
14. ROADSIDE IMPROVEMENT A. LANDSCAPE PLANTING	0	0	0	0	0	0	0	
B. REST AREAS & OVERLOOKS	0	0	0	0	0	0	0	
15. ALL OTHER ITEMS: MAINT. OF TRAF., TRAINING, MOBIL, ETC.	0	0	0	0	0	0	0	
16. SUBTOTAL, LINES 4 THRU 15	0	0	0	0	0	0	0	
17. CONSTRUCTION ENGINEERING & CONTINGENCIES, 15% of LINE 16	0	0	0	0	0	0	0	
18. TOTAL COST OF CONSTRUCTION, LINES 16 & 17	0	0	0	0	0	0	0	
19. TOTAL ESTIMATE COST, LINES 1, 2, 3, & 18	0	0	0	0	0	0	0	

** ROUNDED TO ZERO

STATE: MARYLAND CODE: 24

ROUTE: 395

TABLE 2 - DESIGN CLASSIFICATION AND COST ESTIMATE BY ESTIMATE SECTIONS WITH ROUTE TOTALS

ITEM	ESTIMATE SECTION MILEPOST							TOTAL FOR ROUTE
	50.95	51.10	51.50	51.84	52.12	52.66	53.04	
1. FINANCE CODE	20	20	20	20	20	20	21	
2. SECTION LENGTH	0.15	0.40	0.34	0.28	0.54	0.38	0.24	
3. CLASS: RURAL (R) OR URBAN AREA I.D. (NAME AND CODE)	U	U	U	U	U	U	U	
	256	256	256	256	256	256	256	
	BALTIMORE	BALTIMORE	BALTIMORE	BALTIMORE	BALTIMORE	BALTIMORE	BALTIMORE	
4. MILEAGE INCREMENT: CODE(1,2, OR 3)	1	1	1	1	1	1	1	
5. ROUTE SIGNIFICANCE: CODE (N OR L)	N	N	N	N	N	N	N	
6. DESIGN SPEED (V)	60	60	60	60	60	60	60	
7. BASE YEAR TRAFFIC (1982 ADT)	118,175	118,175	110,000	110,000	110,328	88,371	70,683	
8. TRAFFIC A. DESIGN YEAR	1994	1994	1994	1995	1996	1997	1998	
B. ADT DESIGN YEAR	120,324	120,324	112,000	113,000	114,337	92,388	74,538	
C. DHV DESIGN YEAR	14,439	14,439	13,440	13,560	13,720	11,087	8,945	
D. DIRECTION DISTRIBUTION FACTOR	55	55	55	55	55	55	55	
E. T% TRUCKS DESIGN YEAR DHV	11	11	11	11	11	11	11	
F. T% TRUCKS DESIGN YEAR ADT	17	17	17	17	17	17	17	
9. NUMBER LANES TO BE CONSTRUCTED THIS ESTIMATE	00	00	00	00	00	00	00	
10. ULTIMATE NUMBER THROUGH TRAFFIC LANES	08	08	08	08	08	08	08	
11. TYPICAL CROSS-SECTION REFERENCE	342	342	349	349	349	349	349	
12. RIGHT-OF-WAY WIDTH: PREVAILING	350	350	400	400	400	400	400	
13. MEDIAN WIDTH: PREVAILING	34	34	34	34	34	34	34	
14. STATUS OF DEVELOPMENT DEC. 31, 1983 (PR-511)	1A1F	1A1F	1A1F	1A1F	1A1F	1A1F	1A3F	
WORK CLASSIFICATION	ESTIMATED COSTS (1,000 DOLLARS)							
1. PRELIMINARY ENGINEERING	0	0	0	0	0	0	0	
2. R.O.W. A. ACQUISITION	0	0	0	0	0	0	0	
B. RELOCATION	0	0	0	0	0	0	0	
3. UTILITY ADJUSTMENTS	0	0	0	0	0	0	0	
4. EROSION CONTROL, CLEAR, GRUB, GRADE, DRAIN, & MINOR STRUCTURES	0	0	0	0	0	0	0	
5. SUBBASE,BASE, SURFACING, & SHOULDERS	0	0	0	0	0	0	0	
6. R.R. GRADE SEPARATIONS	0	0	0	0	0	0	0	
7. HIGHWAY GRADE SEPARATIONS WITHOUT RAMPS	0	0	0	0	0	0	0	
8. INTERCHANGES	0	0	0	0	0	0	0	
9. OTHER BRIDGES, TUNNELS, AND WALLS	0	0	0	0	0	0	0	
10. TRAFFIC CONTROL DEVICES	0	0	0	0	0	0	0	
11. WEIGH STATIONS, PEDESTRIAN AND BICYCLE FACILITIES	0	0	0	0	0	0	0	
12. SAFETY WORK ON COMPLETED SECTIONS	0	0	0	0	0	0	0	
13. NOISE ABATEMENT MEASURES	0	0	0	0	0	0	352	
14. ROADSIDE IMPROVEMENT A. LANDSCAPE PLANTING	0	0	0	0	0	0	0	
B. REST AREAS & OVERLOOKS	0	0	0	0	0	0	0	
15. ALL OTHER ITEMS: MAINT. OF TRAF., TRAINING, MOBIL, ETC.	0	0	0	0	0	0	0	
16. SUBTOTAL, LINES 4 THRU 15	0	0	0	0	0	0	352	
17. CONSTRUCTION ENGINEERING & CONTINGENCIES, 15% of LINE 16	0	0	0	0	0	0	53	
18. TOTAL COST OF CONSTRUCTION, LINES 16 & 17	0	0	0	0	0	0	405	
19. TOTAL ESTIMATE COST, LINES 1, 2, 3, & 18	0	0	0	0	0	0	405	

** ROUNDED TO ZERO

STATE: MARYLAND CODE: 24
ROUTE: 695

TABLE B - DESIGN CLASSIFICATION AND COST ESTIMATE BY ESTIMATE SECTIONS WITH ROUTE TOTALS

ITEM	ESTIMATE SECTION MILEPOST							TOTAL FOR ROUTE
	53.23	53.52	53.86	54.19	54.38	54.63	55.65	
1. FINANCE CODE	20	20	20	20	20	20	20	
2. SECTION LENGTH	0.24	0.34	0.33	0.19	0.25	1.02	0.09	
3. CLASS: RURAL (R) OR URBAN AREA I.D. (NAME AND CODE)	U	U	U	U	U	U	U	
	256	256	256	256	256	256	256	
	BALTIMORE	BALTIMORE	BALTIMORE	BALTIMORE	BALTIMORE	BALTIMORE	BALTIMORE	
4. MILEAGE INCREMENT: CODE(1,2, OR 3)	1	1	1	1	1	1	1	
5. ROUTE SIGNIFICANCE: CODE (N OR L)	N	N	N	N	N	N	N	
6. DESIGN SPEED (V)	60	60	60	60	60	60	60	
7. BASE YEAR TRAFFIC (1982 ADT)	65,759	65,759	69,898	69,898	69,898	69,898	69,898	
8. TRAFFIC A. DESIGN YEAR	1998	1998	2000	2000	2000	2000	2000	
B. ADT DESIGN YEAR	69,346	69,346	74,982	74,982	74,982	74,982	74,982	
C. DHV DESIGN YEAR	8,322	8,322	8,998	8,998	8,998	8,998	8,998	
D. DIRECTION DISTRIBUTION FACTOR	55	55	55	55	55	55	55	
E. T% TRUCKS DESIGN YEAR DHV	11	11	11	11	11	11	11	
F. T% TRUCKS DESIGN YEAR ADT	17	17	17	17	17	17	17	
9. NUMBER LANES TO BE CONSTRUCTED THIS ESTIMATE	00	00	00	00	00	00	00	
10. ULTIMATE NUMBER THROUGH TRAFFIC LANES	08	08	08	08	08	08	08	
11. TYPICAL CROSS-SECTION REFERENCE	349	349	342	364	366	366	366	
12. RIGHT-OF-WAY WIDTH: PREVAILING	400	400	400	300	300	300	300	
13. MEDIAN WIDTH: PREVAILING	34	34	34	34	34	34	34	
14. STATUS OF DEVELOPMENT DEC. 31, 1983 (PR-511)	1A1F	1A1F	1A1F	1A1F	1A1F	1A1F	1A1F	
WORK CLASSIFICATION	ESTIMATED COSTS (1,000 DOLLARS)							
1. PRELIMINARY ENGINEERING	0	0	0	0	0	0	0	
2. R.O.W. A. ACQUISITION	0	0	0	0	0	0	0	
B. RELOCATION	0	0	0	0	0	0	0	
3. UTILITY ADJUSTMENTS	0	0	0	0	0	0	0	
4. EROSION CONTROL, CLEAR, GRUB, GRADE, DRAIN, & MINOR STRUCTURES	0	0	0	0	0	0	0	
5. SUBBASE,BASE, SURFACING, & SHOULDERS	0	0	0	0	0	0	0	
6. R.R. GRADE SEPARATIONS	0	0	0	0	0	0	0	
7. HIGHWAY GRADE SEPARATIONS WITHOUT RAMPS	0	0	0	0	0	0	0	
8. INTERCHANGES	0	0	0	0	0	0	0	
9. OTHER BRIDGES, TUNNELS, AND WALLS	0	0	0	0	0	0	0	
10. TRAFFIC CONTROL DEVICES	0	0	0	0	0	0	0	
11. WEIGH STATIONS, PEDESTRIAN AND BICYCLE FACILITIES	0	0	0	0	0	0	0	
12. SAFETY WORK ON COMPLETED SECTIONS	0	0	0	0	0	0	0	
13. NOISE ABATEMENT MEASURES	0	0	0	0	0	0	0	
14. ROADSIDE IMPROVEMENT A. LANDSCAPE PLANTING	0	0	0	0	0	0	0	
B. REST AREAS & OVERLOOKS	0	0	0	0	0	0	0	
15. ALL OTHER ITEMS: MAINT. OF TRAF., TRAINING, MOBIL, ETC.	0	0	0	0	0	0	0	
16. SUBTOTAL, LINES 4 THRU 15	0	0	0	0	0	0	0	
17. CONSTRUCTION ENGINEERING & CONTINGENCIES, 15% of LINE 16	0	0	0	0	0	0	0	
18. TOTAL COST OF CONSTRUCTION, LINES 16 & 17	0	0	0	0	0	0	0	
19. TOTAL ESTIMATE COST, LINES 1, 2, 3, & 18	0	0	0	0	0	0	0	

** ROUNDED TO ZERO

STATE: MARYLAND CODE: 24

ROUTE: 095

TABLE B - DESIGN CLASSIFICATION AND COST ESTIMATE BY ESTIMATE SECTIONS WITH ROUTE TOTALS

ITEM	ESTIMATE SECTION MILEPOST							TOTAL FOR ROUTE
	55.74	55.87	55.95	56.08	56.23	56.59	57.49	
1. FINANCE CODE	20	20	20	20	20	20	21	
2. SECTION LENGTH	0.13	0.08	0.13	0.20	0.31	0.90	0.35	
3. CLASS: RURAL (R) OR URBAN AREA I.D. (NAME AND CODE)	U	U	U	U	U	U	U	
	256	256	256	256	256	256	256	
	BALTIMORE	BALTIMORE	BALTIMORE	BALTIMORE	BALTIMORE	BALTIMORE	BALTIMORE	
4. MILEAGE INCREMENT: CODE(1,2, OR 3)	1	1	1	1	1	1	1	
5. ROUTE SIGNIFICANCE: CODE (N OR L)	N	N	N	N	N	N	N	
6. DESIGN SPEED (V)	60	60	60	60	60	60	60	
7. BASE YEAR TRAFFIC (1982 ADT)	69,898	62,957	69,557	69,557	69,557	69,557	80,633	
8. TRAFFIC A. DESIGN YEAR	2000	1998	1998	1998	1996	1996	1994	
B. ADT DESIGN YEAR	74,982	66,391	73,351	73,351	73,351	82,099	80,633	
C. DHV DESIGN YEAR	8,998	7,967	8,802	8,802	8,802	9,852	9,676	
D. DIRECTION DISTRIBUTION FACTOR	55	55	55	55	55	55	55	
E. T% TRUCKS DESIGN YEAR DHV	11	11	11	11	11	11	11	
F. T% TRUCKS DESIGN YEAR ADT	17	17	17	17	17	17	17	
9. NUMBER LANES TO BE CONSTRUCTED THIS ESTIMATE	00	00	00	00	00	00	00	
10. ULTIMATE NUMBER THROUGH TRAFFIC LANES	08	08	08	08	08	08	08	
11. TYPICAL CROSS-SECTION REFERENCE	367	367	367	367	351	349	342	
12. RIGHT-OF-WAY WIDTH: PREVAILING	300	300	300	350	350	350	350	
13. MEDIAN WIDTH: PREVAILING	34	34	34	34	34	34	34	
14. STATUS OF DEVELOPMENT DEC. 31, 1983 (PR-511)	1A1F	1A1F	1A1F	1A1F	1A1F	1A1F	1A3F	
WORK CLASSIFICATION	ESTIMATED COSTS (1,000 DOLLARS)							
1. PRELIMINARY ENGINEERING	0	0	0	0	0	0	0	
2. R.O.W. A. ACQUISITION	0	0	0	0	0	0	0	
B. RELOCATION	0	0	0	0	0	0	0	
3. UTILITY ADJUSTMENTS	0	0	0	0	0	0	0	
4. EROSION CONTROL, CLEAR, GRUB, GRADE, DRAIN, & MINOR STRUCTURES	0	0	0	0	0	0	0	
5. SUBBASE,BASE, SURFACING, & SHOULDERS	0	0	0	0	0	0	0	
6. R.R. GRADE SEPARATIONS	0	0	0	0	0	0	0	
7. HIGHWAY GRADE SEPARATIONS WITHOUT RAMPS	0	0	0	0	0	0	0	
8. INTERCHANGES	0	0	0	0	0	0	0	
9. OTHER BRIDGES, TUNNELS, AND WALLS	0	0	0	0	0	0	0	
10. TRAFFIC CONTROL DEVICES	0	0	0	0	0	0	0	
11. WEIGH STATIONS, PEDESTRIAN AND BICYCLE FACILITIES	0	0	0	0	0	0	0	
12. SAFETY WORK ON COMPLETED SECTIONS	0	0	0	0	0	0	0	
13. NOISE ABATEMENT MEASURES	0	0	0	0	0	0	308	
14. ROADSIDE IMPROVEMENT A. LANDSCAPE PLANTING	0	0	0	0	0	0	0	
B. REST AREAS & OVERLOOKS	0	0	0	0	0	0	0	
15. ALL OTHER ITEMS: MAINT. OF TRAF., TRAINING, MOBIL, ETC.	0	0	0	0	0	0	0	
16. SUBTOTAL, LINES 4 THRU 15	0	0	0	0	0	0	308	
17. CONSTRUCTION ENGINEERING & CONTINGENCIES, 15% of LINE 16	0	0	0	0	0	0	46	
18. TOTAL COST OF CONSTRUCTION, LINES 16 & 17	0	0	0	0	0	0	354	
19. TOTAL ESTIMATE COST, LINES 1, 2, 3, & 18	0	0	0	0	0	0	354	

** ROUNDED TO ZERO

STATE: MARYLAND CODE: 24

ROUTE: 095

TABLE 8 - DESIGN CLASSIFICATION AND COST ESTIMATE BY ESTIMATE SECTIONS WITH ROUTE TOTALS

ITEM	ESTIMATE SECTION MILEPOST							TOTAL FOR ROUTE
	57.84	58.12	58.48	58.89	59.51	59.72	60.11	
1. FINANCE CODE	20	20	20	20	20	20	20	
2. SECTION LENGTH	0.28	0.36	0.41	0.62	0.21	0.39	0.49	
3. CLASS: RURAL (R) OR URBAN AREA I.D. (NAME AND CODE)	U	U	U	U	U	U	U	
	256	256	256	256	256	256	256	
	BALTIMORE	BALTIMORE	BALTIMORE	BALTIMORE	BALTIMORE	BALTIMORE	BALTIMORE	
4. MILEAGE INCREMENT: CODE(1,2, OR 3)	1	1	1	1	1	1	1	
5. ROUTE SIGNIFICANCE: CODE (N OR L)	N	N	N	N	N	N	N	
6. DESIGN SPEED (V)	60	60	60	60	60	60	60	
7. BASE YEAR TRAFFIC (1982 ADT)	80,633	71,500	60,500	71,500	55,000	55,000	49,500	
8. TRAFFIC A. DESIGN YEAR	1990	1990	1990	1990	1990	1990	1990	
B. ADT DESIGN YEAR	70,200	59,400	70,200	54,000	54,000	48,600	48,600	
C. DHV DESIGN YEAR	8,424	7,128	8,424	6,480	6,480	5,832	5,832	
D. DIRECTION DISTRIBUTION FACTOR	55	55	55	55	55	55	55	
E. T% TRUCKS DESIGN YEAR DHV	11	11	11	11	11	11	11	
F. T% TRUCKS DESIGN YEAR ADT	17	17	17	17	17	17	17	
9. NUMBER LANES TO BE CONSTRUCTED THIS ESTIMATE	00	00	00	00	00	00	00	
10. ULTIMATE NUMBER THROUGH TRAFFIC LANES	08	08	08	08	08	08	08	
11. TYPICAL CROSS-SECTION REFERENCE	342	342	342	349	342	342	343	
12. RIGHT-OF-WAY WIDTH: PREVAILING	350	350	400	400	500	500	500	
13. MEDIAN WIDTH: PREVAILING	34	34	34	34	34	34	34	
14. STATUS OF DEVELOPMENT DEC. 31, 1983 (PR-511)	1A1F	1A1F	1A1F	1A1F	1A1F	1A1F	1A1F	
WORK CLASSIFICATION	ESTIMATED COSTS (1,000 DOLLARS)							
1. PRELIMINARY ENGINEERING	0	0	0	0	0	0	0	
2. R.O.W. A. ACQUISITION	0	0	0	0	0	0	0	
B. RELOCATION	0	0	0	0	0	0	0	
3. UTILITY ADJUSTMENTS	0	0	0	0	0	0	0	
4. EROSION CONTROL, CLEAR, GRUB, GRADE, DRAIN, & MINOR STRUCTURES	0	0	0	0	0	0	0	
5. SUBBASE,BASE, SURFACING, & SHOULDERS	0	0	0	0	0	0	0	
6. R.R. GRADE SEPARATIONS	0	0	0	0	0	0	0	
7. HIGHWAY GRADE SEPARATIONS WITHOUT RAMPS	0	0	0	0	0	0	0	
8. INTERCHANGES	0	0	0	0	0	0	0	
9. OTHER BRIDGES, TUNNELS, AND WALLS	0	0	0	0	0	0	0	
10. TRAFFIC CONTROL DEVICES	0	0	0	0	0	0	0	
11. WEIGH STATIONS, PEDESTRIAN AND BICYCLE FACILITIES	0	0	0	0	0	0	0	
12. SAFETY WORK ON COMPLETED SECTIONS	0	0	0	0	0	0	0	
13. NOISE ABATEMENT MEASURES	0	0	0	0	0	0	0	
14. ROADSIDE IMPROVEMENT A. LANDSCAPE PLANTING	0	0	0	0	0	0	0	
B. REST AREAS & OVERLOOKS	0	0	0	0	0	0	0	
15. ALL OTHER ITEMS: MAINT. OF TRAF., TRAINING, MOBIL, ETC.	0	0	0	0	0	0	0	
16. SUBTOTAL, LINES 4 THRU 15	0	0	0	0	0	0	0	
17. CONSTRUCTION ENGINEERING & CONTINGENCIES, 15% of LINE 18	0	0	0	0	0	0	0	
18. TOTAL COST OF CONSTRUCTION, LINES 18 & 17	0	0	0	0	0	0	0	
19. TOTAL ESTIMATE COST, LINES 1, 2, 3, & 18	0	0	0	0	0	0	0	

** ROUNDED TO ZERO

STATE: MARYLAND CODE: 24

ROUTE: 095

TABLE 8 - DESIGN CLASSIFICATION AND COST ESTIMATE BY ESTIMATE SECTIONS WITH ROUTE TOTALS

ITEM	ESTIMATE SECTION MILEPOST							TOTAL FOR ROUTE
	60.60	61.00	63.18	64.45	66.58	69.86	75.38	
1. FINANCE CODE	20	20	20	20	10	10	10	
2. SECTION LENGTH	0.40	2.18	1.27	2.13	3.28	5.52	2.17	
3. CLASS: RURAL (R) OR URBAN AREA I.D. (NAME AND CODE)	U	U	U	U	U	R	U	
	256	256	256	256	256		256	
	BALTIMORE	BALTIMORE	BALTIMORE	BALTIMORE	BALTIMORE		BALTIMORE	
4. MILEAGE INCREMENT: CODE(1,2, OR 3)	1	1	1	1	1	1	1	
5. ROUTE SIGNIFICANCE: CODE (N OR L)	N	N	N	N	N	N	N	
6. DESIGN SPEED (V)	60	70	70	70	70	70	70	
7. BASE YEAR TRAFFIC (1982 ADT)	49,500	73,700	73,700	73,700	62,700	62,700	62,700	
8. TRAFFIC A. DESIGN YEAR	1990	1975	1975	1975	1975	1975	1975	
B. ADT DESIGN YEAR	37,900	32,900	32,800	32,800	40,950	39,150	39,150	
C. DHV DESIGN YEAR	4,548	3,619	3,608	3,608	4,504	4,504	4,504	
D. DIRECTION DISTRIBUTION FACTOR	55	55	55	55	55	55	55	
E. T% TRUCKS DESIGN YEAR DHV	11	09	10	10	10	10	10	
F. T% TRUCKS DESIGN YEAR ADT	17	11	12	12	12	12	12	
9. NUMBER LANES TO BE CONSTRUCTED THIS ESTIMATE	00	00	00	00	00	00	00	
10. ULTIMATE NUMBER THROUGH TRAFFIC LANES	08	08	08	08	08	08	08	
11. TYPICAL CROSS-SECTION REFERENCE	343	313	307	307	308	308	308	
12. RIGHT-OF-WAY WIDTH: PREVAILING	500	378	300	300	400	300	300	
13. MEDIAN WIDTH: PREVAILING	34	26	54	54	52	52	52	
14. STATUS OF DEVELOPMENT DEC. 31, 1983 (PR-511)	1A1F	1A1F	1A1F	1A1F	681	681	681	
WORK CLASSIFICATION	ESTIMATED COSTS (1,000 DOLLARS)							
1. PRELIMINARY ENGINEERING	0	0	0	0	0	0	0	
2. R.O.W. A. ACQUISITION	0	0	0	0	0	0	0	
B. RELOCATION	0	0	0	0	0	0	0	
3. UTILITY ADJUSTMENTS	0	0	0	0	0	0	0	
4. EROSION CONTROL, CLEAR, GRUB, GRADE, DRAIN, & MINOR STRUCTURES	0	0	0	0	0	0	0	
5. SUBBASE,BASE, SURFACING, & SHOULDERS	0	0	0	0	0	0	0	
6. R.R. GRADE SEPARATIONS	0	0	0	0	0	0	0	
7. HIGHWAY GRADE SEPARATIONS WITHOUT RAMPS	0	0	0	0	0	0	0	
8. INTERCHANGES	0	0	0	0	0	0	0	
9. OTHER BRIDGES, TUNNELS, AND WALLS	0	0	0	0	0	0	0	
10. TRAFFIC CONTROL DEVICES	0	0	0	0	0	0	0	
11. WEIGH STATIONS, PEDESTRIAN AND BICYCLE FACILITIES	0	0	0	0	0	0	0	
12. SAFETY WORK ON COMPLETED SECTIONS	0	0	0	0	0	0	0	
13. NOISE ABATEMENT MEASURES	0	0	0	0	0	0	0	
14. ROADSIDE IMPROVEMENT A. LANDSCAPE PLANTING	0	0	0	0	0	0	0	
B. REST AREAS & OVERLOOKS	0	0	0	0	0	0	0	
15. ALL OTHER ITEMS: MAINT. OF TRAF., TRAINING, MOBIL, ETC.	0	0	0	0	0	0	0	
16. SUBTOTAL, LINES 4 THRU 15	0	0	0	0	0	0	0	
17. CONSTRUCTION ENGINEERING & CONTINGENCIES, 15% of LINE 16	0	0	0	0	0	0	0	
18. TOTAL COST OF CONSTRUCTION, LINES 16 & 17	0	0	0	0	0	0	0	
19. TOTAL ESTIMATE COST, LINES 1, 2, 3, & 18	0	0	0	0	0	0	0	

** ROUNDED TO ZERO

STATE: MARYLAND CODE: 24

ROUTE: 095

TABLE B - DESIGN CLASSIFICATION AND COST ESTIMATE BY ESTIMATE SECTIONS WITH ROUTE TOTALS

ITEM	ESTIMATE SECTION MILEPOST							TOTAL FOR ROUTE
	77.55	88.99	90.03	90.98	92.70	107.53	107.78	
1. FINANCE CODE	10	10	10	10	10	10	10	
2. SECTION LENGTH	11.44	1.04	0.95	1.72	14.83	0.25	1.10	108.88
3. CLASS: RURAL (R) OR URBAN AREA I.D. (NAME AND CODE)	R	R	R	R	R	U	U	
						106	106	
						WILMINGTOM	WILMINGTOM	
4. MILEAGE INCREMENT: CODE(1,2, OR 3)	1	1	1	1	1	1	1	
5. ROUTE SIGNIFICANCE: CODE (N OR L)	N	N	N	N	N	N	N	
6. DESIGN SPEED (V)	70	70	70	70	70	70	70	
7. BASE YEAR TRAFFIC (1982 ADT)	62,700	40,700	40,700	40,700	31,900	31,900	31,900	
8. TRAFFIC A. DESIGN YEAR	1975	1975	1975	1975	1975	1975	1975	
B. ADT DESIGN YEAR	39,150	39,150	39,150	39,150	39,150	39,150	39,150	
C. DHV DESIGN YEAR	4,307	4,307	4,307	4,307	4,307	4,279	4,279	
D. DIRECTION DISTRIBUTION FACTOR	55	55	55	55	55	55	55	
E. T% TRUCKS DESIGN YEAR DHV	10	10	10	10	10	10	10	
F. T% TRUCKS DESIGN YEAR ADT	12	12	12	12	12	12	12	
9. NUMBER LANES TO BE CONSTRUCTED THIS ESTIMATE	00	00	00	00	00	00	00	
10. ULTIMATE NUMBER THROUGH TRAFFIC LANES	08	08	08	08	08	08	08	
11. TYPICAL CROSS-SECTION REFERENCE	308	308	331	308	308	306	308	
12. RIGHT-OF-WAY WIDTH: PREVAILING	300	300	300	300	300	300	300	
13. MEDIAN WIDTH: PREVAILING	52	52	6	6	52	52	52	
14. STATUS OF DEVELOPMENT DEC. 31, 1983 (PR-511)	681	681	681	681	681	681	681	
WORK CLASSIFICATION	ESTIMATED COSTS (1,000 DOLLARS)							
1. PRELIMINARY ENGINEERING	0	0	0	0	0	0	0	
2. R.O.W. A. ACQUISITION	0	0	0	0	0	0	0	
B. RELOCATION	0	0	0	0	0	0	0	
3. UTILITY ADJUSTMENTS	0	0	0	0	0	0	0	
4. EROSION CONTROL, CLEAR, GRUB, GRADE, DRAIN, & MINOR STRUCTURES	0	0	0	0	0	0	0	
5. SUBBASE,BASE, SURFACING, & SHOULDERS	0	0	0	0	0	0	0	
6. R.R. GRADE SEPARATIONS	0	0	0	0	0	0	0	
7. HIGHWAY GRADE SEPARATIONS WITHOUT RAMPS	0	0	0	0	0	0	0	
8. INTERCHANGES	0	0	0	0	0	0	0	
9. OTHER BRIDGES, TUNNELS, AND WALLS	0	0	0	0	0	0	0	
10. TRAFFIC CONTROL DEVICES	0	0	0	0	0	0	0	
11. WEIGH STATIONS, PEDESTRIAN AND BICYCLE FACILITIES	0	0	0	0	0	0	0	
12. SAFETY WORK ON COMPLETED SECTIONS	0	0	0	0	0	0	0	
13. NOISE ABATEMENT MEASURES	0	0	0	0	0	0	0	660
14. ROADSIDE IMPROVEMENT A. LANDSCAPE PLANTING	0	0	0	0	0	0	0	
B. REST AREAS & OVERLOOKS	0	0	0	0	0	0	0	
15. ALL OTHER ITEMS: MAINT. OF TRAF., TRAINING, MOBIL, ETC.	0	0	0	0	0	0	0	
16. SUBTOTAL, LINES 4 THRU 15	0	0	0	0	0	0	0	660
17. CONSTRUCTION ENGINEERING & CONTINGENCIES, 15% of LINE 16	0	0	0	0	0	0	0	99
18. TOTAL COST OF CONSTRUCTION, LINES 16 & 17	0	0	0	0	0	0	0	759
19. TOTAL ESTIMATE COST, LINES 1, 2, 3, & 18	0	0	0	0	0	0	0	759

** ROUNDED TO ZERO

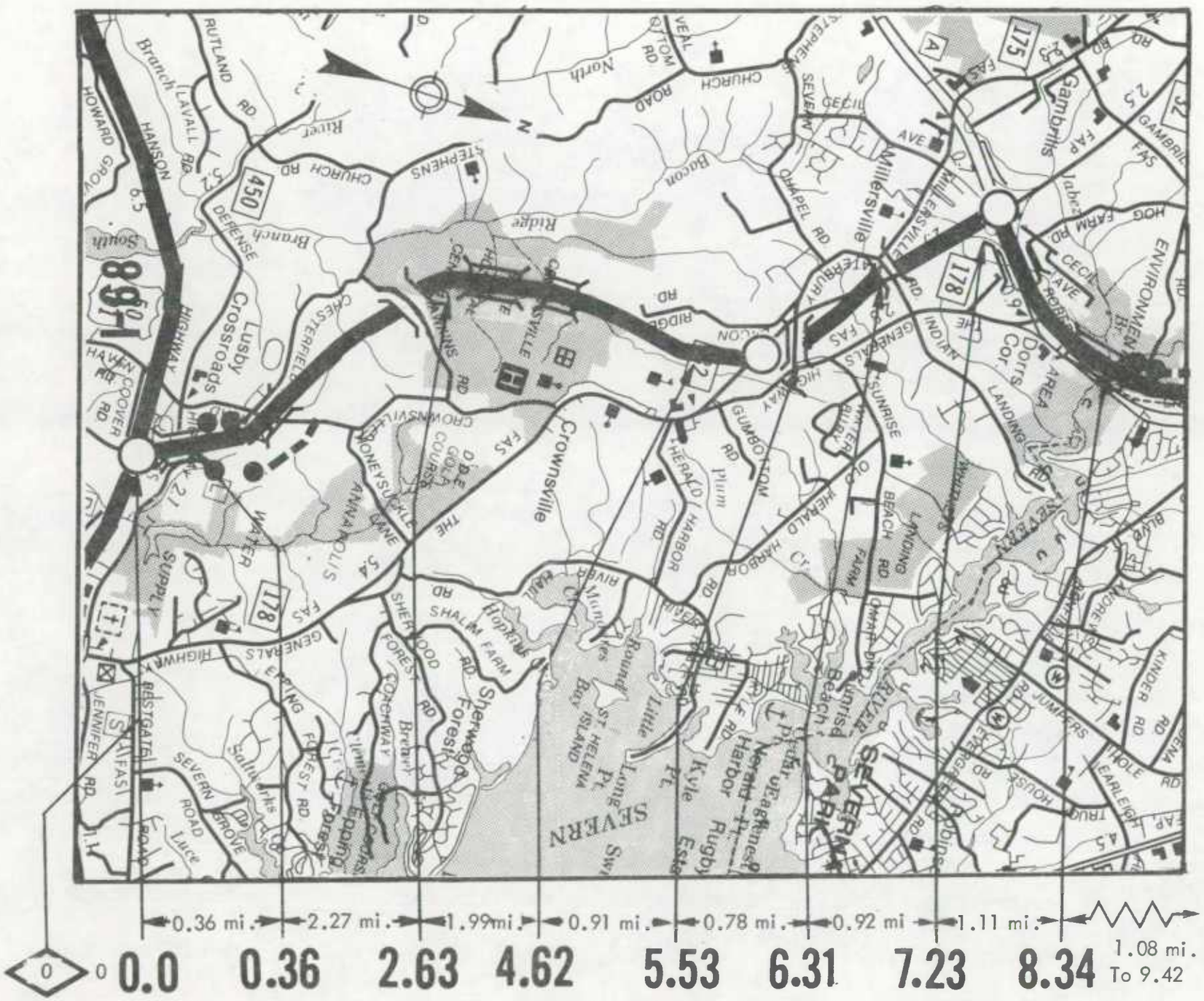

LEGEND

- Interstate Location Status 4 thru 1
- Interstate Location Status 5a(2) or 5a(3)
- Segments Approved Under Section 139 Title 23, USC, (non-chargeable).
- Interchange
- Highway Grade Separation -No Connection
- Railroad Grade Separation
- Combination Highway-Railroad Grade Separation
- Other Bridge
- Tunnel
- TOLL — Toll Bridge, Tunnel, Highway or Combination
- Frontage Road
- Terminated Cross Road
- Intersection At-Grade
- Urban Area Boundary
- Safety Rest Area
- 13 — Post Mileage
- 1 2 — Route Sections
- 2.8 — Esrimate Section Number

MARYLAND

INTERSTATE ROUTE 97

SHEET 1 OF 2

DATE: DECEMBER 31, 1985

SCALE IN MILES

0 1 2

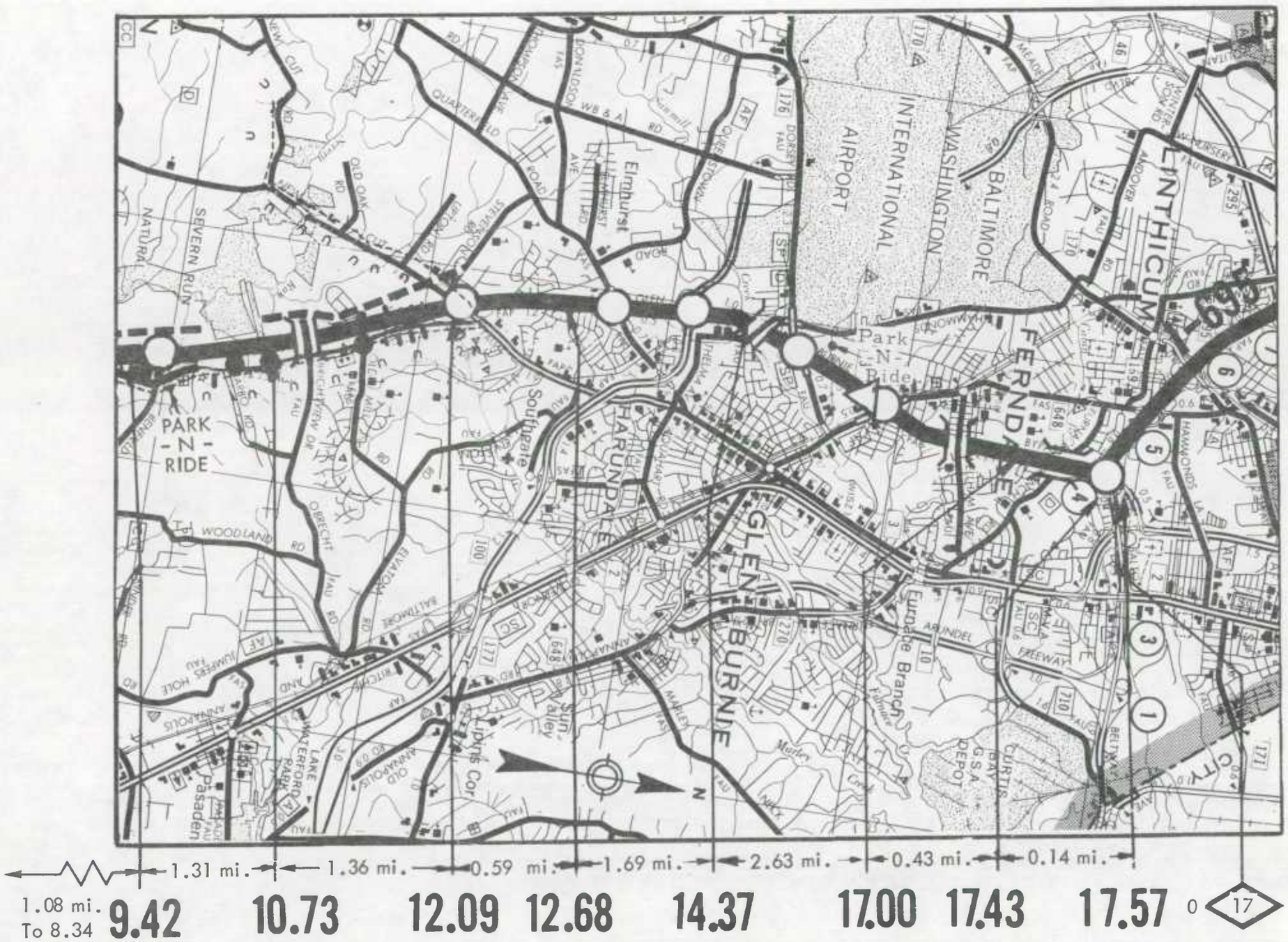

INTERSTATE ROUTE 97

SHEET 2 OF 2

2.27
1.99
4.26

STATE: MARYLAND CODE: 24

ROUTE: 097

TABLE B - DESIGN CLASSIFICATION AND COST ESTIMATE BY ESTIMATE SECTIONS WITH ROUTE TOTALS

ITEM	ESTIMATE SECTION MILEPOST							TOTAL FOR ROUTE
	0.00	0.36	2.63	4.62	5.53	6.31	7.23	
1. FINANCE CODE	23	22	22	23	23	23	23	
2. SECTION LENGTH	0.36	2.27	1.99	0.91	0.78	0.92	1.11	
3. CLASS: RURAL (R) OR URBAN AREA I.D. (NAME AND CODE)	R	R	R	R	R	R	R	
4. MILEAGE INCREMENT: CODE(1,2, OR 3)	2	2	2	2	2	2	2	
5. ROUTE SIGNIFICANCE: CODE (N OR L)	N	N	N	N	N	N	N	
6. DESIGN SPEED (V)	70	70	70	70	70	70	70	
7. BASE YEAR TRAFFIC (1982 ADT)	23,100	23,100	23,100	23,100	23,100	23,100	44,495	
8. TRAFFIC A. DESIGN YEAR	2006	2006	2006	2006	2006	2006	2006	
B. ADT DESIGN YEAR	42,000	42,000	42,000	42,000	42,000	42,000	75,000	
C. DHV DESIGN YEAR	4,200	4,200	4,200	4,200	4,200	4,200	7,500	
D. DIRECTION DISTRIBUTION FACTOR	60	60	60	60	60	60	60	
E. T% TRUCKS DESIGN YEAR DHV	08	08	08	08	08	08	10	
F. T% TRUCKS DESIGN YEAR ADT	10	10	10	10	10	10	14	
9. NUMBER LANES TO BE CONSTRUCTED THIS ESTIMATE	04	04	04	04	02	04	06	
10. ULTIMATE NUMBER THROUGH TRAFFIC LANES	04	04	04	04	04	04	06	
11. TYPICAL CROSS-SECTION REFERENCE	387	387	387	387	345	387	387	
12. RIGHT-OF-WAY WIDTH: PREVAILING	450	450	450	300	300	300	300	
13. MEDIAN WIDTH: PREVAILING	54	54	54	54	54	54	54	
14. STATUS OF DEVELOPMENT DEC. 31, 1983 (PR-511)	3A2	3A2	3A2	3A2	3A2	2A1F	2A1F	
WORK CLASSIFICATION	ESTIMATED COSTS (1,000 DOLLARS)							
1. PRELIMINARY ENGINEERING	0	0	0	0	0	0	0	
2. R.O.W. A. ACQUISITION	0	0	0	0	0	0	0	
B. RELOCATION	0	0	0	0	0	0	0	
3. UTILITY ADJUSTMENTS	0	0	0	0	0	489	590	
4. EROSION CONTROL, CLEAR, GRUB, GRADE, DRAIN, & MINOR STRUCTURES	0	0	0	0	0	6,158	7,525	
5. SUBBASE,BASE, SURFACING, & SHOULDERS	0	0	0	0	0	4,094	5,002	
6. R.R. GRADE SEPARATIONS	0	0	0	0	0	0	0	
7. HIGHWAY GRADE SEPARATIONS WITHOUT RAMPS	0	0	0	0	0	4,757	2,668	
8. INTERCHANGES	0	0	0	0	0	0	1,056	
9. OTHER BRIDGES, TUNNELS, AND WALLS	0	0	0	0	0	0	0	
10. TRAFFIC CONTROL DEVICES	0	0	0	0	0	735	937	
11. WEIGH STATIONS, PEDESTRIAN AND BICYCLE FACILITIES	0	0	0	0	0	0	0	
12. SAFETY WORK ON COMPLETED SECTIONS	0	0	0	0	0	0	0	
13. NOISE ABATEMENT MEASURES	0	0	0	0	0	0	0	
14. ROADSIDE IMPROVEMENT A. LANDSCAPE PLANTING	0	0	0	0	0	0	0	
B. REST AREAS & OVERLOOKS	0	0	0	0	0	0	0	
15. ALL OTHER ITEMS: MAINT. OF TRAF., TRAINING, MOBIL, ETC.	0	187	164	75	64	654	706	
16. SUBTOTAL, LINES 4 THRU 15	0	187	164	75	64	16,397	17,892	
17. CONSTRUCTION ENGINEERING & CONTINGENCIES, 15% of LINE 16	0	28	25	11	10	2,459	2,685	
18. TOTAL COST OF CONSTRUCTION, LINES 16 & 17	0	215	188	86	74	18,857	20,576	
19. TOTAL ESTIMATE COST, LINES 1, 2, 3, & 18	0	215	188	86	74	19,346	21,166	

** ROUNDED TO ZERO

1.31
1.36
2.67 not 103(a)(2)

STATE: MARYLAND CODE: 24
ROUTE: 097

TABLE 8 - DESIGN CLASSIFICATION AND COST ESTIMATE BY ESTIMATE SECTIONS WITH ROUTE TOTALS

ITEM	ESTIMATE SECTION MILEPOST							TOTAL FOR ROUTE
	8.34	9.42	10.73	12.09	12.68	14.37	17.00	
1. FINANCE CODE	23	23	23	23	23	23	23	
2. SECTION LENGTH	1.08	1.31	1.36	0.59	1.69	2.63	0.43	
3. CLASS: RURAL (R) OR URBAN AREA I.D. (NAME AND CODE)	R	R	R	U	U	U	U	
				256	256	256	256	
				BALTIMORE	BALTIMORE	BALTIMORE	BALTIMORE	
4. MILEAGE INCREMENT: CODE(1,2, OR 3)	2	1	1	2	2	2	2	
5. ROUTE SIGNIFICANCE: CODE (N OR L)	N	N	N	N	N	N	N	
6. DESIGN SPEED (V)	70	70	70	70	70	70	70	
7. BASE YEAR TRAFFIC (1982 ADT)	44,495	44,495	70,455	70,455	70,455	70,455	70,455	
8. TRAFFIC A. DESIGN YEAR	2006	2006	2006	2006	2006	2006	2006	
B. ADT DESIGN YEAR	80,000	80,000	80,000	83,000	83,000	83,000	121,000	
C. DHV DESIGN YEAR	8,000	8,000	8,000	8,300	8,300	8,300	12,100	
D. DIRECTION DISTRIBUTION FACTOR	60	60	60	60	60	60	60	
E. T% TRUCKS DESIGN YEAR DHV	10	10	10	10	10	10	10	
F. T% TRUCKS DESIGN YEAR ADT	14	14	14	14	14	14	14	
9. NUMBER LANES TO BE CONSTRUCTED THIS ESTIMATE	04	06	04	02	02	02	02	
10. ULTIMATE NUMBER THROUGH TRAFFIC LANES	06	06	06	06	06	08	08	
11. TYPICAL CROSS-SECTION REFERENCE	389	388	388	388	389	390	391	
12. RIGHT-OF-WAY WIDTH: PREVAILING	275	275	250	250	300	300	300	
13. MEDIAN WIDTH: PREVAILING	60	60	60	60	60	60	60	
14. STATUS OF DEVELOPMENT DEC. 31, 1983 (PR-511)	2A2P	2A2P	2A2P	2A2F	2A2F	2A2F	2A2F	
WORK CLASSIFICATION					ESTIMATED COSTS (1,000 DOLLARS)			
1. PRELIMINARY ENGINEERING	0	0	0	0	0	0	0	
2. R.O.W. A. ACQUISITION	2,615	2,615	2,000	250	2,172	236	39	
B. RELOCATION	0	0	0	0	0	0	0	
3. UTILITY ADJUSTMENTS	635	770	642	278	190	492	446	
4. EROSION CONTROL, CLEAR, GRUB, GRADE, DRAIN, & MINOR STRUCTURES	5,596	6,841	6,353	2,720	9,441	7,950	2,620	
5. SUBBASE,BASE, SURFACING, & SHOULDERS	4,203	5,138	7,344	3,150	15,605	15,608	4,185	
6. R.R. GRADE SEPARATIONS	0	0	0	0	0	0	0	
7. HIGHWAY GRADE SEPARATIONS WITHOUT RAMPS	0	0	1,970	0	0	3,088	934	
8. INTERCHANGES	0	11,074	0	3,229	17,659	4,227	0	
9. OTHER BRIDGES, TUNNELS, AND WALLS	3,055	0	700	0	0	2,225	268	
10. TRAFFIC CONTROL DEVICES	319	58	620	266	696	866	19	
11. WEIGH STATIONS, PEDESTRIAN AND BICYCLE FACILITIES	0	0	0	0	0	0	0	
12. SAFETY WORK ON COMPLETED SECTIONS	0	0	0	0	0	0	0	
13. NOISE ABATEMENT MEASURES	0	0	1,740	0	4,875	3,228	2,015	
14. ROADSIDE IMPROVEMENT A. LANDSCAPE PLANTING	0	0	0	0	0	0	0	
B. REST AREAS & OVERLOOKS	0	0	0	0	0	0	0	
15. ALL OTHER ITEMS: MAINT. OF TRAF., TRAINING, MOBIL, ETC.	1,027	1,255	1,428	612	2,065	1,200	486	
16. SUBTOTAL, LINES 4 THRU 15	14,201	24,366	20,154	9,976	50,342	38,392	10,528	
17. CONSTRUCTION ENGINEERING & CONTINGENCIES, 15% of LINE 16	2,130	3,656	3,022	1,497	7,552	5,758	1,579	
18. TOTAL COST OF CONSTRUCTION, LINES 16 & 17	16,331	28,021	23,175	11,472	57,893	44,150	12,107	
19. TOTAL ESTIMATE COST, LINES 1, 2, 3, & 18	19,581	31,406	25,817	12,000	60,255	44,878	12,592	

** ROUNDED TO ZERO

STATE: MARYLAND CODE: 24
ROUTE: 097

TABLE B - DESIGN CLASSIFICATION AND COST ESTIMATE BY ESTIMATE SECTIONS WITH ROUTE TOTALS

ITEM	ESTIMATE SECTION MILEPOST							TOTAL FOR ROUTE
	17.43							
1. FINANCE CODE	23							
2. SECTION LENGTH	0.14							17.57
3. CLASS: RURAL (R) OR URBAN AREA I.D. (NAME AND CODE)	U							
	256							
	BALTIMORE							
4. MILEAGE INCREMENT: CODE(1,2, OR 3)	2							
5. ROUTE SIGNIFICANCE: CODE (N OR L)	N							
6. DESIGN SPEED (V)	70							
7. BASE YEAR TRAFFIC (1982 ADT)	70,455							
8. TRAFFIC A. DESIGN YEAR	2006							
B. ADT DESIGN YEAR	121,000							
C. DHV DESIGN YEAR	12,100							
D. DIRECTION DISTRIBUTION FACTOR	60							
E. T% TRUCKS DESIGN YEAR DHV	10							
F. T% TRUCKS DESIGN YEAR ADT	14							
9. NUMBER LANES TO BE CONSTRUCTED THIS ESTIMATE	04							
10. ULTIMATE NUMBER THROUGH TRAFFIC LANES	08							
11. TYPICAL CROSS-SECTION REFERENCE	391							
12. RIGHT-OF-WAY WIDTH: PREVAILING	300							
13. MEDIAN WIDTH: PREVAILING	60							
14. STATUS OF DEVELOPMENT DEC. 31, 1983 (PR-511)	2A2F							
WORK CLASSIFICATION	ESTIMATED COSTS (1,000 DOLLARS)							
1. PRELIMINARY ENGINEERING	0							
2. R.O.W. A. ACQUISITION	25							9,952
B. RELOCATION	0							
3. UTILITY ADJUSTMENTS	166							4,698
4. EROSION CONTROL, CLEAR, GRUB, GRADE, DRAIN, & MINOR STRUCTURES	0							55,204
5. SUBBASE,BASE, SURFACING, & SHOULDERS	0							64,329
6. R.R. GRADE SEPARATIONS	0							
7. HIGHWAY GRADE SEPARATIONS WITHOUT RAMPS	3,107							16,524
8. INTERCHANGES	9,700							46,945
9. OTHER BRIDGES, TUNNELS, AND WALLS	562							6,810
10. TRAFFIC CONTROL DEVICES	401							4,917
11. WEIGH STATIONS, PEDESTRIAN AND BICYCLE FACILITIES	0							
12. SAFETY WORK ON COMPLETED SECTIONS	0							
13. NOISE ABATEMENT MEASURES	672							12,530
14. ROADSIDE IMPROVEMENT A. LANDSCAPE PLANTING	0							
B. REST AREAS & OVERLOOKS	0							
15. ALL OTHER ITEMS: MAINT. OF TRAF., TRAINING, MOBIL, ETC.	0							9,923
16. SUBTOTAL, LINES 4 THRU 15	14,441							217,179
17. CONSTRUCTION ENGINEERING & CONTINGENCIES, 15% of LINE 16	2,166							32,578
18. TOTAL COST OF CONSTRUCTION, LINES 16 & 17	16,607							249,752
19. TOTAL ESTIMATE COST, LINES 1, 2, 3, & 18	16,793							264,402

** ROUNDED TO ZERO

295

325

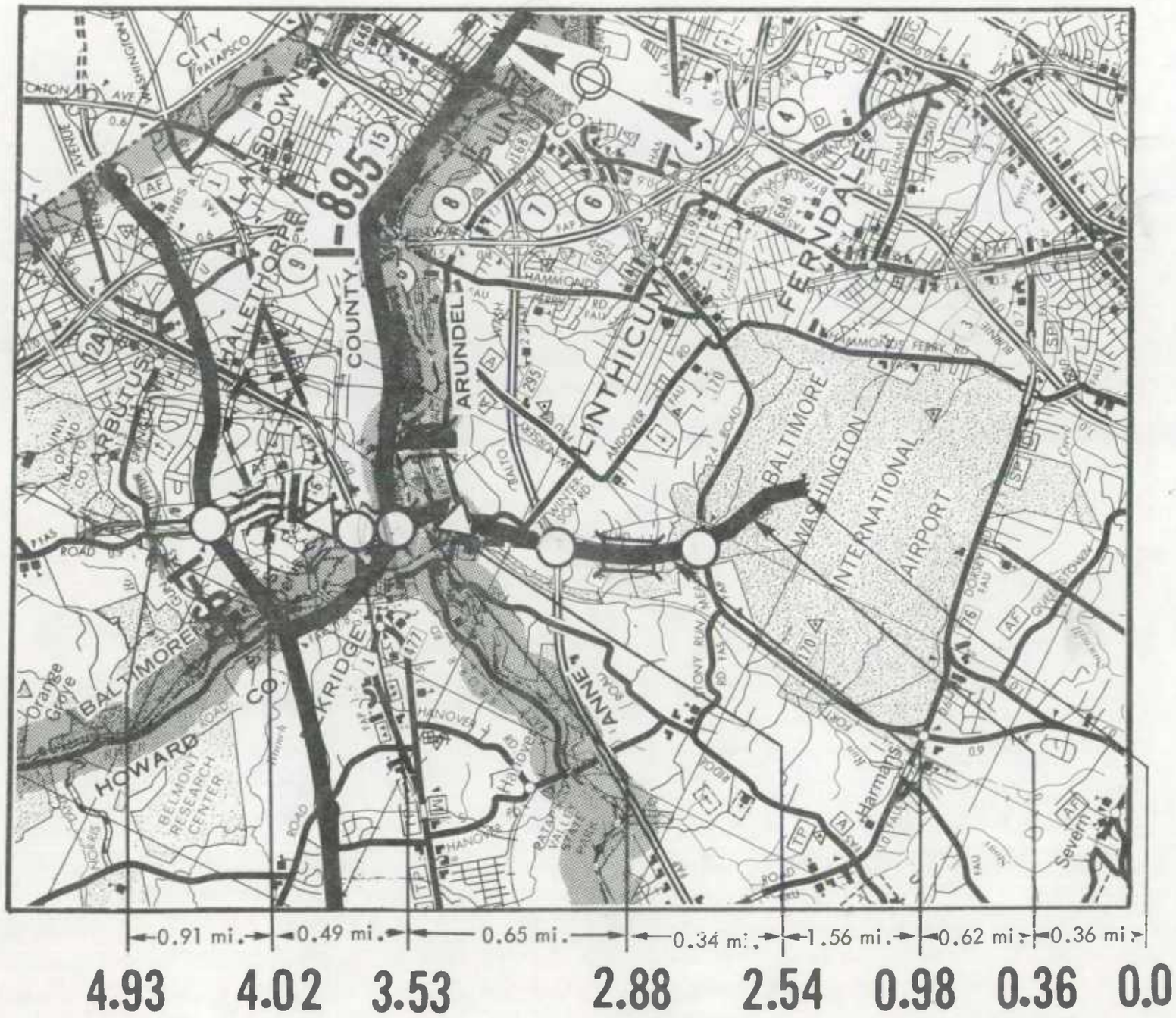

LEGEND

- Interstate Location Status 4 thru 1
- Interstate Location Status 5a(2) or 5a(3)
- Segments Approved Under Section 139 Title 23, USC, (non-chargeable).
- Interchange
- Highway Grade Separation -No Connection
- Railroad Grade Separation
- Combination Highway-Railroad Grade Separation
- Other Bridge
- Tunnel
- TOLL — Toll Bridge, Tunnel, Highway or Combination
- Frontage Road
- Terminated Cross Road
- Intersection At-Grade
- Urban Area Boundary
- Safety Rest Area
- 13 — Post Mileage
- 1 2 — Route Sections
- 2.8 — Estimate Section Number

MARYLAND

INTERSTATE ROUTE 195

SHEET 1 OF 1

DATE: DECEMBER 31, 1985

SCALE IN MILES

0 1 2

4.93
2.88
205

1.34
.68
1.02
1.56
2.58

1.56
.34
.68
2.58

STATE: MARYLAND CODE: 24

ROUTE: 195

TABLE B - DESIGN CLASSIFICATION AND COST ESTIMATE BY ESTIMATE SECTIONS WITH ROUTE TOTALS

ITEM	ESTIMATE SECTION MILEPOST							TOTAL FOR ROUTE
	0.00	0.36	0.98	2.54	2.88	3.53	4.02	
1. FINANCE CODE	20	23	22	22	22	20	20	
2. SECTION LENGTH	0.36	0.62	1.56	0.34	0.68	0.49	0.91	4.93
3. CLASS: RURAL (R) OR URBAN AREA I.D. (NAME AND CODE)	U	U	U	U	U	U	U	
	256	256	256	256	256	256	256	
	BALTIMORE	BALTIMORE	BALTIMORE	BALTIMORE	BALTIMORE	BALTIMORE	BALTIMORE	
4. MILEAGE INCREMENT: CODE(1,2, OR 3)	1	1	2	2	2	3	3	
5. ROUTE SIGNIFICANCE: CODE (N OR L)	L	L	L	L	L	L	L	
6. DESIGN SPEED (V)	60	70	70	70	70	70	70	
7. BASE YEAR TRAFFIC (1982 ADT)	17,920	30,195	30,195	30,195	30,195	7,150	7,150	
8. TRAFFIC A. DESIGN YEAR	2006	2006	2006	2006	2006	2006	2006	
B. ADT DESIGN YEAR	46,000	54,500	43,000	43,000	43,000	44,200	44,200	
C. DHV DESIGN YEAR	3,923	4,711	3,717	3,870	3,870	4,000	4,000	
D. DIRECTION DISTRIBUTION FACTOR	66	67	67	63	63	63	63	
E. T% TRUCKS DESIGN YEAR DHV	04	04	04	04	04	04	04	
F. T% TRUCKS DESIGN YEAR ADT	06	06	06	06	06	06	06	
9. NUMBER LANES TO BE CONSTRUCTED THIS ESTIMATE	00	04	04	04	00	00	00	
10. ULTIMATE NUMBER THROUGH TRAFFIC LANES	04	04	04	04	00	04	04	
11. TYPICAL CROSS-SECTION REFERENCE	402	376	387	334	407	376	376	
12. RIGHT-OF-WAY WIDTH: PREVAILING	200	200	250	300	400	400	400	
13. MEDIAN WIDTH: PREVAILING	12	54	54	40	54	70	70	
14. STATUS OF DEVELOPMENT DEC. 31, 1983 (PR-511)	131F	4A1	4A1	3A2	3A2	1B1F	1B1F	
WORK CLASSIFICATION	ESTIMATED COSTS (1,000 DOLLARS)							
1. PRELIMINARY ENGINEERING	0	0	0	0	0	0	0	
2. R.O.W. A. ACQUISITION	0	0	0	850	0	0	0	850
B. RELOCATION	0	0	0	0	0	0	0	
3. UTILITY ADJUSTMENTS	0	425	1,012	0	0	0	0	1,437
4. EROSION CONTROL, CLEAR, GRUB, GRADE, DRAIN, & MINOR STRUCTURES	0	1,057	0	0	0	0	0	1,057
5. SUBBASE,BASE, SURFACING, & SHOULDERS	0	812	0	0	0	0	0	812
6. R.R. GRADE SEPARATIONS	0	0	0	0	0	0	0	
7. HIGHWAY GRADE SEPARATIONS WITHOUT RAMPS	0	0	0	0	0	0	0	
8. INTERCHANGES	0	8,784	34,991	0	0	0	0	43,775
9. OTHER BRIDGES, TUNNELS, AND WALLS	0	0	0	0	0	0	0	
10. TRAFFIC CONTROL DEVICES	0	145	0	0	0	0	0	145
11. WEIGH STATIONS, PEDESTRIAN AND BICYCLE FACILITIES	0	0	0	0	0	0	0	
12. SAFETY WORK ON COMPLETED SECTIONS	0	0	0	0	0	0	0	
13. NOISE ABATEMENT MEASURES	0	0	0	0	0	0	0	
14. ROADSIDE IMPROVEMENT A. LANDSCAPE PLANTING	0	0	0	0	0	0	0	
B. REST AREAS & OVERLOOKS	0	0	0	0	0	0	0	
15. ALL OTHER ITEMS: MAINT. OF TRAF., TRAINING, MOBIL, ETC.	0	145	0	0	0	0	0	145
16. SUBTOTAL, LINES 4 THRU 15	0	10,943	34,991	0	0	0	0	45,934
17. CONSTRUCTION ENGINEERING & CONTINGENCIES, 15% of LINE 16	0	1,642	5,249	0	0	0	0	6,891
18. TOTAL COST OF CONSTRUCTION, LINES 16 & 17	0	12,584	40,240	0	0	0	0	52,824
19. TOTAL ESTIMATE COST, LINES 1, 2, 3, & 18	0	13,009	41,252	0	0	0	0	54,261

** ROUNDED TO ZERO

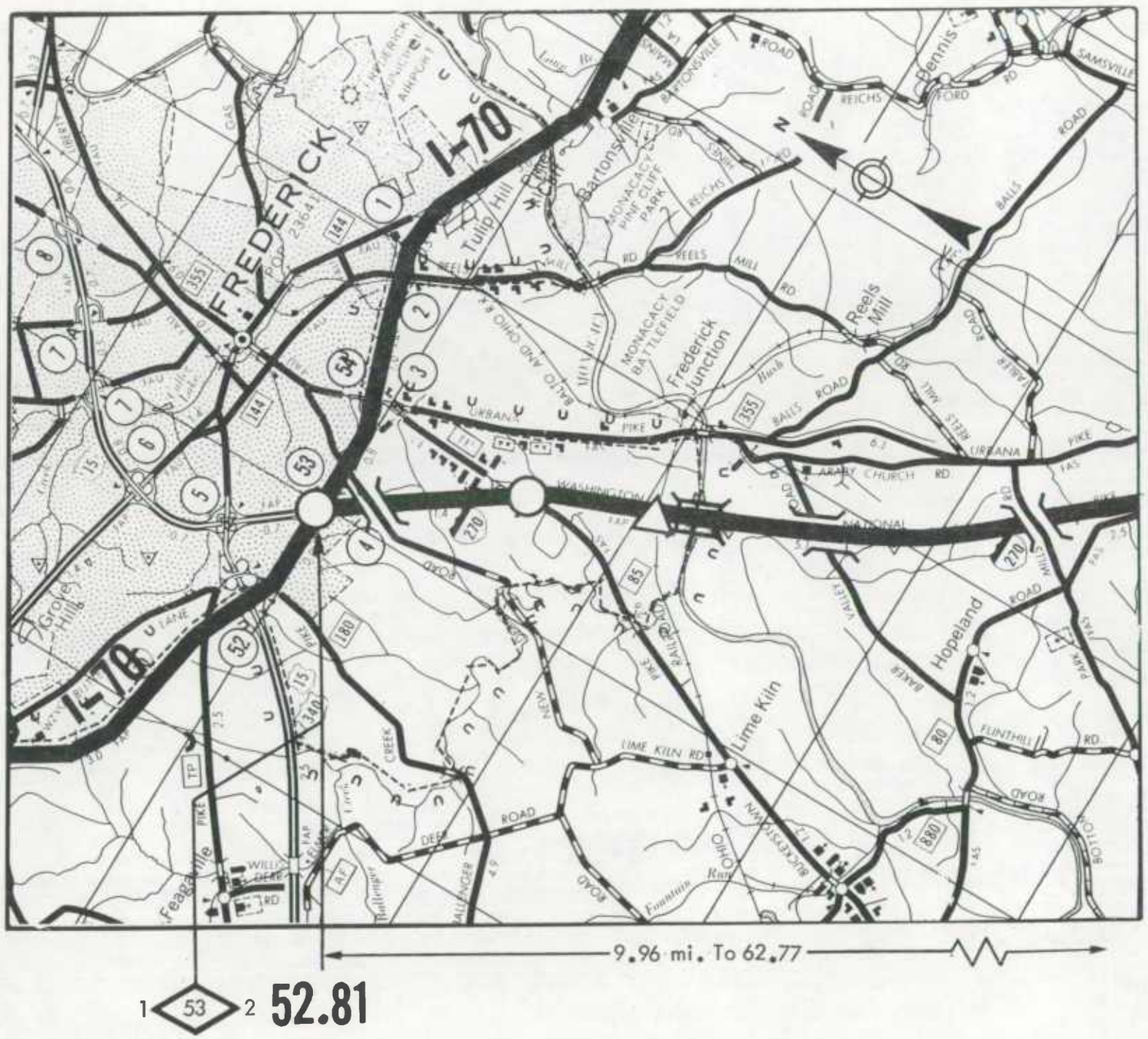

LEGEND

- Interstate Location Status 4 thru 1
- Interstate Location Status 5a(2) or 5a(3)
- Segments Approved Under Section 139 Title 23, USC, (non-chargeable).
- Interchange
- Highway Grade Separation -No Connection
- Railroad Grade Separation
- Combination Highway-Railroad Grade Separation
- Other Bridge
- Tunnel
- TOLL — Toll Bridge, Tunnel, Highway or Combination
- Frontage Road
- Terminated Cross Road
- Intersection At-Grade
- Urban Area Boundary
- Safety Rest Area
- 13 — Post Mileage
- 1 2 — Route Sections
- 2.8 — Estimate Section Number

MARYLAND

INTERSTATE ROUTE 270

SHEET 1 OF 5

DATE : DECEMBER 31, 1985

SCALE IN MILES

0 1 2

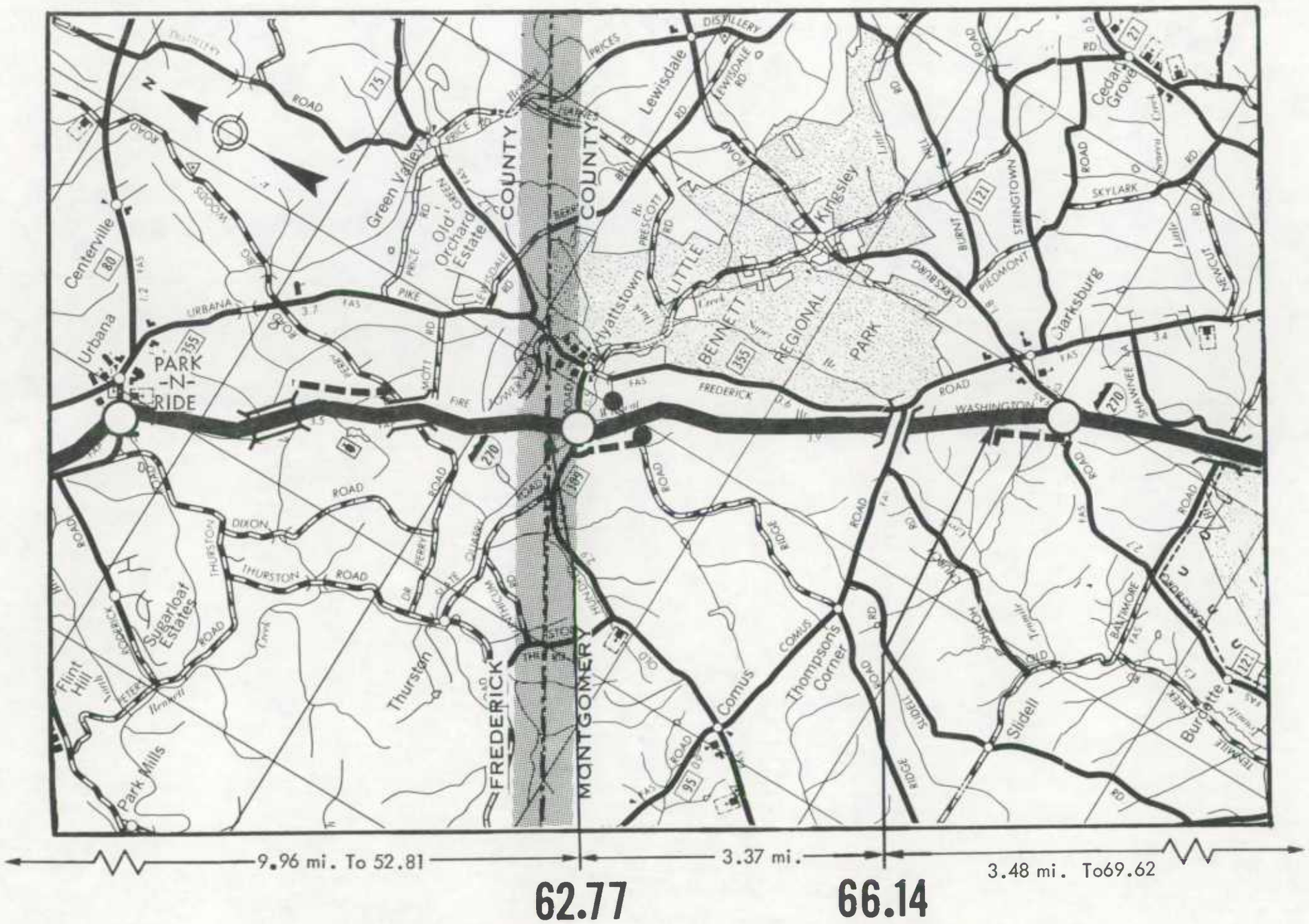

INTERSTATE ROUTE 270

SHEET 2 OF 5

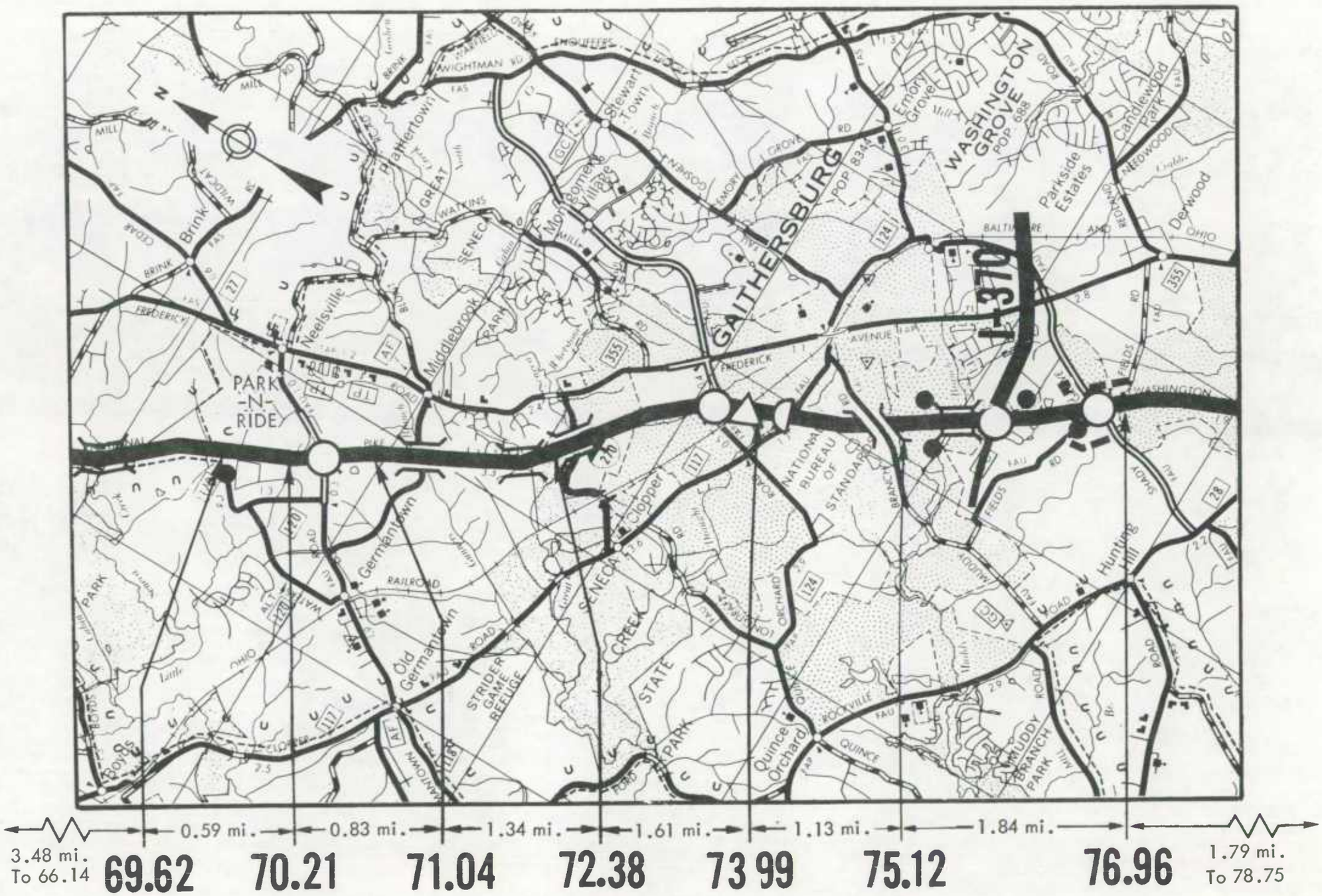

INTERSTATE ROUTE 270

SHEET 3 OF 5

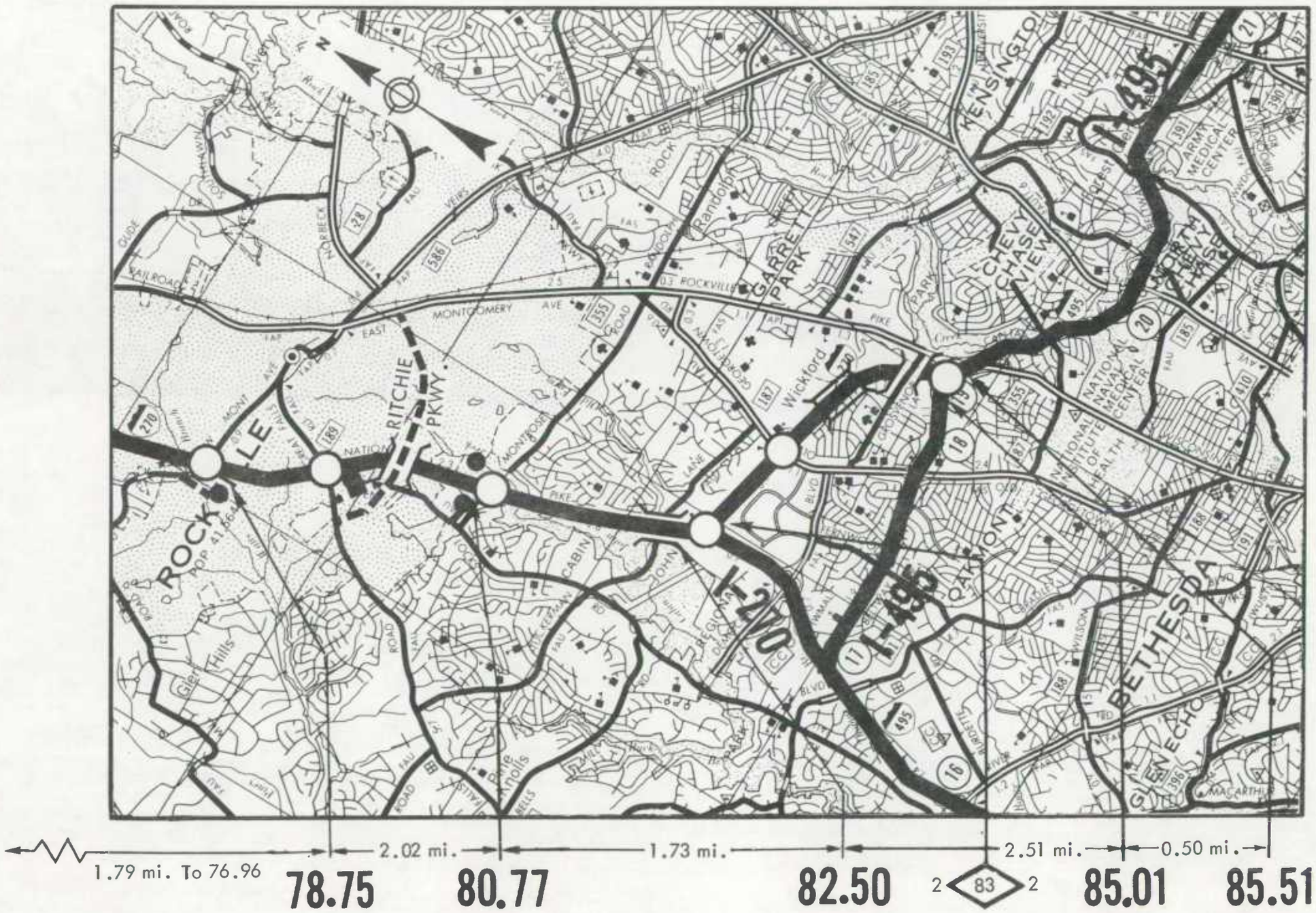

INTERSTATE ROUTE 270

SHEET 4 OF 5

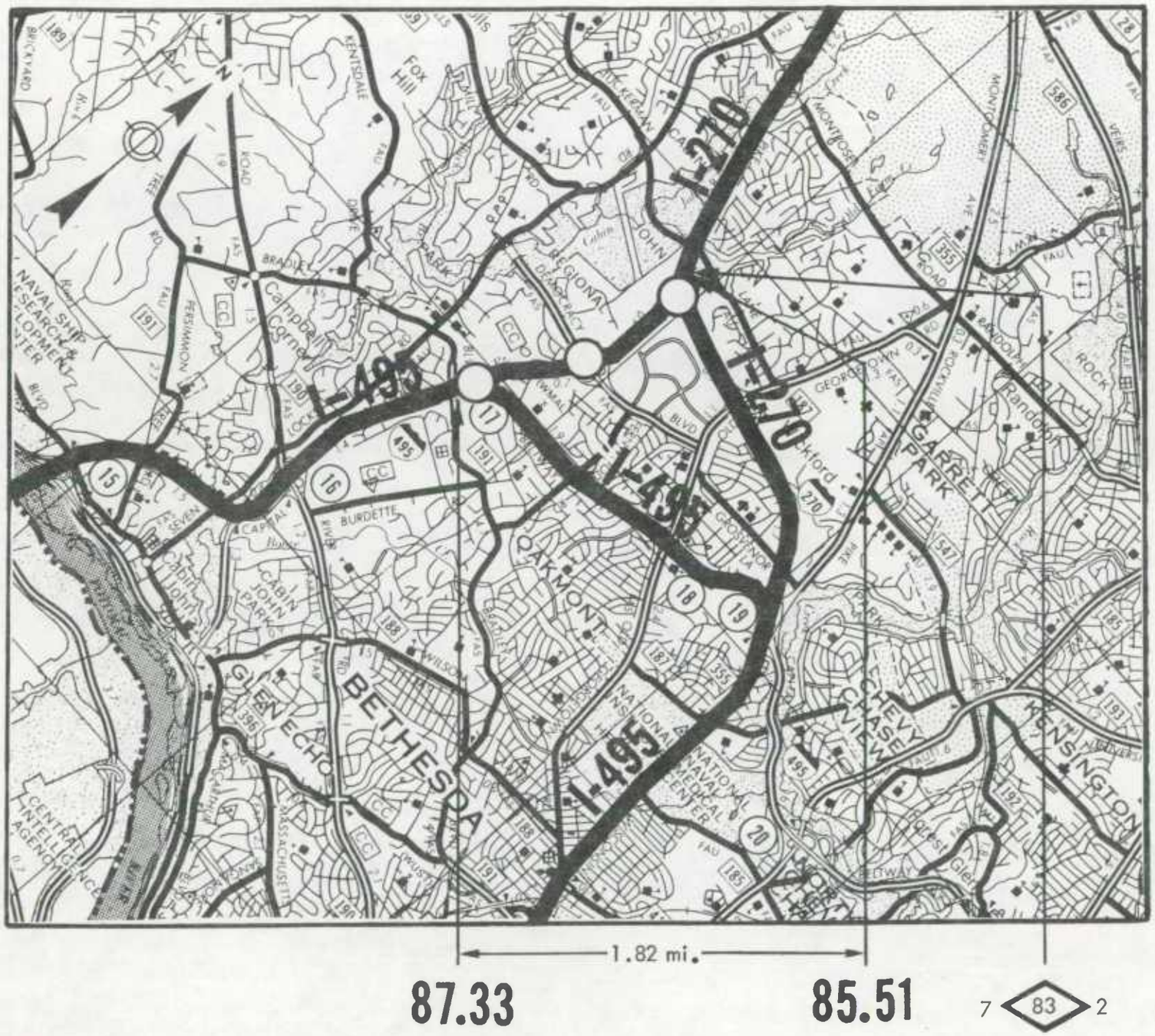

LEGEND

- Interstate Location Status 4 thru 1
- Interstate Location Status 5a(2) or 5a(3)
- Segments Approved Under Section 139 Title 23, USC, (non-chargeable).
- Interchange
- Highway Grade Separation -No Connection
- Railroad Grade Separation
- Combination Highway-Railroad Grade Separation
- Other Bridge
- Tunnel
- TOLL — Toll Bridge, Tunnel, Highway or Combination
- Frontage Road
- Terminated Cross Road
- Intersection At-Grade
- U U — Urban Area Boundary
- Safety Rest Area
- 13 — Post Mileage
- 1 2 — Route Sections
- 2.8 — Estimate Section Number

MARYLAND

INTERSTATE ROUTE 270

SHEET 5 OF 5

DATE: DECEMBER 31, 1985

SCALE IN MILES

0 1 2

STATE: MARYLAND CODE: 24
ROUTE: 270

TABLE 3 - DESIGN CLASSIFICATION AND COST ESTIMATE BY ESTIMATE SECTIONS WITH ROUTE TOTALS

ITEM	ESTIMATE SECTION MILEPOST							TOTAL FOR ROUTE
	52.81	62.77	66.14	69.62	70.21	71.04	72.38	
1. FINANCE CODE	25	25	25	25	25	25	25	
2. SECTION LENGTH	9.96	3.37	3.48	0.59	0.83	1.34	1.61	
3. CLASS: RURAL (R) OR URBAN AREA I.D. (NAME AND CODE)	U	R	R	U	U	U	U	
	257			796	796	796	796	
	FREDERICK			WASHINGTON	WASHINGTON	WASHINGTON	WASHINGTON	
4. MILEAGE INCREMENT: CODE(1,2, OR 3)	1	1	1	1	1	1	1	
5. ROUTE SIGNIFICANCE: CODE (N OR L)	N	N	N	N	N	N	N	
6. DESIGN SPEED (V)	60	60	60	60	60	60	60	
7. BASE YEAR TRAFFIC (1982 ADT)	39,325	35,970	42,350	42,350	66,000	66,000	66,000	
8. TRAFFIC A. DESIGN YEAR	1975	1975	2006	2006	1993	1993	1993	
B. ADT DESIGN YEAR	25,600	25,600	80,000	80,000	89,500	89,500	89,500	
C. DHV DESIGN YEAR	3,072	3,072	6,550	6,550	7,610	7,610	7,610	
D. DIRECTION DISTRIBUTION FACTOR	60	60	60	60	60	60	60	
E. T% TRUCKS DESIGN YEAR DHV	03	03	03	03	03	03	03	
F. T% TRUCKS DESIGN YEAR ADT	07	07	07	07	07	07	07	
9. NUMBER LANES TO BE CONSTRUCTED THIS ESTIMATE	00	00	02	02	02	02	02	
10. ULTIMATE NUMBER THROUGH TRAFFIC LANES	06	04	06	06	06	08	08	
11. TYPICAL CROSS-SECTION REFERENCE	324	301	324	324	360	360	360	
12. RIGHT-OF-WAY WIDTH: PREVAILING	200	200	300	300	300	300	300	
13. MEDIAN WIDTH: PREVAILING	50	50	50	50	26	26	26	
14. STATUS OF DEVELOPMENT DEC. 31, 1983 (PR-511)	1A1F	1A1F	2A2F	2A2F	2A2F	2A2F	2A2F	
WORK CLASSIFICATION	ESTIMATED COSTS (1,000 DOLLARS)							
1. PRELIMINARY ENGINEERING	0	0	0	0	0	0	0	
2. R.O.W. A. ACQUISITION	0	0	0	0	0	0	0	
B. RELOCATION	0	0	0	0	0	0	0	
3. UTILITY ADJUSTMENTS	0	0	0	0	0	25	360	
4. EROSION CONTROL, CLEAR, GRUB, GRADE, DRAIN, & MINOR STRUCTURES	0	0	1,216	215	155	1,243	904	
5. SUBBASE,BASE, SURFACING, & SHOULDERS	0	0	4,738	864	458	1,386	1,400	
6. R.R. GRADE SEPARATIONS	0	0	0	0	0	0	0	
7. HIGHWAY GRADE SEPARATIONS WITHOUT RAMPS	0	0	0	0	0	0	351	
8. INTERCHANGES	0	0	0	0	0	0	0	
9. OTHER BRIDGES, TUNNELS, AND WALLS	0	0	0	0	0	2,799	440	
10. TRAFFIC CONTROL DEVICES	0	0	1,012	173	157	361	517	
11. WEIGH STATIONS, PEDESTRIAN AND BICYCLE FACILITIES	0	0	0	0	0	0	0	
12. SAFETY WORK ON COMPLETED SECTIONS	0	0	0	0	0	0	0	
13. NOISE ABATEMENT MEASURES	0	0	0	0	0	658	0	
14. ROADSIDE IMPROVEMENT A. LANDSCAPE PLANTING	0	0	0	0	0	0	0	
B. REST AREAS & OVERLOOKS	0	0	0	0	0	0	0	
15. ALL OTHER ITEMS: MAINT. OF TRAF., TRAINING, MOBIL, ETC.	0	0	229	40	42	645	325	
18. SUBTOTAL, LINES 4 THRU 15	0	0	7,195	1,292	812	7,092	3,937	
17. CONSTRUCTION ENGINEERING & CONTINGENCIES, 15% of LINE 16	0	0	1,079	194	122	1,064	591	
18. TOTAL COST OF CONSTRUCTION, LINES 16 & 17	0	0	8,275	1,485	934	8,156	4,528	
19. TOTAL ESTIMATE COST, LINES 1, 2, 3, & 18	0	0	8,275	1,485	934	8,181	4,888	

** ROUNDED TO ZERO

STATE: MARYLAND CODE: 24

ROUTE: 270

TABLE B - DESIGN CLASSIFICATION AND COST ESTIMATE BY ESTIMATE SECTIONS WITH ROUTE TOTALS

ITEM	ESTIMATE SECTION MILEPOST							TOTAL FOR ROUTE
	73.99	75.12	76.96	78.75	80.77	82.50	85.01	
1. FINANCE CODE	25	25	25	25	25	25	25	
2. SECTION LENGTH	1.13	1.84	1.79	2.02	1.73	2.51	0.50	
3. CLASS: RURAL (R) OR URBAN AREA I.D. (NAME AND CODE)	U	U	U	U	U	U	U	
	796	796	796	796	796	796	796	
	WASHINGTON	WASHINGTON	WASHINGTON	WASHINGTON	WASHINGTON	WASHINGTON	WASHINGTON	
4. MILEAGE INCREMENT: CODE(1,2, OR 3)	1	1	1	1	1	1	1	
5. ROUTE SIGNIFICANCE: CODE (N OR L)	N	N	N	N	N	N	N	
6. DESIGN SPEED (V)	60	60	60	60	60	60	60	
7. BASE YEAR TRAFFIC (1982 ADT)	66,000	66,000	107,800	112,200	138,600	66,000	66,000	
8. TRAFFIC A. DESIGN YEAR	1993	1993	1993	1993	1993	1993	1993	
B. ADT DESIGN YEAR	89,500	89,500	128,000	124,000	148,300	73,500	73,500	
C. DHV DESIGN YEAR	7,610	7,610	10,880	10,570	12,610	6,260	6,260	
D. DIRECTION DISTRIBUTION FACTOR	60	60	55	55	55	55	55	
E. T% TRUCKS DESIGN YEAR DHV	03	03	03	03	03	03	03	
F. T% TRUCKS DESIGN YEAR ADT	07	07	07	07	07	07	07	
9. NUMBER LANES TO BE CONSTRUCTED THIS ESTIMATE	02	02	02	02	02	02	02	
10. ULTIMATE NUMBER THROUGH TRAFFIC LANES	08	08	08	08	08	06	04	
11. TYPICAL CROSS-SECTION REFERENCE	360	360	360	360	401	324	324	
12. RIGHT-OF-WAY WIDTH: PREVAILING	300	300	300	300	350	300	300	
13. MEDIAN WIDTH: PREVAILING	26	26	26	26	26	26	26	
14. STATUS OF DEVELOPMENT DEC. 31, 1983 (PR-511)	2A2F	2A2F	2A2F	2A2F	2A2F	2A2F	2A2F	
WORK CLASSIFICATION	ESTIMATED COSTS (1,000 DOLLARS)							
1. PRELIMINARY ENGINEERING	0	0	0	0	0	0	0	
2. R.O.W. A. ACQUISITION	0	0	2,000	300	2,100	0	0	
B. RELOCATION	0	0	0	0	0	0	0	
3. UTILITY ADJUSTMENTS	305	0	0	424	0	0	0	
4. EROSION CONTROL, CLEAR, GRUB, GRADE, DRAIN, & MINOR STRUCTURES	647	0	2,353	2,950	2,593	382	0	
5. SUBBASE,BASE, SURFACING, & SHOULDERS	1,187	0	4,048	3,588	4,058	1,440	0	
6. R.R. GRADE SEPARATIONS	0	0	0	0	0	0	0	
7. HIGHWAY GRADE SEPARATIONS WITHOUT RAMPS	1,420	0	0	1,672	1,035	0	0	
8. INTERCHANGES	0	0	0	9,046	4,214	0	0	
9. OTHER BRIDGES, TUNNELS, AND WALLS	519	0	2,938	1,742	1,353	203	0	
10. TRAFFIC CONTROL DEVICES	377	0	1,359	1,035	401	439	0	
11. WEIGH STATIONS, PEDESTRIAN AND BICYCLE FACILITIES	0	0	0	0	0	0	0	
12. SAFETY WORK ON COMPLETED SECTIONS	0	0	0	0	0	0	0	
13. NOISE ABATEMENT MEASURES	167	0	0	745	1,042	7,202	0	
14. ROADSIDE IMPROVEMENT A. LANDSCAPE PLANTING	0	0	0	0	0	0	0	
B. REST AREAS & OVERLOOKS	0	0	0	0	0	0	0	
15. ALL OTHER ITEMS: MAINT. OF TRAF., TRAINING, MOBIL, ETC.	301	0	620	712	544	85	0	
16. SUBTOTAL, LINES 4 THRU 15	4,618	0	11,317	21,490	15,240	9,752	0	
17. CONSTRUCTION ENGINEERING & CONTINGENCIES, 15% of LINE 16	693	0	1,698	3,224	2,286	1,463	0	
18. TOTAL COST OF CONSTRUCTION, LINES 16 & 17	5,310	0	13,015	24,713	17,525	11,215	0	
19. TOTAL ESTIMATE COST, LINES 1, 2, 3, & 18	5,615	0	15,015	25,437	19,625	11,215	0	

** ROUNDED TO ZERO

STATE: MARYLAND CODE: 24

ROUTE: 270

TABLE B - DESIGN CLASSIFICATION AND COST ESTIMATE BY ESTIMATE SECTIONS WITH ROUTE TOTALS

ITEM	ESTIMATE SECTION MILEPOST							TOTAL FOR ROUTE
	35.51							
1. FINANCE CODE	25							
2. SECTION LENGTH	1.82							34.52
3. CLASS: RURAL (R) OR URBAN AREA I.D. (NAME AND CODE)	U							
	796							
	WASHINGTON							
4. MILEAGE INCREMENT: CODE(1,2, OR 3)	1							
5. ROUTE SIGNIFICANCE: CODE (N OR L)	N							
6. DESIGN SPEED (V)	60							
7. BASE YEAR TRAFFIC (1982 ADT)	85,800							
8. TRAFFIC A. DESIGN YEAR	1993							
B. ADT DESIGN YEAR	34,800							
C. DHV DESIGN YEAR	7,200							
D. DIRECTION DISTRIBUTION FACTOR	55							
E. T% TRUCKS DESIGN YEAR DHV	03							
F. T% TRUCKS DESIGN YEAR ADT	07							
9. NUMBER LANES TO BE CONSTRUCTED THIS ESTIMATE	00							
10. ULTIMATE NUMBER THROUGH TRAFFIC LANES	04							
11. TYPICAL CROSS-SECTION REFERENCE	307							
12. RIGHT-OF-WAY WIDTH: PREVAILING	300							
13. MEDIAN WIDTH: PREVAILING	60							
14. STATUS OF DEVELOPMENT DEC. 31, 1983 (PR-511)	1A3F							
WORK CLASSIFICATION	ESTIMATED COSTS (1,000 DOLLARS)							
1. PRELIMINARY ENGINEERING	0							
2. R.O.W. A. ACQUISITION	0							4,400
B. RELOCATION	0							
3. UTILITY ADJUSTMENTS	0							1,114
4. EROSION CONTROL, CLEAR, GRUB, GRADE, DRAIN, & MINOR STRUCTURES	0							12,658
5. SUBBASE,BASE, SURFACING, & SHOULDERS	0							23,167
6. R.R. GRADE SEPARATIONS	0							
7. HIGHWAY GRADE SEPARATIONS WITHOUT RAMPS	0							4,478
8. INTERCHANGES	0							13,260
9. OTHER BRIDGES, TUNNELS, AND WALLS	0							9,994
10. TRAFFIC CONTROL DEVICES	0							5,831
11. WEIGH STATIONS, PEDESTRIAN AND BICYCLE FACILITIES	0							
12. SAFETY WORK ON COMPLETED SECTIONS	0							
13. NOISE ABATEMENT MEASURES	0							9,814
14. ROADSIDE IMPROVEMENT A. LANDSCAPE PLANTING	0							
B. REST AREAS & OVERLOOKS	0							
15. ALL OTHER ITEMS: MAINT. OF TRAF., TRAINING, MOBIL, ETC.	0							3,543
16. SUBTOTAL, LINES 4 THRU 15	0							82,745
17. CONSTRUCTION ENGINEERING & CONTINGENCIES, 15% of LINE 16	0							12,414
18. TOTAL COST OF CONSTRUCTION, LINES 16 & 17	0							95,156
19. TOTAL ESTIMATE COST, LINES 1, 2, 3, & 18	0							100,670

** ROUNDED TO ZERO

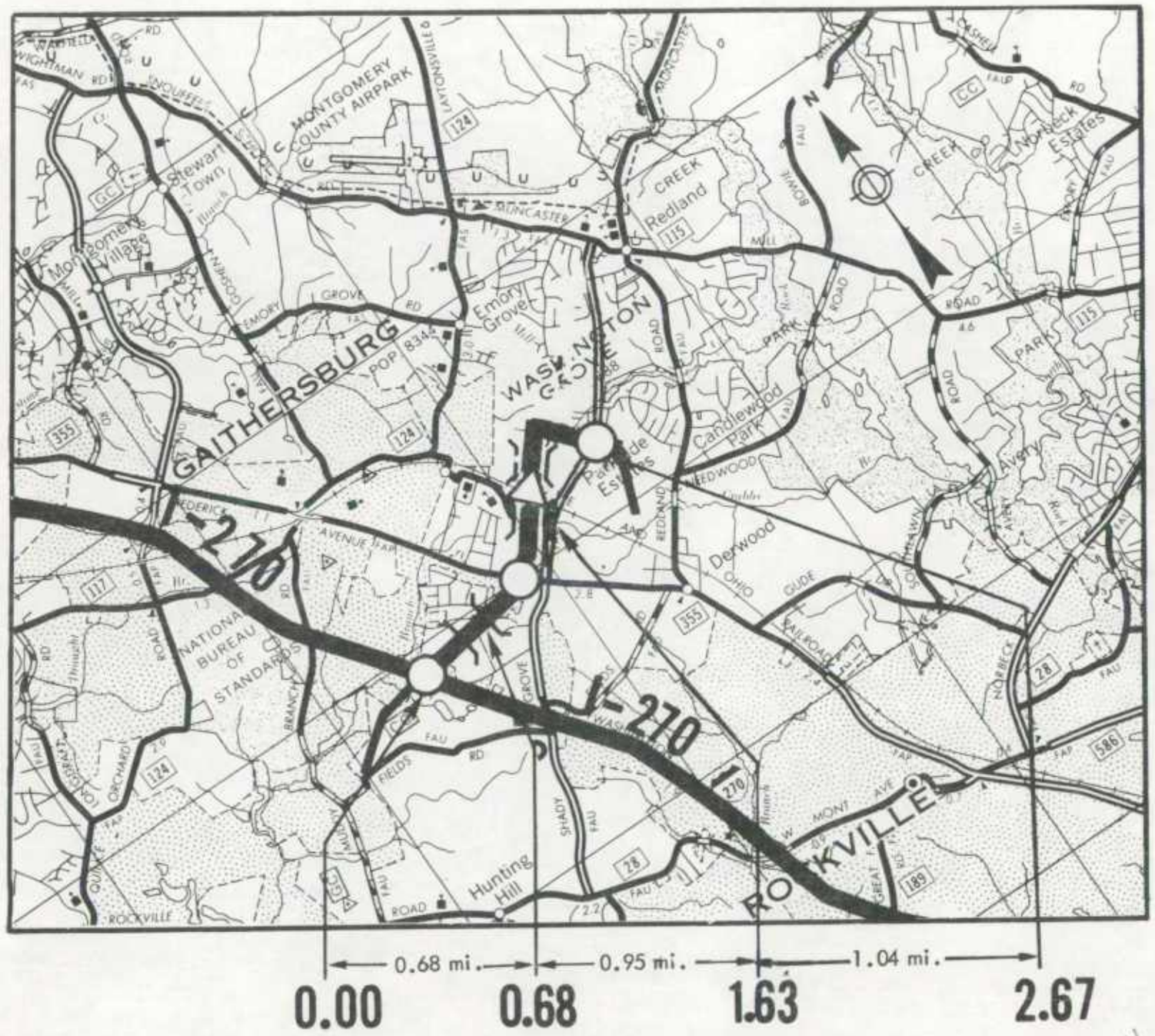

1.63

1.44
1.18
2.62

LEGEND

- Interstate Location Status 4 thru 1
- Interstate Location Status 5a(2) or 5a(3)
- Segments Approved Under Section 139 Title 23, USC, (non-chargeable).
- Interchange
- Highway Grade Separation -No Connection
- Railroad Grade Separation
- Combination Highway-Railroad Grade Separation
- Other Bridge
- Tunnel
- TOLL — Toll Bridge, Tunnel, Highway or Combination
- Frontage Road
- Terminated Cross Road
- Intersection At-Grade
- Urban Area Boundary
- Safety Rest Area
- 13 — Post Mileage
- 1 2 — Route Sections
- 2.8 — Estimate Section Number

MARYLAND

INTERSTATE ROUTE 370

SHEET 1 OF 1

DATE: DECEMBER 31, 1985

SCALE IN MILES

0 1 2

STATE: MARYLAND CODE: 24

ROUTE: 370

TABLE B - DESIGN CLASSIFICATION AND COST ESTIMATE BY ESTIMATE SECTIONS WITH ROUTE TOTALS

ITEM	ESTIMATE SECTION MILEPOST							TOTAL FOR ROUTE
	0.00	0.68	1.63					
1. FINANCE CODE	22	22	22					
2. SECTION LENGTH	0.68	0.95	1.04					2.67
3. CLASS: RURAL (R) OR URBAN AREA I.D. (NAME AND CODE)	U	U	U					
	796	796	796					
	WASHINGTON	WASHINGTON	WASHINGTON					
4. MILEAGE INCREMENT: CODE(1,2, OR 3)	2	2	2					
5. ROUTE SIGNIFICANCE: CODE (N OR L)	L	L	L					
6. DESIGN SPEED (V)	70	70	50					
7. BASE YEAR TRAFFIC (1982 ADT)	28,875	28,875	11,550					
8. TRAFFIC A. DESIGN YEAR	1980	1980	1980					
B. ADT DESIGN YEAR	69,500	69,500	33,900					
C. DHV DESIGN YEAR	6,340	6,340	3,300					
D. DIRECTION DISTRIBUTION FACTOR	55	55	55					
E. T% TRUCKS DESIGN YEAR DHV	05	05	05					
F. T% TRUCKS DESIGN YEAR ADT	11	11	11					
9. NUMBER LANES TO BE CONSTRUCTED THIS ESTIMATE	04	04	04					
10. ULTIMATE NUMBER THROUGH TRAFFIC LANES	04	04	04					
11. TYPICAL CROSS-SECTION REFERENCE	379	379	379					
12. RIGHT-OF-WAY WIDTH: PREVAILING	300	300	200					
13. MEDIAN WIDTH: PREVAILING	54	54	54					
14. STATUS OF DEVELOPMENT DEC. 31, 1983 (PR-511)	3A3	3A3	3A3					
WORK CLASSIFICATION					ESTIMATED COSTS (1,000 DOLLARS)			
1. PRELIMINARY ENGINEERING	0	0	0					
2. R.O.W. A. ACQUISITION	0	0	0					
B. RELOCATION	0	0	0					
3. UTILITY ADJUSTMENTS	0	0	0					
4. EROSION CONTROL, CLEAR, GRUB, GRADE, DRAIN, & MINOR STRUCTURES	0	0	0					
5. SUBBASE,BASE, SURFACING, & SHOULDERS	0	0	0					
6. R.R. GRADE SEPARATIONS	0	0	0					
7. HIGHWAY GRADE SEPARATIONS WITHOUT RAMPS	1,660	0	0					1,660
8. INTERCHANGES	0	0	0					
9. OTHER BRIDGES, TUNNELS, AND WALLS	0	0	0					
10. TRAFFIC CONTROL DEVICES	0	0	0					
11. WEIGH STATIONS, PEDESTRIAN AND BICYCLE FACILITIES	0	0	0					
12. SAFETY WORK ON COMPLETED SECTIONS	0	0	0					
13. NOISE ABATEMENT MEASURES	0	0	0					
14. ROADSIDE IMPROVEMENT A. LANDSCAPE PLANTING	0	0	0					
B. REST AREAS & OVERLOOKS	0	0	0					
15. ALL OTHER ITEMS: MAINT. OF TRAF., TRAINING, MOBIL, ETC.	0	0	0					
16. SUBTOTAL, LINES 4 THRU 15	1,660	0	0					1,660
17. CONSTRUCTION ENGINEERING & CONTINGENCIES, 15% of LINE 16	249	0	0					249
18. TOTAL COST OF CONSTRUCTION, LINES 16 & 17	1,909	0	0					1,909
19. TOTAL ESTIMATE COST, LINES 1, 2, 3, & 18	1,909	0	0					1,909

** ROUNDED TO ZERO

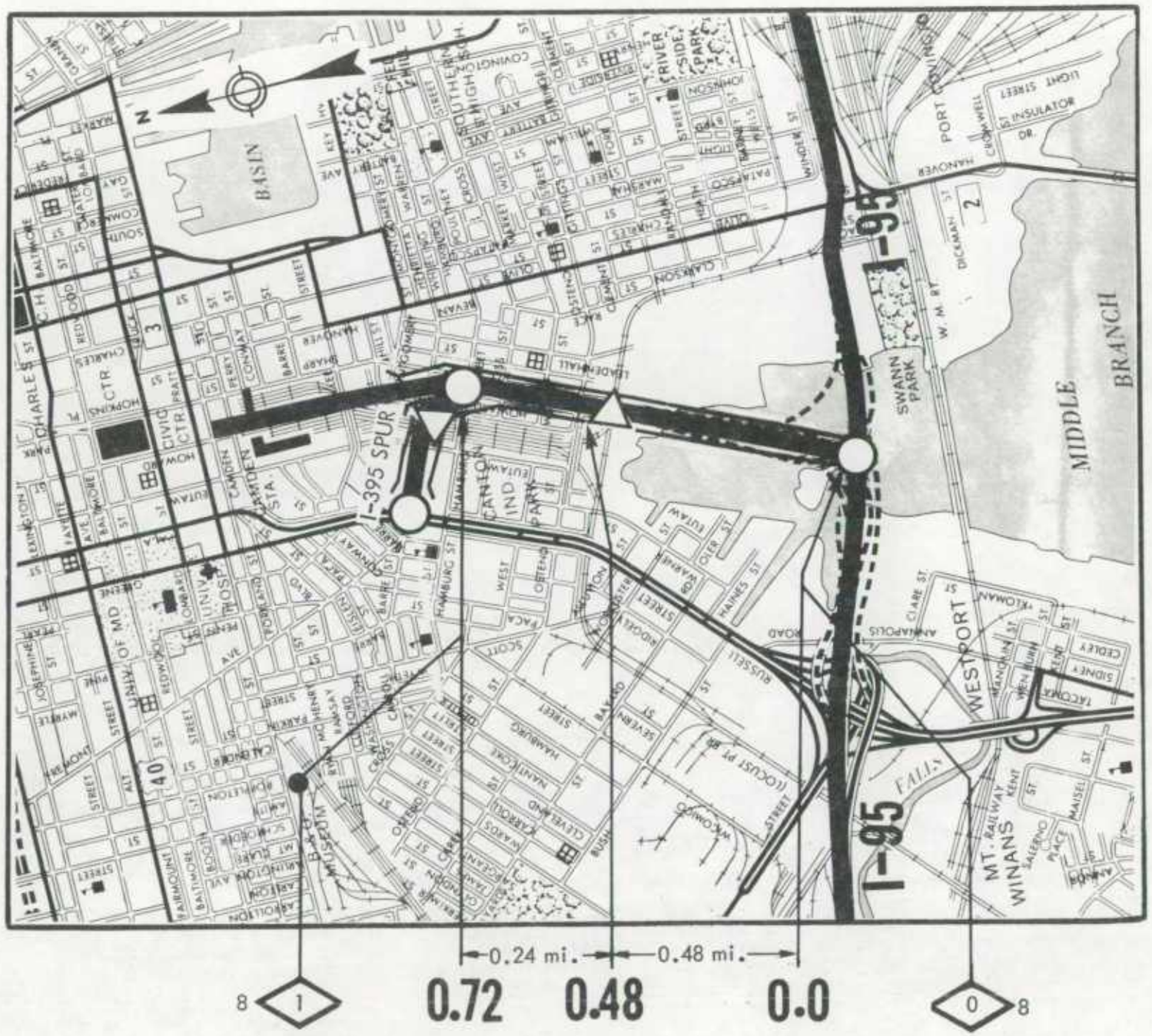

LEGEND

- Interstate Location Status 4 thru 1
- Interstate Location Status 5a(2) or 5a(3)
- Segments Approved Under Section 139 Title 23, USC, (non-chargeable).
- Interchange
- Highway Grade Separation -No Connection
- Railroad Grade Separation
- Combination Highway-Railroad Grade Separation
- Other Bridge
- Tunnel
- TOLL — Toll Bridge, Tunnel, Highway or Combination
- Frontage Road
- Terminated Cross Road
- Intersection At-Grade
- U U — Urban Area Boundary
- Safety Rest Area
- 13 — Post Mileage
- 1 2 — Route Sections
- 2.8 — Estimate Section Number

BALTIMORE CITY

INTERSTATE ROUTE 395

SHEET 1 OF 1

DATE: DECEMBER 31, 1985

SCALE: 1 INCH = 1500 FT.

STATE: MARYLAND CODE: 24

ROUTE: 395

TABLE 2 - DESIGN CLASSIFICATION AND COST ESTIMATE BY ESTIMATE SECTIONS WITH ROUTE TOTALS

ITEM	ESTIMATE SECTION MILEPOST							TOTAL FOR ROUTE
	0.00	0.48						
1. FINANCE CODE	21	20						
2. SECTION LENGTH	0.48	0.24						.72
3. CLASS: RURAL (R) OR URBAN AREA I.D. (NAME AND CODE)	U	U						
	256	256						
	BALTIMORE	BALTIMORE						
4. MILEAGE INCREMENT: CODE(1,2, OR 3)	1	1						
5. ROUTE SIGNIFICANCE: CODE (N OR L)	L	L						
6. DESIGN SPEED (V)	60	60						
7. BASE YEAR TRAFFIC (1982 ADT)	52,179	52,179						
8. TRAFFIC A. DESIGN YEAR	1998	1998						
B. ADT DESIGN YEAR	57,847	57,847						
C. DHV DESIGN YEAR	6,942	6,942						
D. DIRECTION DISTRIBUTION FACTOR	60	60						
E. T% TRUCKS DESIGN YEAR DHV	03	03						
F. T% TRUCKS DESIGN YEAR ADT	07	07						
9. NUMBER LANES TO BE CONSTRUCTED THIS ESTIMATE	00	00						
10. ULTIMATE NUMBER THROUGH TRAFFIC LANES	06	06						
11. TYPICAL CROSS-SECTION REFERENCE	350	350						
12. RIGHT-OF-WAY WIDTH: PREVAILING	300	300						
13. MEDIAN WIDTH: PREVAILING	34	34						
14. STATUS OF DEVELOPMENT DEC. 31, 1983 (PR-511)	1A1F	1A3F						
WORK CLASSIFICATION					ESTIMATED COSTS (1,000 DOLLARS)			
1. PRELIMINARY ENGINEERING	0	0						
2. R.O.W. A. ACQUISITION	0	0						
B. RELOCATION	0	0						
3. UTILITY ADJUSTMENTS	0	0						
4. EROSION CONTROL, CLEAR, GRUB, GRADE, DRAIN, & MINOR STRUCTURES	0	0						
5. SUBBASE,BASE, SURFACING, & SHOULDERS	0	0						
6. R.R. GRADE SEPARATIONS	0	0						
7. HIGHWAY GRADE SEPARATIONS WITHOUT RAMPS	0	0						
8. INTERCHANGES	0	0						
9. OTHER BRIDGES, TUNNELS, AND WALLS	0	0						
10. TRAFFIC CONTROL DEVICES	0	0						
11. WEIGH STATIONS, PEDESTRIAN AND BICYCLE FACILITIES	0	0						
12. SAFETY WORK ON COMPLETED SECTIONS	0	0						
13. NOISE ABATEMENT MEASURES	455	0						455
14. ROADSIDE IMPROVEMENT A. LANDSCAPE PLANTING	0	0						
B. REST AREAS & OVERLOOKS	0	0						
15. ALL OTHER ITEMS: MAINT. OF TRAF., TRAINING, MOBIL, ETC.	0	0						
16. SUBTOTAL, LINES 4 THRU 15	455	0						455
17. CONSTRUCTION ENGINEERING & CONTINGENCIES, 15% of LINE 16	68	0						68
18. TOTAL COST OF CONSTRUCTION, LINES 16 & 17	523	0						523
19. TOTAL ESTIMATE COST, LINES 1, 2, 3, & 18	523	0						523

** ROUNDED TO ZERO

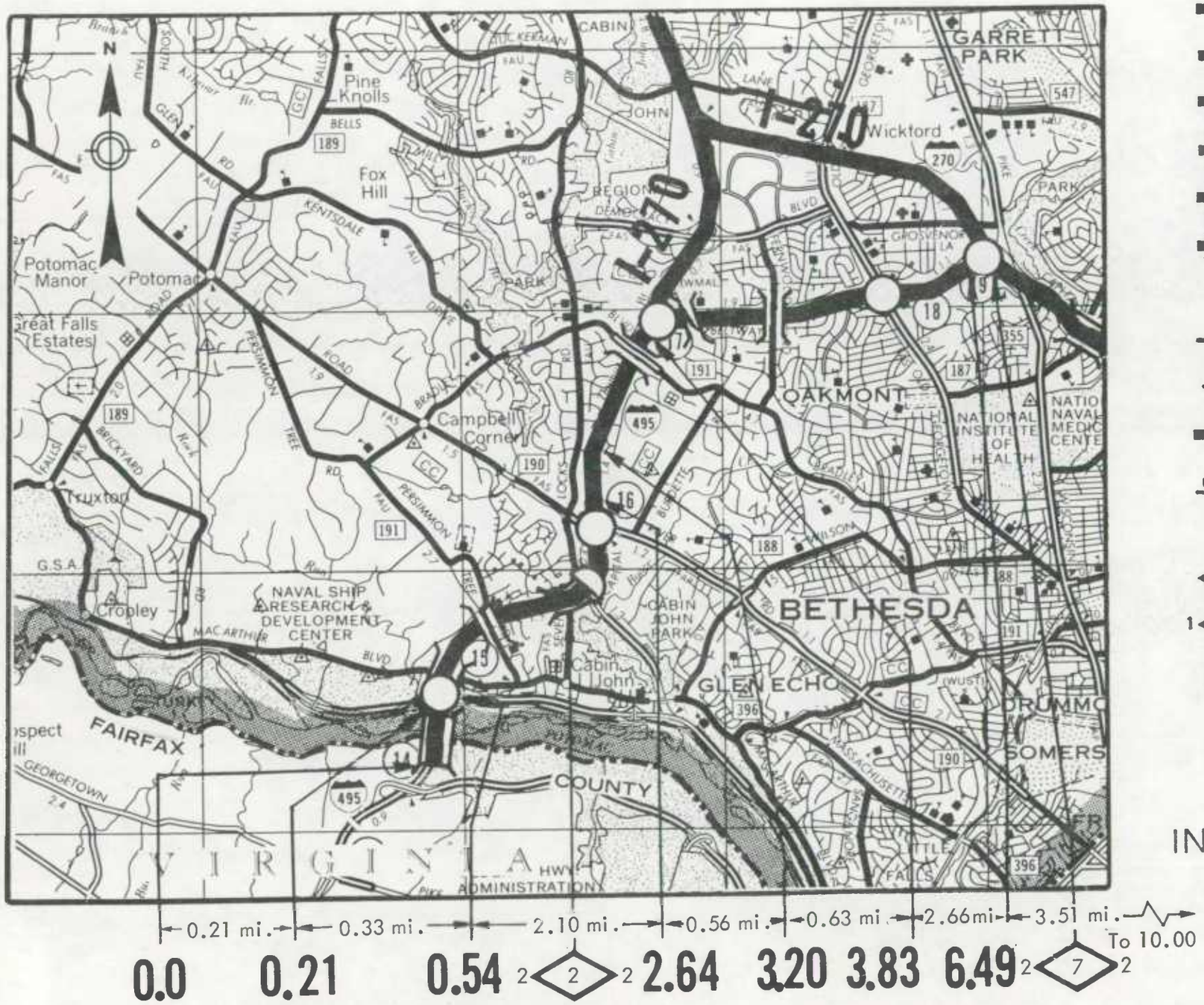

0.21 mi. | 0.33 mi. | 2.10 mi. | 0.56 mi. | 0.63 mi. | 2.66 mi. | 3.51 mi. To 10.00

0.0 0.21 0.54 2 (2) 2 2.64 3.20 3.83 6.49 2 (7) 2

LEGEND

- Interstate Location Status 4 thru 1
- Interstate Location Status 5a(2) or 5a(3)
- Segments Approved Under Section 139 Title 23, USC, (non-chargeable).
- Interchange
- Highway Grade Separation -No Connection
- Railroad Grade Separation
- Combination Highway-Railroad Grade Separation
- Other Bridge
- Tunnel
- TOLL — Toll Bridge, Tunnel, Highway or Combination
- Frontage Road
- Terminated Cross Road
- Intersection At-Grade
- U U — Urban Area Boundary
- Safety Rest Area
- 13 — Post Mileage
- 1 2 — Route Sections
- 2.8 — Estimate Section Number

MARYLAND

INTERSTATE ROUTE 495

SHEET 1 OF 2

DATE: DECEMBER 31, 1985

SCALE IN MILES

0 1 2

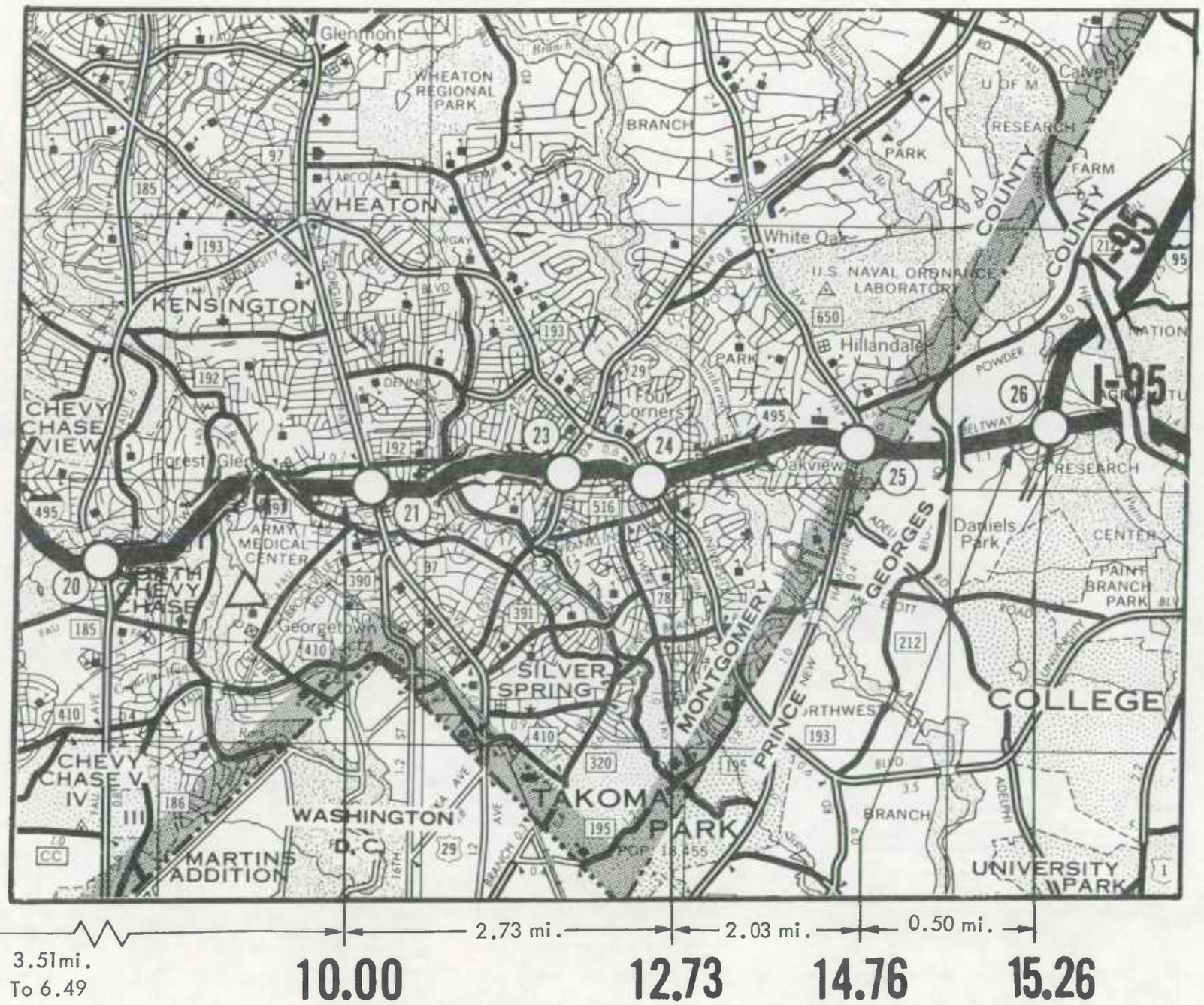

INTERSTATE ROUTE 495

SHEET 2 OF 2

STATE: MARYLAND CODE: 24

ROUTE: 495

TABLE B - DESIGN CLASSIFICATION AND COST ESTIMATE BY ESTIMATE SECTIONS WITH ROUTE TOTALS

ITEM	ESTIMATE SECTION MILEPOST							TOTAL FOR ROUTE
	0.00	0.21	0.54	2.64	3.20	3.83	6.49	
1. FINANCE CODE	20	20	20	20	20	20	21	
2. SECTION LENGTH	0.21	0.33	2.10	0.56	0.63	2.66	3.51	
3. CLASS: RURAL (R) OR URBAN AREA I.D. (NAME AND CODE)	U	U	U	U	U	U	U	
	796	796	796	796	796	796	796	
	WASHINGTON	WASHINGTON	WASHINGTON	WASHINGTON	WASHINGTON	WASHINGTON	WASHINGTON	
4. MILEAGE INCREMENT: CODE(1,2, OR 3)	1	1	1	1	1	1	1	
5. ROUTE SIGNIFICANCE: CODE (N OR L)	N	N	N	N	N	N	N	
6. DESIGN SPEED (V)	60	60	60	60	60	60	60	
7. BASE YEAR TRAFFIC (1982 ADT)	132,000	127,793	127,793	161,150	161,150	74,800	151,800	
8. TRAFFIC A. DESIGN YEAR	1990	1990	1990	1990	1990	1990	1984	
B. ADT DESIGN YEAR	145,000	156,000	156,000	160,000	160,000	90,000	140,400	
C. DHV DESIGN YEAR	14,500	15,600	15,600	16,000	16,000	9,000	11,900	
D. DIRECTION DISTRIBUTION FACTOR	55	55	55	55	55	55	55	
E. T% TRUCKS DESIGN YEAR DHV	09	09	09	09	09	09	09	
F. T% TRUCKS DESIGN YEAR ADT	11	11	11	11	11	11	11	
9. NUMBER LANES TO BE CONSTRUCTED THIS ESTIMATE	00	00	00	00	00	00	02	
10. ULTIMATE NUMBER THROUGH TRAFFIC LANES	06	06	06	06	06	06	08	
11. TYPICAL CROSS-SECTION REFERENCE	330	307	307	307	307	309	309	
12. RIGHT-OF-WAY WIDTH: PREVAILING	300	300	300	300	300	300	300	
13. MEDIAN WIDTH: PREVAILING	54	54	36	36	36	36	36	
14. STATUS OF DEVELOPMENT DEC. 31, 1983 (PR-511)	1A1F	1A1F	1A1F	1A1F	1A1F	1A1F	1A2F	
WORK CLASSIFICATION	ESTIMATED COSTS (1,000 DOLLARS)							
1. PRELIMINARY ENGINEERING	0	0	0	0	0	0	0	
2. R.O.W. A. ACQUISITION	0	0	0	0	0	0	0	
B. RELOCATION	0	0	0	0	0	0	0	
3. UTILITY ADJUSTMENTS	0	0	0	0	0	0	250	
4. EROSION CONTROL, CLEAR, GRUB, GRADE, DRAIN, & MINOR STRUCTURES	0	0	0	0	0	0	1,292	
5. SUBBASE,BASE, SURFACING, & SHOULDERS	0	0	0	0	0	0	4,366	
6. R.R. GRADE SEPARATIONS	0	0	0	0	0	0	0	
7. HIGHWAY GRADE SEPARATIONS WITHOUT RAMPS	0	0	0	0	0	0	3,348	
8. INTERCHANGES	0	0	0	0	0	0	3,227	
9. OTHER BRIDGES, TUNNELS, AND WALLS	0	0	0	0	0	0	0	
10. TRAFFIC CONTROL DEVICES	0	0	0	0	0	0	256	
11. WEIGH STATIONS, PEDESTRIAN AND BICYCLE FACILITIES	0	0	0	0	0	0	0	
12. SAFETY WORK ON COMPLETED SECTIONS	0	0	0	0	0	0	0	
13. NOISE ABATEMENT MEASURES	0	0	0	0	0	0	0	
14. ROADSIDE IMPROVEMENT A. LANDSCAPE PLANTING	0	0	0	0	0	0	0	
B. REST AREAS & OVERLOOKS	0	0	0	0	0	0	0	
15. ALL OTHER ITEMS: MAINT. OF TRAF., TRAINING, MOBIL, ETC.	0	0	0	0	0	0	419	
16. SUBTOTAL, LINES 4 THRU 15	0	0	0	0	0	0	12,908	
17. CONSTRUCTION ENGINEERING & CONTINGENCIES, 15% of LINE 16	0	0	0	0	0	0	1,936	
18. TOTAL COST OF CONSTRUCTION, LINES 16 & 17	0	0	0	0	0	0	14,846	
19. TOTAL ESTIMATE COST, LINES 1, 2, 3, & 18	0	0	0	0	0	0	15,096	

** ROUNDED TO ZERO

STATE: MARYLAND CODE: 24
ROUTE: 495

TABLE 9 - DESIGN CLASSIFICATION AND COST ESTIMATE BY ESTIMATE SECTIONS WITH ROUTE TOTALS

ITEM	ESTIMATE SECTION MILEPOST							TOTAL FOR ROUTE
	10.00	12.73	14.76					
1. FINANCE CODE	20	20	20					
2. SECTION LENGTH	2.73	2.03	0.50					15.26
3. CLASS: RURAL (R) OR URBAN AREA I.D. (NAME AND CODE)	U	U	U					
	796	796	796					
	WASHINGTON	WASHINGTON	WASHINGTON					
4. MILEAGE INCREMENT: CODE(1,2, OR 3)	1	1	1					
5. ROUTE SIGNIFICANCE: CODE (N OR L)	N	N	N					
6. DESIGN SPEED (V)	60	60	60					
7. BASE YEAR TRAFFIC (1982 ADT)	129,800	129,800	129,800					
8. TRAFFIC A. DESIGN YEAR	1990	1990	1990					
B. ADT DESIGN YEAR	125,000	140,000	150,000					
C. DHV DESIGN YEAR	13,000	14,000	15,000					
D. DIRECTION DISTRIBUTION FACTOR	55	55	55					
E. T% TRUCKS DESIGN YEAR DHV	09	09	09					
F. T% TRUCKS DESIGN YEAR ADT	11	11	11					
9. NUMBER LANES TO BE CONSTRUCTED THIS ESTIMATE	00	00	00					
10. ULTIMATE NUMBER THROUGH TRAFFIC LANES	08	08	08					
11. TYPICAL CROSS-SECTION REFERENCE	363	312	314					
12. RIGHT-OF-WAY WIDTH: PREVAILING	200	200	300					
13. MEDIAN WIDTH: PREVAILING	16	16	30					
14. STATUS OF DEVELOPMENT DEC. 31, 1983 (PR-511)	1A1F	1A1F	1A1F					
WORK CLASSIFICATION	ESTIMATED COSTS (1,000 DOLLARS)							
1. PRELIMINARY ENGINEERING	0	0	0					
2. R.O.W. A. ACQUISITION	0	0	0					
B. RELOCATION	0	0	0					
3. UTILITY ADJUSTMENTS	0	0	0					250
4. EROSION CONTROL, CLEAR, GRUB, GRADE, DRAIN, & MINOR STRUCTURES	0	0	0					1,292
5. SUBBASE,BASE, SURFACING, & SHOULDERS	0	0	0					4,366
6. R.R. GRADE SEPARATIONS	0	0	0					
7. HIGHWAY GRADE SEPARATIONS WITHOUT RAMPS	0	0	0					3,348
8. INTERCHANGES	0	0	0					3,227
9. OTHER BRIDGES, TUNNELS, AND WALLS	0	0	0					
10. TRAFFIC CONTROL DEVICES	0	0	0					256
11. WEIGH STATIONS, PEDESTRIAN AND BICYCLE FACILITIES	0	0	0					
12. SAFETY WORK ON COMPLETED SECTIONS	0	0	0					
13. NOISE ABATEMENT MEASURES	0	0	0					
14. ROADSIDE IMPROVEMENT A. LANDSCAPE PLANTING	0	0	0					
B. REST AREAS & OVERLOOKS	0	0	0					
15. ALL OTHER ITEMS: MAINT. OF TRAF., TRAINING, MOBIL, ETC.	0	0	0					419
16. SUBTOTAL, LINES 4 THRU 15	0	0	0					12,908
17. CONSTRUCTION ENGINEERING & CONTINGENCIES, 15% of LINE 16	0	0	0					1,936
18. TOTAL COST OF CONSTRUCTION, LINES 16 & 17	0	0	0					14,846
19. TOTAL ESTIMATE COST, LINES 1, 2, 3, & 18	0	0	0					15,096

** ROUNDED TO ZERO

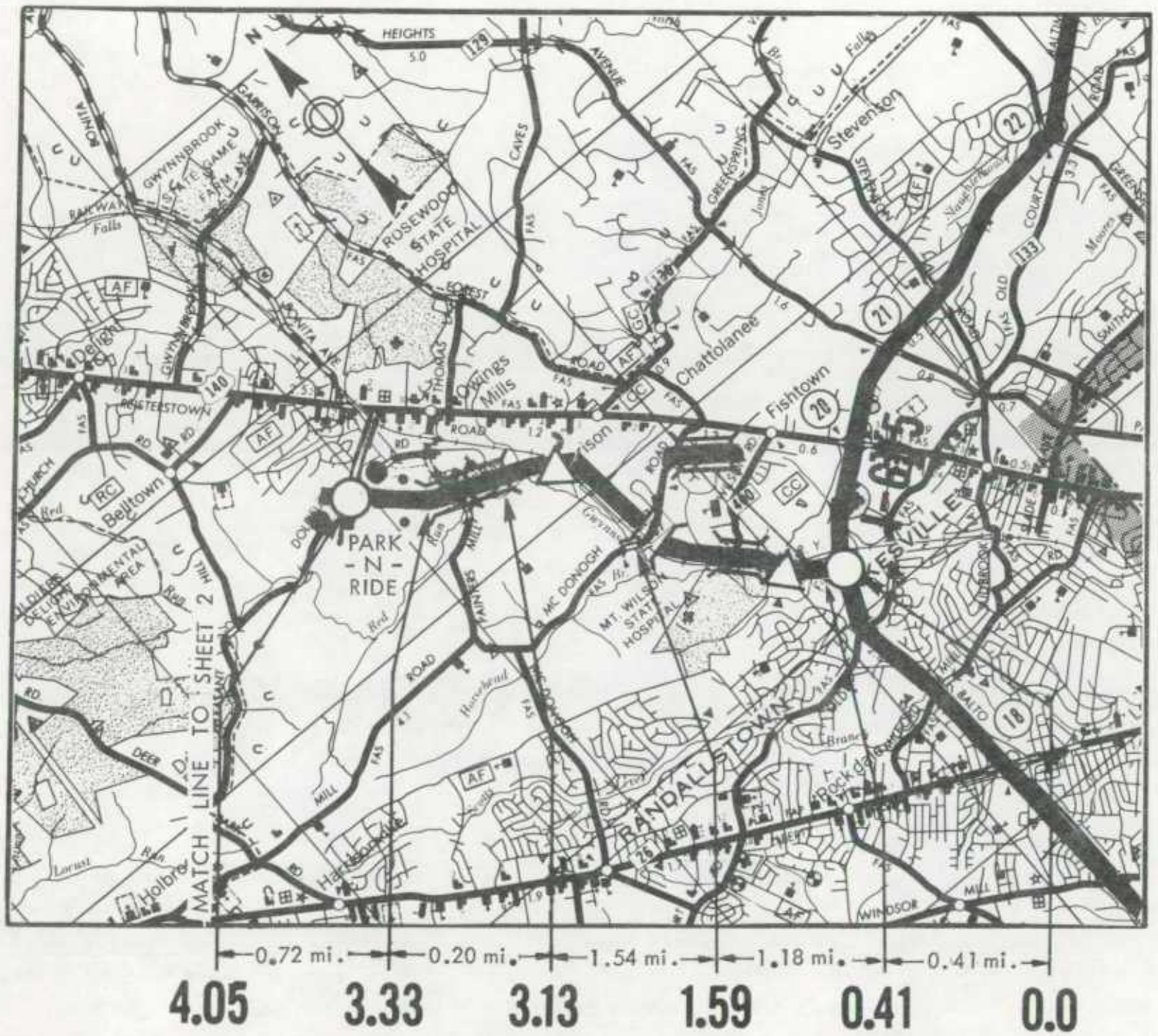

LEGEND

- Interstate Location Status 4 thru 1
- Interstate Location Status 5a(2) or 5a(3)
- Segments Approved Under Section 139 Title 23, USC, (non-chargeable).
- Interchange
- Highway Grade Separation -No Connection
- Railroad Grade Separation
- Combination Highway-Railroad Grade Separation
- Other Bridge
- Tunnel
- TOLL — Toll Bridge, Tunnel, Highway or Combination
- Frontage Road
- Terminated Cross Road
- Intersection At-Grade
- U U — Urban Area Boundary
- Safety Rest Area
- 13 — Post Mileage
- 1 2 — Route Sections
- 2.8 — Estimate Section Number

MARYLAND

INTERSTATE ROUTE 795

SHEET 1 OF 2

DATE: DECEMBER 31, 1985

SCALE IN MILES

0 1 2

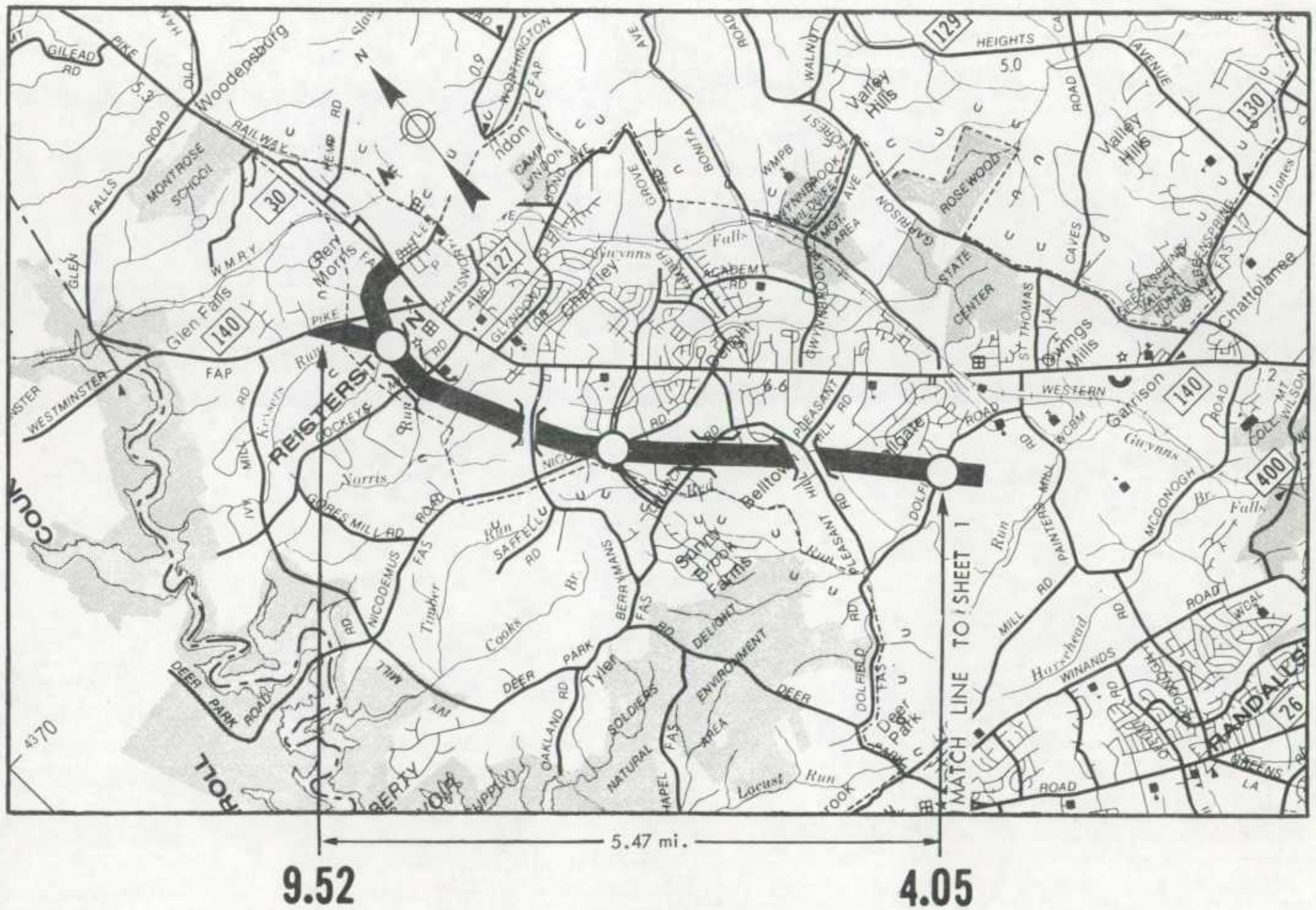

INTERSTATE ROUTE 795

SHEET 2 OF 2

STATE: MARYLAND CODE: 24
ROUTE: 795

TABLE 3 - DESIGN CLASSIFICATION AND COST ESTIMATE BY ESTIMATE SECTIONS WITH ROUTE TOTALS

ITEM	ESTIMATE SECTION MILEPOST							TOTAL FOR ROUTE
	0.00	0.41	1.59	3.13	3.33	4.05		
1. FINANCE CODE	22	22	22	22	22	20		
2. SECTION LENGTH	0.41	1.18	1.54	0.20	0.72	5.47		9.52
3. CLASS: RURAL (R) OR URBAN AREA I.D. (NAME AND CODE)	U	U	U	U	U	U		
	256	256	256	256	256	256		
	BALTIMORE	BALTIMORE	BALTIMORE	BALTIMORE	BALTIMORE	BALTIMORE		
4. MILEAGE INCREMENT: CODE(1,2, OR 3)	1	1	1	1	1	3		
5. ROUTE SIGNIFICANCE: CODE (N OR L)	L	L	L	L	L	L		
6. DESIGN SPEED (V)	70	70	70	70	70	70		
7. BASE YEAR TRAFFIC (1982 ADT)	48,510	48,510	48,510	48,510	48,510	19,910		
8. TRAFFIC A. DESIGN YEAR	2004	2004	2004	2004	2004	2004		
B. ADT DESIGN YEAR	107,300	107,300	107,300	107,300	107,300	45,400		
C. DHV DESIGN YEAR	6,364	6,364	6,364	6,364	6,364	3,178		
D. DIRECTION DISTRIBUTION FACTOR	58	58	58	58	58	60		
E. T% TRUCKS DESIGN YEAR DHV	06	06	06	06	06	07		
F. T% TRUCKS DESIGN YEAR ADT	11	11	11	11	11	11		
9. NUMBER LANES TO BE CONSTRUCTED THIS ESTIMATE	00	00	00	00	00	00		
10. ULTIMATE NUMBER THROUGH TRAFFIC LANES	06	06	06	06	06	04		
11. TYPICAL CROSS-SECTION REFERENCE	404	404	404	404	404	343		
12. RIGHT-OF-WAY WIDTH: PREVAILING	300	300	300	300	300	300		
13. MEDIAN WIDTH: PREVAILING	64	64	64	64	64	58		
14. STATUS OF DEVELOPMENT DEC. 31, 1983 (PR-511)	1A3F	1A3F	1A3F	1A3F	1A3F	3B3		
WORK CLASSIFICATION	ESTIMATED COSTS (1,000 DOLLARS)							
1. PRELIMINARY ENGINEERING	0	0	0	0	0	0		
2. R.O.W. A. ACQUISITION	0	0	0	0	0	0		
B. RELOCATION	0	0	0	0	0	0		
3. UTILITY ADJUSTMENTS	0	0	0	0	0	0		
4. EROSION CONTROL, CLEAR, GRUB, GRADE, DRAIN, & MINOR STRUCTURES	0	0	0	0	312	0		312
5. SUBBASE,BASE, SURFACING, & SHOULDERS	0	0	0	0	393	0		393
8. R.R. GRADE SEPARATIONS	0	0	0	0	0	0		
7. HIGHWAY GRADE SEPARATIONS WITHOUT RAMPS	0	0	0	0	0	0		
8. INTERCHANGES	0	0	0	0	0	0		
9. OTHER BRIDGES, TUNNELS, AND WALLS	0	0	0	0	0	0		
10. TRAFFIC CONTROL DEVICES	0	1	2	0	460	0		463
11. WEIGH STATIONS, PEDESTRIAN AND BICYCLE FACILITIES	0	0	0	0	0	0		
12. SAFETY WORK ON COMPLETED SECTIONS	0	0	0	0	0	0		
13. NOISE ABATEMENT MEASURES	0	0	0	0	0	0		
14. ROADSIDE IMPROVEMENT A. LANDSCAPE PLANTING	0	0	0	0	0	0		
B. REST AREAS & OVERLOOKS	0	0	0	0	0	0		
15. ALL OTHER ITEMS: MAINT. OF TRAF., TRAINING, MOBIL, ETC.	46	131	172	22	227	0		598
16. SUBTOTAL, LINES 4 THRU 15	46	132	173	22	1,391	0		1,764
17. CONSTRUCTION ENGINEERING & CONTINGENCIES, 15% of LINE 16	7	20	26	3	208	0		264
18. TOTAL COST OF CONSTRUCTION, LINES 16 & 17	53	152	199	26	1,601	0		2,031
19. TOTAL ESTIMATE COST, LINES 1, 2, 3, & 18	53	152	199	26	1,601	0		2,031

** ROUNDED TO ZERO

TABLE C - COST ESTIMATES BY ROUTES AND STATE TOTAL

STATE MARYLAND

(Includes all costs to complete the system, all eligible finance codes: 10, 20, 21, 22, 23 and 25)

INTERSTATE ROUTE NUMBER	68		95		97		195		270		SUBTOTAL		TOTAL
CLASS: RURAL OR URBAN (R OR U)	RURAL	URBAN	RURAL	URBAN	RURAL	URBAN	RURAL	URBAN	RURAL	URBAN	RURAL	URBAN	
LENGTH, MILES	8.52	11.57	35.30	73.38	12.09	5.48	.00	4.93	6.85	27.67			
WORK CLASSIFICATION	ESTIMATED COSTS (1,000 DOLLARS)												
1. PRELIMINARY ENGINEERING	0	0	0	0	0	0	0	0	0	0			
2. R.O.W. A. ACQUISITION	4,480	7,220	0	0	7,230	2,722	0	850	0	4,400			
B. RELOCATION	0	0	0	0	0	0	0	0	0	0			
3. UTILITY ADJUSTMENTS	1,127	6,586	0	0	3,126	1,572	0	1,437	0	1,114			
4. EROSION CONTROL, CLEAR, GRUB, GRADE, DRAIN, MINOR STRUCT.	9,443	23,906	0	0	32,473	22,731	0	1,057	1,216	11,442			
5. SUBBASE, BASE, SURFACING, & SHOULDERS	12,378	44,095	0	0	25,781	38,548	0	812	4,738	18,429			
6. R.R. GRADE SEPARATIONS	0	0	0	0	0	0	0	0	0	0			
7. HIGHWAY GRADE SEPARATIONS WITHOUT RAMPS	7,489	18,180	0	0	9,395	7,129	0	0	0	4,478			
8. INTERCHANGES	38,347	37,820	0	0	12,130	34,815	0	43,775	0	13,260			
9. OTHER BRIDGES, TUNNELS, AND WALLS	979	3,248	0	0	3,755	3,055	0	0	0	9,994			
10. TRAFFIC CONTROL DEVICES	2,756	2,671	0	0	2,669	2,248	0	145	1,012	4,819			
11. WEIGH STATIONS, PEDESTRIAN AND BICYCLE FACILITIES	0	0	0	0	0	0	0	0	0	0			
12. SAFETY WORK ON COMPLETED SECTIONS	0	0	0	0	0	0	0	0	0	0			
13. NOISE ABATEMENT MEASURES	2,204	6,071	0	650	1,740	10,790	0	0	0	9,814			
14. ROADSIDE IMPROVEMENT A. LANDSCAPE PLANTING	0	0	0	0	0	0	0	0	0	0			
B. REST AREAS & OVERLOOKS	0	0	0	0	0	0	0	0	0	0			
15. ALL OTHER ITEMS	1,505	5,488	0	0	5,560	4,363	0	145	229	3,314			
16. SUBTOTAL, LINE 4 THRU 15	75,098	141,481	0	660	93,500	123,679	0	45,934	7,195	75,550			
17. CONSTRUCTION ENG'R & CONTINGENCIES, 15% OF LINE 16	11,266	21,221	0	99	14,026	18,552	0	6,891	1,079	11,335			
18. TOTAL COST OF CONSTRUCTION, LINES 16 & 17	86,365	162,704	0	759	107,523	142,229	0	52,824	8,275	86,881			
19. TOTAL ESTIMATE COST, LINES 1, 2, 3, & 18	91,972	176,510	0	759	117,979	146,523	0	55,111	8,275	92,395			
20. ROUTE TOTAL, RURAL PLUS URBAN	268,482		759		264,402		55,111		100,670				

TABLE C - COST ESTIMATES BY ROUTES AND STATE TOTAL

STATE MARYLAND

(Includes all costs to complete the system, all eligible finance codes: 10, 20, 21, 22 23 and 25)

INTERSTATE ROUTE NUMBER	370		395		495		795				SUBTOTAL		TOTAL
CLASS: RURAL OR URBAN (R OR U)	RURAL	URBAN	RURAL	URBAN	RURAL	URBAN	RURAL	URBAN	RURAL	URBAN	RURAL	URBAN	
LENGTH, MILES	.00	2.67	.00	.72	.00	15.26	.00	9.52	.	.	62.96	151.20	
WORK CLASSIFICATION	ESTIMATED COSTS (1,000 DOLLARS)												
1. PRELIMINARY ENGINEERING	0	0	0	0	0	0	0	0					
2. R.O.W. A. ACQUISITION	0	0	0	0	0	0	0	0			11,710	15,192	26,902
B. RELOCATION	0	0	0	0	0	0	0	0					
3. UTILITY ADJUSTMENTS	0	0	0	0	0	250	0	0			4,253	10,959	15,212
4. EROSION CONTROL, CLEAR, GRUB, GRADE, DRAIN, MINOR STRUCT.	0	0	0	0	0	1,292	0	312			43,132	60,740	103,872
5. SUBBASE, BASE, SURFACING, & SHOULDERS	0	0	0	0	0	4,366	0	393			42,897	106,643	149,540
6. R.R. GRADE SEPARATIONS	0	0	0	0	0	0	0	0					
7. HIGHWAY GRADE SEPARATIONS WITHOUT RAMPS	0	1,660	0	0	0	3,348	0	0			16,884	34,795	51,679
8. INTERCHANGES	0	0	0	0	0	3,227	0	0			50,477	132,897	183,374
9. OTHER BRIDGES, TUNNELS, AND WALLS	0	0	0	0	0	0	0	0			4,734	16,297	21,031
10. TRAFFIC CONTROL DEVICES	0	0	0	0	0	256	0	463			6,437	10,602	17,039
11. WEIGH STATIONS, PEDESTRIAN AND BICYCLE FACILITIES	0	0	0	0	0	0	0	0					
12. SAFETY WORK ON COMPLETED SECTIONS	0	0	0	0	0	0	0	0					
13. NOISE ABATEMENT MEASURES	0	0	0	455	0	0	0	0			3,944	27,790	31,734
14. ROADSIDE IMPROVEMENT A. LANDSCAPE PLANTING	0	0	0	0	0	0	0	0					
B. REST AREAS & OVERLOOKS	0	0	0	0	0	0	0	0					
15. ALL OTHER ITEMS	0	0	0	0	0	419	0	598			7,294	14,327	21,621
16. SUBTOTAL, LINE 4 THRU 15	0	1,660	0	455	0	12,908	0	1,764			175,793	404,091	579,884
17. CONSTRUCTION ENG'R & CONTINGENCIES, 15% OF LINE 16	0	249	0	68	0	1,936	0	264			26,371	60,615	86,986
18. TOTAL COST OF CONSTRUCTION, LINES 16 & 17	0	1,909	0	523	0	14,846	0	2,031			202,163	464,706	666,869
19. TOTAL ESTIMATE COST, LINES 1, 2, 3, & 18	0	1,909	0	523	0	15,096	0	2,031			218,126	490,857	708,983
20. ROUTE TOTAL, RURAL PLUS URBAN	1,909		523		15,096		2,031		,	,			

TABLE D COST OF INTERSTATE BOND PROJECTS, ACI AND ADVANCE ACQUISITION PROJECTS

(PROJECTS COMPLETED OR IN AUTHORIZED STATUS AS OF JANUARY 1, 1986)

STATE OF MARYLAND

INTERSTATE ROUTE	ESTIMATE SECTION	PROJECT NO.	WORK CLASS	RURAL OR URBAN	ACTUAL OR ESTIMATED PROJECT COST ($1000)		TOTAL COST ($1000)
					FEDERAL (I) FUNDS	STATE MATCHING	
STATEWIDE INTERSTATE P.E. PROJECT		I-EST-87(001)	—	—	86	10	96
I-95	26.35 - 27.39	AC-I-95-3(109)	CON	U	18,273	2,030	20,303
I-97	4.62 - 6.31	AC-I-97-1(32)	CON	U	9,054	1,007	10,061
I-195	2.54 - 2.88	AC-I-195-6(76)	CON	U	2,506	278	2,784
I-270	80.77 - 82.50	AC-I-270-7(118)	CON	U	3,056	368	3,424
I-370	0.00 - 0.68	AC-I-370-1(10)	CON	U	33,269	7,235	40,504
I-370	0.68 - 1.63	AC-I-370-1(11)	CON	U	16,584	1,842	18,426
I-195	2.54 - 2.88	AC-I-195-6(76)	CON	U	10,035	0	10,035
TOTAL	—	—	—	—	92,863	12,770	105,633

THE ABOVE PROJECTS ARE NOT INCLUDED IN TABLE 'B' OR TABLE 'C'