Maryland Historical Magazine

Published Quarterly by The Museum and Library of Maryland History
The Maryland Historical Society
Spring 1985

MARYLAND HISTORICAL MAGAZINE (ISSN 0025-4258) is published quarterly by The Museum and Library of Maryland History, The Maryland Historical Society, 201 W. Monument St., Baltimore, Md. 21201. Second class postage paid at Baltimore, Md. and at additional mailing offices. POSTMASTER please send address changes to the MARYLAND HISTORICAL SOCIETY, 201 W. Monument St., Baltimore, Md. 21201.

Composed and printed by Waverly Press, Inc., Baltimore, Md. 21202.

MARYLAND HISTORICAL MAGAZINE

Volume 80
Number 1
Spring 1985
ISSN–0025–4258

CONTENTS

Book Reviews

MARYLAND MAGAZINE OF GENEALOGY

Book Notes

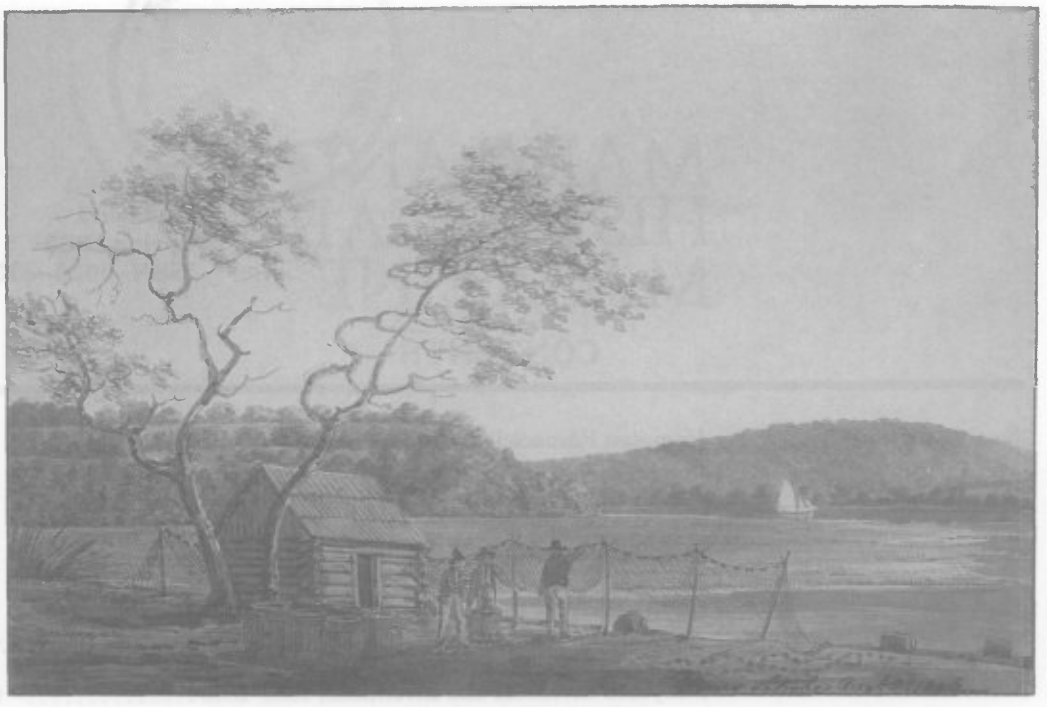

"View from the Packet Wharf at French town . . ."
B[enjamin] Henry Latrobe, [After 4] August 1806
Pencil, pen and ink, and watercolor. 21.6 cm. × 30.5 cm.
Collection of Jack Latrobe

Benjamin Henry Latrobe (1764–1820) is generally acknowledged as America's first professional architect and engineer. During the quarter-century between his immigration from England in 1796 and his untimely death from yellow fever in New Orleans in 1820, he executed some of the most influential commissions in the nation's history, such as the Virginia State Penitentiary in Richmond, the Philadelphia Waterworks and the Bank of Pennsylvania in that city, the Baltimore Roman Catholic Cathedral, and St. John's Church and the United States Capitol in Washington, D.C. Less well known than his professional progeny is the legacy he left in pictures. Latrobe was a gifted artist, and as he traveled around his adopted land he sketched virtually every facet of the American scene: landscapes; town views; natural history subjects; architectural subjects such as mansions, churches, and taverns; technological subjects such as mills, bridges, quarries, and factories; and genre scenes or views of everyday life, depicting dress and diversions. In short, almost nothing escaped Latrobe's keen eye. Aside from the sheer beauty of his watercolors, Latrobe's sketchbooks have an even greater claim on our attention, for they are without parallel as graphic depictions of the early Republic. Published travelers' accounts from the period are legion, but there is no comparable collection of drawings by a trained artist that truly shows what America looked like then. Latrobe's sketchbooks are indeed invaluable historical documents.

For the past fifteen years, the Maryland Historical Society has been sponsoring the documentary editing project of The Papers of Benjamin Henry Latrobe. To date the project has produced a complete microfiche edition of all known Latrobe documents—letters, journals, sketches, architectural and engineering drawings, etc.—and has published six of what will be a nine-volume selected printed edition. The most recently published volume is the highlight of the series—*Latrobe's View of America, 1795–1820: Selections from the Watercolors and Sketches*. The book reproduces 160 of Latrobe's beautiful drawings, forty of them in color. On the cover of this issue is just one of the many Maryland scenes—"View from the Packet Wharf at French town."

Frenchtown, like so many other small towns in America, existed as a link in a transportation network. It survived as long as the route of which it formed a part facilitated the movement of travelers and freight, and it died when that route was abandoned. For many years, Frenchtown was an important transfer point on the packet route between Philadelphia and Baltimore. The traveler starting from Philadelphia would sail south along the Delaware River to New Castle, Delaware. From there, he would journey west by stage across the Delmarva Peninsula to Frenchtown at the head of Elk River two miles south of Elkton. At Frenchtown, he would board a packet boat and sail south down the Elk River to the Chesapeake Bay, and then head further southward along the bay to Baltimore.

The site of Frenchtown was first settled by Swedes before 1700. In 1755, French Acadians expelled from Nova Scotia migrated to this area and named their new village *la ville Française*. Latrobe became well acquainted with Frenchtown when he surveyed the area in planning for the Chesapeake and Delaware Canal. In making this drawing, Latrobe looked southeastward in order to sketch the landscape stretching down the Elk River. Pate's Creek, now called Perch Creek, flows in from the left. In the distance is the upper part of Back Creek Neck. In the foreground, Latrobe animated the scene with three figures clustered about a cabin, several barrels, and a hanging fishing net.

Hampton Furnace in Colonial Frederick County

BASIL L. CRAPSTER

THE VICTORIES AND THEN THE CONCLUSION of the Seven Years War released a burst of energy in the mountains and valleys of western Maryland and the regions bordering them. Offered the prospect of a new security, speculators, developers, settlers, and assorted entrepreneurs moved into the region to claim new lands, clear new farms, lay out new towns, and start new businesses. Capital and entrepreneurial talent, or at least ambitions, were often supplied by gentry from the lower Tidewater who had already extended their activities beyond management of their plantations. Of course, not all of these new ventures lived up to expectations. A new town was easier to lay out than to develop and a new firm might run into unexpected and costly difficulties. One such unfortunate venture was the Hampton Company, an iron-making operation in upper Frederick County.

The Hampton Company left traces of its existence in land and court records for decades after its demise.[1] It is mentioned in histories of the area, if often ambiguously or contradictorily, and always very briefly.[2] No company records have been located. There is no large collection of correspondence to mine. Its name survives in Hampton Valley, beginning a mile west of Emmitsburg, in northern Frederick County. There is clear evidence that it existed and was a failure. This article explores how far beyond that one may venture.

It is well known that the proprietary government sought to encourage the establishment of furnaces and forges for the charcoal smelting of iron ore and the first stages of its processing through the offer of 100 acres of free land and the exemption of the work force from road and militia duty.[3] An entrepreneur needed an ore bank; a plentiful supply of timber for charcoal; water for power; communications by land or water; a core of managerial and technical skills; unskilled labor; and capital. Deposits of iron ore were found in a number of places in Frederick County. Timber covered the mountains. Mountain streams could be dammed. The optimist could envision water transportation on the Monocacy River system and an enlarged road network. Both trained and unskilled labor was not in great supply but could be produced—at a price. Capital too was in short supply, but there were those with it or at least with superior access to credit. Bringing these factors of production together was the task of the five partners of Hampton Company, four of whom were planters, speculators, and businessmen rooted in the southern Tidewater.

Benedict Calvert (c. 1724–1788) of Annapolis and "Mount Airy," Piscataway, Prince George's County, certainly possessed an illustrious name.[4] An illegitimate son of Charles, the fifth Lord Baltimore, he married Elizabeth, the daughter of former governor Charles Calvert. With such connections, it is not surprising that he held several offices in the proprietary government and was active in politics. With the opening of the territory west of the Monocacy, he added large tracts there to his lots in Annapolis and already extensive holdings in Prince George's County. In the course of many transactions he had dealings with iron-making families like those of Zacheus Onion,[5] Lancelot Jacques[6] and Thomas Johnson.[7] Indeed, in 1763 at the very time when the Hampton Company was

Dr. Crapster is Chairman of the Department of History, Gettysburg College.

MARYLAND HISTORICAL MAGAZINE
VOL. 80, NO. 1, SPRING 1985

getting started, Calvert took steps to join Fielder Gaunt, a well-known iron master, in an iron works, withdrawing (for unknown reasons) only when he discovered that James Hunter was to be a partner.[8]

Two other Hampton partners, the brothers Edward Digges (–1769) of St. Mary's County and William Digges Jr. (–1806) of Prince George's County, were following in the footsteps of their father, John Digges of St. Mary's County and Conewago, who laid claim to thousands of acres in Maryland and the disputed Pennsylvania borderlands, where he himself settled.[9] The brothers inherited much of this land and tried to develop it. For example, at the time of the Hampton venture Edward and his brother-in-law Raphael Taney laid out nearby Taneytown in present-day Carroll County.

The fourth of the gentlemen-adverturers was Normand Bruce (1733-1811), born in Edinburgh to a family well-settled in the business community.[10] The last trace of him found in Scotland was in 1755; by 1758 he was in St. Mary's County, connected in some capacity with the Glasgow firm of John Glassford and Company.[11] There his younger brother Andrew (1744-1815), a lawyer, joined him. By 1761 Normand was sufficiently well accepted to marry Susannah Gardner Key, daughter of Philip Key of St. Mary's County. From this vantage point he went from success to success. In the year of his marriage he was appointed sheriff of St. Mary's County. It must have been shortly after the expiration of his shrievalty in 1764 that he moved to rapidly-developing Frederick County to establish his home where the road to York crossed Big Pipe Creek. He inherited land from the Keys and patented and bought considerably more as well as engaging in other enterprises. He also was active in public affairs, becoming sheriff of Frederick County in 1768 for three years. Bruce must have had a reputation as a man with a head for business for he appears in many public and private ventures where the skills of a businessman were called for.

Almost concurrent with the Hampton venture, "Normand Bruce, ironmaster," may have been involved in a similar abortive project, centered on the tract, "Iron Intention" lying between present-day Westminster and the then Baltimore-Frederick County line. Admittedly, the supposition rests only on Bruce's connection with a tract so-named, assuming that the name referred to the expectation of making iron along Cranberry Creek and was not an imaginative reference to some fixity of purpose, or a real estate scam. In 1763 Edward Brown owned a small tract, "Guard House," surrounded by a large vacancy in Frederick and Baltimore Counties. It was arranged that Bruce would finance a special warrant, a resurvey, and the patenting of what turned out in 1766 to be the 3675 acre "Iron Intention," with a pre-existing small farm. The patent was issued in Brown's name as trustee for the ultimate diversion of the property. This eventually led to considerable litigation, in the records of which there is no mention of the fruition of any plans-if such there ever had been-of development of an iron works.[12]

About the fifth of the original Hampton partners, James Kennedy, the least is known.[13] Although Bruce briefly shared with him the occasional identification of "ironmaster," it seems likely that, with his many interests and residence 20 miles away from the site, Bruce was the overall supervisor, keeping his eyes on things for himself and the far-off Digges and Calvert families, while Kennedy was the technically-trained manager on the spot.

Indeed, at the time the Hampton Company was getting established, Kennedy was starting another iron operation—a furnace and forge on Antietam Creek. In 1766, possibly from over extending himself in both ventures, he mortgaged his Antietam and Hampton properties for £900 Pennsylvania for a year to Daniel and Samuel Hughes, Baltimore county merchants with active interests in ironworks. At that time the Antietam property consisted of 250 acres on Antietam Creek recently purchased from Samuel Backet, a forge "building and erecting" there, and 1200 acres of unimproved land in Cumberland County, Pennsylvania.[14] Since the mortgage also covered pig iron, iron ore, and equipment for fur-

nace and forge at the site, perhaps a furnace was already in at least partial operation.

To complete this part of the story, Kennedy must have recovered the property because in 1768 he leased the Antietam forge (apparently the entire ironworks) to David Stoner, a farmer in Cumberland County, Pennsylvania, for three years.[15] The property was described as containing a dwelling house with outbuildings and garden, blacksmith's tools "and other necessaries." Stoner was to pay £3 Pennsylvania for every ton of bar iron made or drawn. Payment could be made in bar iron at the rate of £16 Pennsylvania per ton, payable in four quarters a year. Stoner was allowed to cut timber and burn charcoal on Kennedy's land in Cumberland County. Kennedy was to pay Stoner the cost of covering the forge, while Stoner was to repair the dam, all of which suggest the possibility of either an unfinished or a damaged operation. If the dam then broke, Stoner was to repair it once, after which repairs were Kennedy's responsibility. Out of the third year's rent Stoner was to keep back sufficient money to cover Kennedy's debts to him. Finally, Kennedy's wife was to be permitted to live in the dwelling for six months and to be provided with provisions, apparently indicating that Kennedy was off on another venture. But in the heady days when the Hampton Company was founded all that lay in the future.

Interest in the potential of the Tom's Creek area for an iron workings is suggested as early as 1761 when James Patterson, identified as a farmer of Frederick County, patented "Vulcans Lot," fifty acres on the south side of the tributary Friends Creek.[16] Possibly then or shortly thereafter Patterson was acting for the Hampton partnership since in 1767 the partners transferred the tract to him, stating that it was in his possession, as well as a small piece of their adjoining land.[17] Whether or not this was their first exploratory venture in the area, they soon moved into it in a major way.

On 1 June 1759 Capt. Joseph Ogle of Frederick County patented a 66 acre tract called "Hogg Hall" on the east side of Friends Creek "in the Lock of the Mountains," an apt description of the valley.[18] It was still barely developed for farming after passing through several hands, when on 3 June 1762 John Money of Frederick County received a warrant for resurvey to take in vacancies. This was in turn assigned in 1763 to John Lilly and James Kennedy. Lilly, a member of a pioneering Catholic family of the region, may already have been acting for his relatives, the Digges, while the company (sometimes referred to as "Benedict Calvert and Company," more often as the "Hampton Company") was being formed.[19] The resurvey was made on 20 May 1763. Then, in a paper transaction 19 June 1764, the resurveyed tract was assigned to Edmund Key, who in turn transferred it to the five Hampton partners who had already patented it 12 November 1763 as "Carolina" with 3012 acres, with each partner holding interest in "one undivided moiety or fifth part." Beginning east of Friends Creek near its jointure with Tom's Creek, it stretched south and west along the provincial border and enclosed several tracts already taken up by others.

Additional property acquisitions expanded this already sizeable holding. On 21 June 1764 the Company patented 374 acres of "Resurvey on Hemets [Emmit's] Fancy" adjacent to the southeast on Turkey Run, having acquired John Lilly's 1761 certificate of resurvey.[20] It was here, on a shelf of land in narrow and steep-sided Hampton Valley, that the furnace was built.[21] "The Venture" was a 50-acre tract some distance to the south on the headwaters of Hunting Creek which perhaps was a pure land speculation, perhaps a beginning of acquisition of resources and access in that direction. A warrant had been taken out by John Davidson of Annapolis on 27 September 1766 and then assigned to Benedict Calvert, who had it surveyed 3 February 1767. On 23 January 1768 Calvert conveyed the land to the partners in the usual tenants in common form, and a patent was issued.[22]

The 5,000 acre "Carrollsburg" tract was originally one of Daniel Carroll's early holdings in the area, lying to the east of the Company's main block of land. In 1779 Andrew Bruce, Normand's brother, acquired 200 acres (lying at the western edge of present day Emmitsburg), which in 1793

he conveyed to Normand's son Upton, who in turn (for a nominal fee) conveyed it to the Hampton Company in 1795. In later land records this is referred to as "the Furnace tract" of "Carrollsburg."[23] Coming as it does at the time of the Company's final effort to dispose of its lands, this acquisition appears to be purely a land speculation, perhaps one that rounded out the value of the Company's original holding.

Transportation was clearly a critical need if these vast holdings were to be developed. Even as the patent for "Carolina" was issued, in the March court of 1764 the Frederick County justices ordered four local men to lay out a road from Hampton Furnace (which possibly was already under construction) to "Swoopes Works," going by John Shrior's on Tom's Creek.[24] Oddly, it is only in the following June court that a petition was recorded from the five partners "for themselves and many others" for the road from the Furnace "or thereabouts to go into the Stone Road that leads from Mr. Swoopes Works to Baltimore Town and then to Cross Tom's Creek at John Shrawers plantation and to cross Monockesy where Thomas Wilson did live."[25] Apparently the petitioners' argument that this would be the most convenient road to cross South Mountain for all those in that part of the county was sufficient for the justices. They received the commissioners' favorable report during the same court, to ordain construction, continuing the road over Monocacy and Pipe Creek, crossing the York–Frederick Road, and connecting with the road to Baltimore.[26] This road was still shown on country road lists at least through the Revolution.

An advertisement in the *Maryland Gazette* on May 28, 1767 describes the ironworks when it was ready to become fully operative:

TO BE SOLD

Hampton Furnace, in *Frederick* County, *Maryland*, together with upwards of 3000 Acres of Land, all of which is remarkably well wooded. The Furnace, with Casting Bellows, and Bridge Houses, are all built of Stone, and compleatly and substantially finished, with a good Grist-Mill Two Stories high, built also of Stone: They are situated upon a Branch of *Monocasy* which never fails, nor can any of the Works be injured by the largest floods: There is likewise finished, a large commodious Coal-House, with all other convenient Houses; also a very compleat Farm, within a Quarter of a Mile of the Furnace, upon which is above Fifty Acres of Meadow prepared, and Forty more will be easily cleared, all exceeding good, and in one Body.—There will also be Sold, the whole Stock of Negroes, Servants, Horses, Waggons, &c. belonging to the Works: There is Six Months Coal at the Furnace, and about Fourteen Hundred Cord of Wood cut ready for Coaling: There is about Five Hundred Tons of Ore at the side of the Furnace, and about Four Hundred Tons more raised at the Bank. The Ore, of which there appears to be an inexhaustible Quantity, is extremely rich, and of a good quality, and easily raised—The Owners propose to sell immediately before they go in to blast—Time will be allowed for Payment of the best Part of the Money, upon Bond and Security—Any Person inclinable to purchase, may treat with *Normand Bruce*, who lives near, and will show the said Works.[27]

This fits the description of a typical iron furnace of the period, designed to produce pig iron to be sent elsewhere to a forge.[28] There is no mention of a dam, but one was clearly called for. The woods on the Company's land would provide plenty of timber. The ore bank was in York (now Adams) County, probably in that part of "Carolina" which the definitive Mason–Dixon survey placed in Pennsylvania.[29] The advertisement describes a new facility ready to be put into blast. It is of course just possible that this was always the intention, to build and then sell out. But if that was not the case, was the facility ever put into operation?

On this question there is disagreement. In his *History of Western Maryland*, J Thomas Scharf has this surprising statement: "In May, 1765, a bateau loaded with iron was successfully navigated from the Hampton furnace on Pipe Creek to the mouth of the Monocacy River, in Frederick County." He goes on to state that there is no record of the establishment of this furnace, but that it must have been in operation "for some time prior to the date given

above," giving as proof the (unattributed) advertisement of 1767 quoted above.[30]

This statement is suspect in a number of ways. That a flatboat could make its way down Tom's Creek places great demand on the historical imagination, even given the higher stream levels then and the possibility that spring freshets were still running in May. It is possible that iron was taken overland to the Monocacy at Wilson's Ford and down that river by boat, but even that would have been unusual indeed. Scharf is certainly wrong in placing the furnace on another branch of Monocacy, Pipe Creek. Perhaps Scharf was misled by the advertisement's statement that Bruce lived nearby. He did indeed live on Pipe Creek (at present-day Bruceville), about 20 miles away. It is just possible that, within a year of patenting the land, enough of the facilities were in place to make a sample run of iron, and that the advertisement's statement about readiness to go into blast meant continuous operation. But that the furnace was in operation "for some time prior" to May, 1765 seems unlikely, given the date of the acquisitions of the land and lack of other evidence.

A much later report gives a different story, with no sources indicated:

> Old Hampton Furnace was built between 1760 and 1765 on Toms Creek, 1½ miles west of Emmitsburg. Ore from the Catoctin ore banks was used before the Catoctin furnace was built. The furnace was soon abandoned for want of good ore.[31]

Perhaps ore did come from the company's southernmost land, such as "Venture," for a trial run in a primitive test furnace. Certainly, as has been shown, in 1766 the ore bank was described as being in Pennsylvania. The advertisement's description of its ore bank as of an "inexhaustable quantity, extremely rich, and of a good quality" may be written off as a seller's hyperbole. Perhaps the best evidence of suspension of activity is the lack of any evidence of operation in the ensuing years of accumulation of records. "Hampton Furnace" continues to appear for several decades in road and land records, but as a site, an area, not as an operation.

The picture of a dead enterprise, of partners anxious to get out, and of lack of buyers is confirmed by an advertisement placed by Normand Bruce in a Baltimore newspaper on October 3, 1773, which presumably refers to the Hampton venture.

> To be sold, a Grist Mill, *Furnace*, and other convenient Buildings, together with the lands thereto belonging, the Buildings of the Furnace may at a very small Expense be turned into a valuable Merchant Mill, as the stream on which it stands never fails. As the above will be sold cheap, and thereon may be erected a valuable and commodious Potash Works, at a very trifling expense. There is also adjoining a most valuable farm, with about 100 acres of good Meadow Ground, about 30 of which are cleared. The above will be sold separate or together, or may best suit the Purchaser; and if not disposed of before the 18th of next Month, will on that day be sold at Public Vendue, in Frederick Town. The terms may be known by applying to Normand Bruce, Esq.; at the Great Pipe Creek bridge, on the Main Road, leading from Pennsylvania to Virginia; who has likewise some other lands for sale.[32]

Changes in the original partnership were both a sign of the company's difficulties and, probably, a cause of further trouble. The first to go was James Kennedy who, as indicated above, mortgaged for a year his Antietam works in 1766 to Daniel and Samuel Hughes. Included in the mortgage was his fifth share in Hampton Furnace, "Carolina," and "Emmits Fancy." Although he recovered the properties, his financial position was becoming increasingly precarious. Starting in 1763, cases against him for recovery of debts became frequent in county court records.[33] Then in 1768 came the lease of the Antietam property for three years and sometime around then the loss of his share in Hampton Company to the other partners. In 1771 he was committed to the sheriff for failure to answer charges by the partners, and disappears from the scene.[34]

The will of Edward Digges was probated 18 December 1769, ordering that his lands, specifically including the Hampton works, be sold. Wilfred Neale of St. Mary's Company, a son-in-law, became trustee for the interests of physically impaired children.

His handling of the estate led to litigation and the appointment of Bernard O'Neill, another son-in-law, to continue efforts to sell land, all of which complicated the liquidation.[35] Calvert's interests after his death were handled by his wife Elizabeth and then by Lancelot Jacques. Bruce was having trouble of his own meeting debts. In 1792 he turned over extensive lands in Maryland and Virginia, including his quarter interest in the Hampton Company, to trustees to satisfy debtors. Sales cleared his debts and then interest in Hampton was among the property returned to him.[36]

Given a suspect industrial project, partners in financial difficulties, a confused ownership and control, the depressed times of the early 1770s, the Revolution, and then the difficult early years of peace, it is little wonder that the winding up of the operations was so protracted. A mere 191 acres in three small lots were sold in 1767, and then came inactivity until the times became more settled.[37] Perhaps recognizing that the aging Bruce, with financial troubles of his own, and busy with his own lands in western Maryland and Virginia, was no longer able to act as land agent for the Company, in 1796 the partners gave a power of attorney to Stephen Winchester, merchant of Frederick County, to dispose of the land.[38] This he began to do, making the first sale in the same year.[39] He proceeded vigorously to dispose of lots, even after moving to Baltimore and then to Spotsylvania County, Virginia. In 1803, Winchester gave a power of attorney to William Shields of Emmitsburg to dispose of the remaining 211 acres.[40] Like the Furnace, the Hampton Company was dead.

The story of Hampton Furnace is a reminder of difficulties in the way of industrial development in a country of great potential riches. If indeed the poor quality of the ore was the basic cause of failure, that too was the result, presumably not of fraud or luck, but rather of a failure of technical knowledge, probably on the part of Kennedy. But behind that the other partners exhibited a failure in entrepreneurship in entering into an agreement based on faulty knowledge and on allying themselves with Kennedy's precarious finances.[41] After that the confused and shifting ownership resulting from deaths of original partners and two decades of troubled times merely delayed the liquidation of a failure. What skill, and possibly some luck, could accomplish was illustrated at about the same time and a few miles to the south at Catoctin Furnace under the Johnsons.

REFERENCES

1. It is not known where the name, which is still applied in Hampton Valley, came from. Other than the obvious reference to England, there is perhaps relevance in the land tract of that name owned by the early Digges family in Virginia.
2. J. Thomas Scharf, *History of Western Maryland* (2 vols.; Philadelphia: Louis H. Everts, 1882), 11: 790–791. Michael D. Thompson, *The Iron Industry in Western Maryland* (Morgantown: West Virginia University, 1976) p. 40 and pp. 61–62 locates the furnace and the orebank incorrectly.
3. Good background and bibliography is provided by Michael W. Robbins, *Maryland's Iron Industry during the Revolutionary Era* (Annapolis: Maryland Bicentennial Committee, 1973). The Hampton Company is not mentioned.
4. See the outline of his career in Edward C. Papenfuse et al., *A Biographical Dictionary of the Maryland Legislature, 1635–1789* (Baltimore: The Johns Hopkins University Press, 1979) I pp. 184–185. There is no mention of the Hampton Company as such but his holdings with four partners in Frederick County are indicated as "Benedict Calvert and Company," a label often applied to the partnership.
5. For example, Provincial Court Deeds DD No. 2 f 25. Hall of Records, Annapolis, hereinafter referred to as HR.
6. For example, Provincial Court Deeds EI No. 9A f 670. HR.
7. For example, ibid., Deeds DD No. 4 f 550. HR.
8. Chancery Papers #21 p. 12. HR.
9. There is an incomplete sketch of the family in Effie Gwynn Bowie, *Across the Years in Prince George's County* (reprint Baltimore: Genealogical Publishing Co., 1975) pp. 248–267.
10. See the outline of his life in Edward C. Papenfuse et al., *Biographical Dictionary*, p. 177, which has errors. I plan to write more fully on his career.
11. On June 29, 1755, he was a witness at a baptism at Bruce Hill, the family's small estate at Corstorphine, a few miles west of Edinburgh. Register of Births and Baptisms, Parish of Corstorphine, National Register House, Edinburgh. On April 11, 1758 he paid money to Philip Key's account with John Ross, John Ross Account Book, MS729, Maryland Historical Society. Normand's father Charles mentions his friendship with Thomas Campbell, "merchant in Maryland," in the marriage bond of daughter Selkrieg Bruce and Robert Dodds, Edinburgh, photostat in possession of the author. The Glassford and Company connection appears in several places, for example the 1758

account of "Mr. Normand Bruce (for Jno. Glassford and Compy)" with Pagan and Co., Glasgow in John Glassford and Co. MSS, v. 146 (St. Mary's County) p. 179, Library of Congress.

12. There is a summary of the main elements in the story in the case Samuel Owings of Baltimore Town v. Edward Brown, James Brown, and Stephen Winchester, Chancery Records B50, f 355, ff. HR. Bruce sold the last of his interest in 1801.
13. Kennedy's background has not been discovered. He appears first in Frederick County in the land records of 1762 as will be described later. His first appearance in the Frederick Circuit Court records was in 1763 when Casper Heanly's suit against him for £6 was struck off. Frederick Co. Court, Judgment Record, November Court, 1763 f. 166. HR. Perhaps he was earlier connected with the "Kennedy's Forge" which makes a brief appearance in the road records in 1759 in the Bennets Creek area on the east side of the lower Monocacy. Frederick County Court, Judgement Records, August 1759, f. 600. HR.
14. Frederick County Land Records K f. 870. HR.
15. Ibid., L f. 536. HR.
16. Land Office, Patents BC&GS #17 f. 357. HR.
17. Frederick County Land Records K f. 1429. HR.
18. The land transactions are conveniently summarized in Land Office Records, Certificates BC&GS #19 f. 643 ff. and Patents BC&GS #22 f 39 ff. HR.
19. His relative Richard Lilly patented in 1764 two small tracts some distance to the south near the mouth of Great Hunting Creek, "Hampton Forest" and "Hampton Plain." These appear to have been a speculation on the development of the area, and not otherwise connected with the Hampton Company. Land Office, Patents BC&GS #23 f. 521 and BC&GS #22 f. 22. HR.
20. Land Office, Patents, BC&GS #19 f. 640. HR.
21. Positive identification of the furnace's location is contained in the deed to a nine acre tract, made 14 January 1815, Frederick County Land Records, TB1 f. 332 HR. I am grateful to my wife, Joan T. Crapster, for tracing the subsequent transfers of this tract to its acquisition 21 March 1947 by Charles R. and Ethel C. E. Miller, Frederick County Land Records 460 f. 599 HR. On 9 October 1979 they transferred about half the tract to Donald B. and Linda S. Miller. Frederick County Land Records 1097 f, 540 HR. The tract has not been explored, but from the road the remnants of what appears to be at least one stone dam can be seen; but that is downstream. A deed of 15 August 1818 mentions that William Shields had a saw mill in the next tract upstream, which may have utilized the old furnace dam. Frederick County Land Records J57 f. 327 HR. A deed of 22 July 1826 mentions that Shields had built a dam and a building for a powder mill. Frederick County Land Records JS 25 f. 545.
22. Land Office, Patents, BC&GS #33 f. 33. HR.
23. Provincial Court Deeds J63 f. 573 HR.
24. Frederick County Court Judgments, March 1764 p. 185. Little has been discovered about "Swopes Works," which soon disappear from the road records. They may have to do with Michael Swoop/Swope, merchant of York, Pennsylvania who patented 1075 acres as "York Company's Defence" and 3124 acres of "Brothers Inheritance" in 1760, selling most of both to William Buchanan, ironmaster and merchant of Baltimore and Frederick Counties, in 1768 (Frederick County Land Records M326 HR). In 1773 he and Buchanan separately and jointly transferred much land to Leigh Masters, ironmaster of Frederick County (Provincial Court Deeds DD5 p. 536 ff HR). Unfortunately for our purposes, all this land was in the Pipe Creek settlement in the eastern part of the then county. The other and more likely candidate, possibly a relative, is Benedict Swope, a Reformed minister and land speculator of Pipe Creek and Baltimore. Briefly in 1764 and 1765 he is referred to in deeds as "ironmaster, of Frederick County" (Frederick County Land Records JF.890 HR). He was also a partner in ventures with Buchanan, and in land transactions with him and Michael Swope.
25. Frederick County Court Judgments, June 1764, ff 233–234. HR.
26. Ibid., p. 235. HR.
27. *Maryland Gazette*, May 28, 1767.
28. It may be relevant to note an advertisement placed by "Franky Digges" in the *Maryland Gazette*, May 23 1765, for "a person well qualified to take upon himself the Management of a FURNACE at an ironworks." Typical ironworks and specific examples are given in Michael W. Robbins, *passim*.
29. Mortgage, James Kennedy to Daniel and Samuel Hughes, 18 June 1766, Frederick County Land Records K f. 870. HR. The Pennsylvania land shows up in the Resurvey of "Carolina," F. C. Patented Certificate of Survey #750, 1 July 1795, Land Office, HR.
30. Scharf, *Western Maryland*, II: 790–791.
31. Joseph T. Singewald, Jr., "Mineral Resources of Carroll, and Frederick Counties," in *The Physical Features of Carroll County and Frederick County* (Baltimore: Department of Geology, Mines, and Water Resources, State of Maryland 1946) 150.
32. *Maryland Journal and Public Advertiser*, October 3, 1773. On March 19, 1772 the estate of William Coughran of the Emmitsburg area carried a debt of £69 14/0 due from the Hampton Company as desperate.
33. Starting with Caspar Heanly's suit for £6, struck off probably because settlement was reached, Frederick County Court Judgments, November Court 1763 f. 166. HR. A suit involving an employee of the company, Caspar Smith, whose debt by the Company stood at £740 before the Revolution, is described in Chancery Papers 4593 HR.
34. Benedict Calvert Esq. and others against James Kennedy, April Court, 1771, Chancery B11 f. 30 and May Court, 1771, B12 f 34. HR.
35. A summary of the Digges's affairs can be gotten from Chancery Papers 3749–1 and Chancery Record 17 p. 375 ff and 18 p. 260 ff. HR.
36. Provincial Court Deeds 262 p. 534. HR.
37. Frederick County Land Records K f.1423, K f.1427, and K f.1430. HR.
38. Ibid., WR14, p. 473. HR.

39. Ibid., p. 649 HR. In preparation for sales the partners had their boundaries resurveyed at the beginning of 1795, Land Office, Patent Cert. Survey, Frederick County 750. HR.
40. Frederick County Land Records WR24 f. 578 HR.
41. See the careful investigations made primary to the establishment of another ironworks, the Baltimore Company, in Keach Johnson, "The Genesis of the Baltimore Ironworks," *Journal of Southern History* 19 (May, 1953): 157–179.

The Peales and Gas Lights in Baltimore

DAVID P. ERLICK

WHEN RUBENS PEALE JOURNEYED from Philadelphia to England in 1802 to assist his brother, Rembrandt, in exhibiting the bones of a mastodon, he saw the new gas lights. Thus began a chain of events that led to the introduction of gas in Baltimore, the first city to adopt this mode of lighting in America.

While his brother busied himself in his spare time taking painting lessons from Benjamin West, Rubens got caught up in the excitement of the new illumination which offered an alternative to candles and oil lamps. Very likely, he heard or read about the experiments of Phillipe Lebon in Paris who demonstrated his gas thermolampe, using wood to distill gas, and the work of William Murdoch in England who lighted his house with gas burned from coal and installed this type of lighting in Boulton and Watt's Foundry. No doubt he saw the experiments around London which later resulted in the lighting of Pall Mall and the organization of the first gas company in England.[1]

It was a period of new endeavors. People were becoming disillusioned with smoking whale oil lamps. Though considerably brighter than lamps fueled with oil rendered from whales, gas lights were not an unalloyed blessing. The vapor emitted a noxious odor when the connections or pipes leaked or when the coal was not burned completely; and the lime water through which the gas passed to remove impurities smelled so foully that in London it was carted through the streets surreptitiously at night or dumped in the river. Nevertheless, by December 1815 chartered companies covered London with 26 miles of gas mains.[2]

Before gas lights became a way of life in America, oil lamps and candles provided a semblance of flickering light. In colonial times the cities of Boston, New York, and Philadelphia maintained lamps on their major thoroughfares. But the expense was great, and the effort did nothing to allay the fears of those pedestrians forced to be out after nightfall.

Baltimore, however, during the colonial and Revolutionary periods was an "inconsiderable village," containing less than 30 houses.[3] Its streets were unpaved, hills were not cut down, and houses were small.[4] Street lighting didn't begin until after the Revolution when Jacob Lewis Betlinger signed a contract to erect and light 305 lamps with oil.[5]

But after the war Baltimore began to prosper, and by 1800, it contained more than 26,000 residents, over 6,000 houses, and ranked fourth among American cities in foreign trade.[6]

The inhabitants first witnessed gas lighting on March 11, 1802 when Benjamin Henfrey of Northumberland, Pennsylvania, revealed his "thermo–lamp," a process using a mixture of coal and wood to generate gas.

One spectator described how it worked:

> Into a cylinder of a foot in length and six inches in diameter, placed perpendicularly in a small coal fire, were put about two pounds of Baltimore coal, . . . and the same quantity wood; it was not long before the gas vapor was produced, and passing through a tin conductor into an adjoining room, made its appearance at the orifice of four tubes of half an inch diameter, made into a lamp placed on a pyramid for the occasion. The moment the inflammable gas came in contact with the blaze of the taper, it took fire and burned with a beautiful and

---

Mr. Erlick, a graduate of Harvard College, served in the O.S.S. in China in World War II. After his retirement from the Army as a civilian, he has been researching and writing on aspects of early American urban history.

> brilliant light, which two hours after continued equally vivid with the first instant of its being ignited. Another cylinder, with the same quantity of combustible material was heated, for the purpose of producing gas for a suspended chandelier lamp of six lights; this second essay . . . succeeded better than the first; in it Mr. Henfrey had an opportunity of rectifying errors which will unavoidably attend a first attempt, and which experiment alone will give an opportunity of correcting. With two lights of the vapor I could distinctly read small print at a distance of thirty feet, and one blaze gave considerably more light than two candles.[7]

Without denigrating the inventions of Henfrey and other early American experimenters, we realize that their innovations were not original but slight changes to British and French patents.

Henfrey's exhibits in Baltimore aroused interest but did not engender financial support, and after trying for some years to get backing in other cities, he turned to mining and other fields for his livelihood.

More than a decade later and less than a hundred miles away lived the catalysts for Baltimore's new lighting system, The Peales and their friend, Dr. Benjamin Kugler. Of Charles Willson Peale's many progeny (he had 11), two, Rembrandt and Rubens, became involved in gas lighting. Charles W., a noted portrait painter of American Revolutionary heroes, a friend and correspondent of George Washington and Thomas Jefferson, as well as an inventor, started the first museum in America. A Marylander by birth and early education, he settled in Philadelphia at the outbreak of the Revolution.

While Rembrandt, a talented painter, worked at his art, his younger brother by six years, Rubens, was acquiring the skills of taxidermy, learning botany, and assisting in managing the museum. In 1810, at the age of 26, he took charge of the museum from his father who ostensibly retired to his farm. Rubens' task was to increase the revenue of the museum to pay his father's annuity and his own salary. What better way to attract visitors than by lighting the building with the new gas![8]

To this end, in 1814, he contracted with two men from Boston who agreed to install a gas apparatus for $600.[9] It is possible that these men had worked for David Melville in Newport, Rhode Island, as the process they rigged up was like the one he used to light a room in his house. The Melville method, for which he received a patent in 1813, used coal to manufacture gas and then purify it in lime water. Rubens settled with the men after numerous complaints of offensive odors and the threats of prosecution.

When Melville received a patent, Thomas Cooper, Professor of Chemistry at the University of Pennsylvania and an authority on gas lighting, commented: "I am utterly ignorant upon what pretences Mr. Melville could take out this patent . . . ."[10] But he admitted that gas manufactured from coal is the most practical in this country despite some inconveniences.

Melville's method is stated in the patent:

> The apparatus consists of a light cast iron retort set in a furnace with a pipe leading to a pneumatic cistern filled with water, and a reservoir or gasometer, suspended in the cistern by a rope or chain, leading over pullies or chaines, to a scale containing weights; and pipes or tubes leading from the gasometer to the apartments where the lights are wanted. The apparatus being filled the mode of operation is as follows: A quantity of pit coal is placed in the retort, the door shut and luted tight. A strong heat being applied by means of a fire lighted in the furnace, hydrogenous gas, or inflamable air, will be driven out of the coal confined in the retort and forced through the water in the cistern by which it is purified, having passed through the water, it is raised up the gasometer until it is filled where it may be reserved for occasional use. By taking one or more weights off the scale the gasometer will bear with so much the greater weight upon the volume of gas contained in it, which forces it through the pipes to any distance or in any direction to the burners or apertures where the lights are wanted, and by which the flames are made to burn with more or less force at pleasure. If all the weights should be taken off the scale, and the flames still not burn with sufficient force, one or more weights may be placed on the Gasometer. Instantly on the issuing of the gas, from the aperture of the burners and coming in contact with the oxygenous gas of the atmospheric air it will take fire

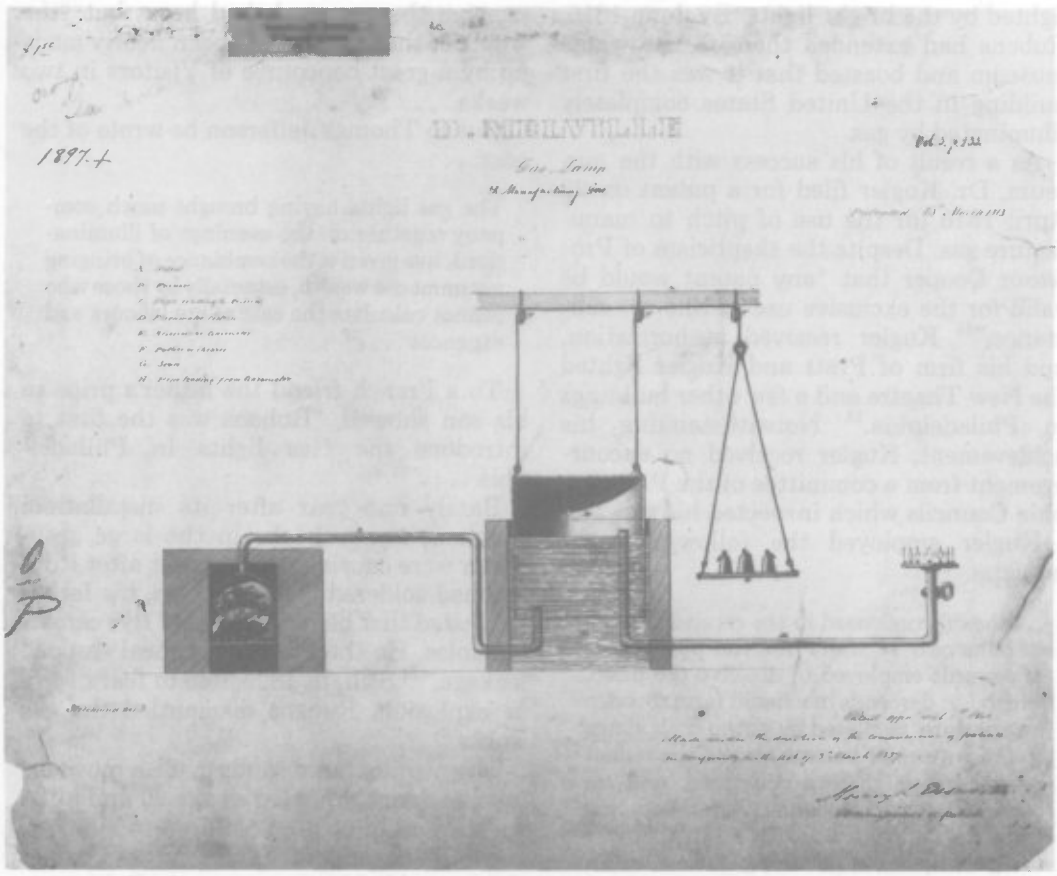

FIGURE 1.
Drawing of David Melville's 1813 gas patent. Record Group 241, National Archives.

on the application of a taper and will continue to burn with a brilliant flame without smell or smoke as long as there is any gas in the Gasometer. The burners are furnished with keys by which each flame may be regulated to give more or less light and the whole (be there ever so many) may be regulated as to the size of the flame or they may be instantaneously extinguished by a single key in the main pipe or tube.[11]

One may speculate on how different the course of events would have been had the system worked for Rubens. In retrospect, it would have succeeded, had Rubens and his workmen not introduced coal into the retorts after the gasification had started, thus releasing noxious coal gas into the air.

In his second effort, Rubens teamed up with Dr. Kugler who had lighted his own house successfully and wanted to publicize his method through the medium of the museum. Rubens furnished all the materials, and to save time he had the pipes, stopcocks, and burners all made locally rather than importing them from London. Rubens, who had a technical mind, argued that "carbureted hydrogan can easily be produced from mineral bituminous coal or some other hard substance"[12] but Kugler wanted to use tar oil, melted rosin or melted pitch. They agreed on rosin and by 1815, with the apparatus in the steeple of Independence Hall (part of the Old State House), they lighted part of the museum in the main hall, and with another gas set a part of Philosophical Hall on Fifth Street where the family lived. "We lighted up my father's mantelpiece with two argand lamps," Rubens recounted later.[13]

Members of the Philosophical Society attending a meeting at the hall were de-

lighted by the bright lights. By June 1816, Rubens had extended them to the whole museum and boasted that it was the first building in the United States completely illuminated by gas.

As a result of his success with the museum, Dr. Kugler filed for a patent on 23 April 1816 for the use of pitch to manufacture gas. Despite the skepticism of Professor Cooper that "any patent would be valid for the exclusive use of this . . . substance,"[14] Kugler received authorization, and his firm of Pratt and Kugler lighted the New Theatre and a few other buildings in Philadelphia.[15] Notwithstanding his achievement, Kugler received no encouragement from a committee of the Philadelphia Councils which inspected his process.

Kugler employed the following technique:

> . . . the oil condensed in the receiver, which is immersed in water for the purpose, is afterwards employed to dissolve the pitch, which, . . . descends in a liquid form through an aperture, regulated by a stop cock, down to the bottom or hottest part of the redhot retort, and is there decomposed, and ascends into the gasholder, after escaping from the condensing receiver. In this way the gas requires no washing in lime water, no noxious vapour is produced, no unpleasant odour arises . . . .[16]

For nearly a year the Peale family letters reflected their excitement over the museum lighting. Rubens, fascinated about the new innovation, wrote, "I am . . . much occupied with the . . . apparatus and it exceeds my most sanguine expectation."[17] He continued with experiments to find the most economic substance, but decided that rosin gave a brilliant light and required less heat to melt than pitch, and rosin and pitch mixed together gave a good light, but tar was the easiest to handle.[18]

The elder Peale waxed enthusiastic about the enterprise:

> The Lamps is (sic) made very elegant by the industry of Rubens, they are ornamented by abundance of Cut Glass—and he has not spared expence to make every part of the best Materials . . . .[19]

He could not help noticing how very expensive the gas work had been, but "the whole of the expence has been nearly made up by a great concourse of Visitors in two weeks . . . ."[20]

But to Thomas Jefferson he wrote of the cost:

> The gas lights having brought much company together on the evenings of illuminations, has given it the semblance of bringing me immense wealth, especially by those who cannot calculate the cost of my labours and expences . . . .[21]

To a French friend the father's pride in his son showed, "Rubens was the first to introduce the Gas lights in Philadelphia . . . ."[22]

Barely one year after its installation, problems arose. Leaks in the large gasometer were causing concern, but after Rubens had soldered many of them, his father suggested that he "try effects of Rye cereals for holes. He then found the meal stopped leakage."[23] Still, in 1820, due to fear of fire or explosion, Rubens dismantled the gas works.[24]

Meanwhile, Rembrandt made a move for independence. Married at age 20 and at 36 with a family of nine children to support, and still dependent on his father, he set about establishing a museum in Baltimore. In 1814 he opened the Peale Museum, and two years later, emulating his brother, he inaugurated gas lights to attract customers to the museum.

To carry out this project Rembrandt needed help from his Philadelphia connections. He learned all about the process from Rubens. The father wrote that "Rembrandt was determined to make himself perfectly master of all the best modes of producing those lights . . . ."[25] and he predicted:

> and very probably will do essential service to the public of Baltimore, for this mode of lighting Citys throughout the Streets as well as in the dwellings is immensely brilliant, and very economical.[26]

Second, to construct the small plant to be located in a building behind the museum, he pleaded for help from Rubens who sent one of the workmen from the Philadelphia museum,[27] and third, Dr. Kugler assisted with attaching the small device.

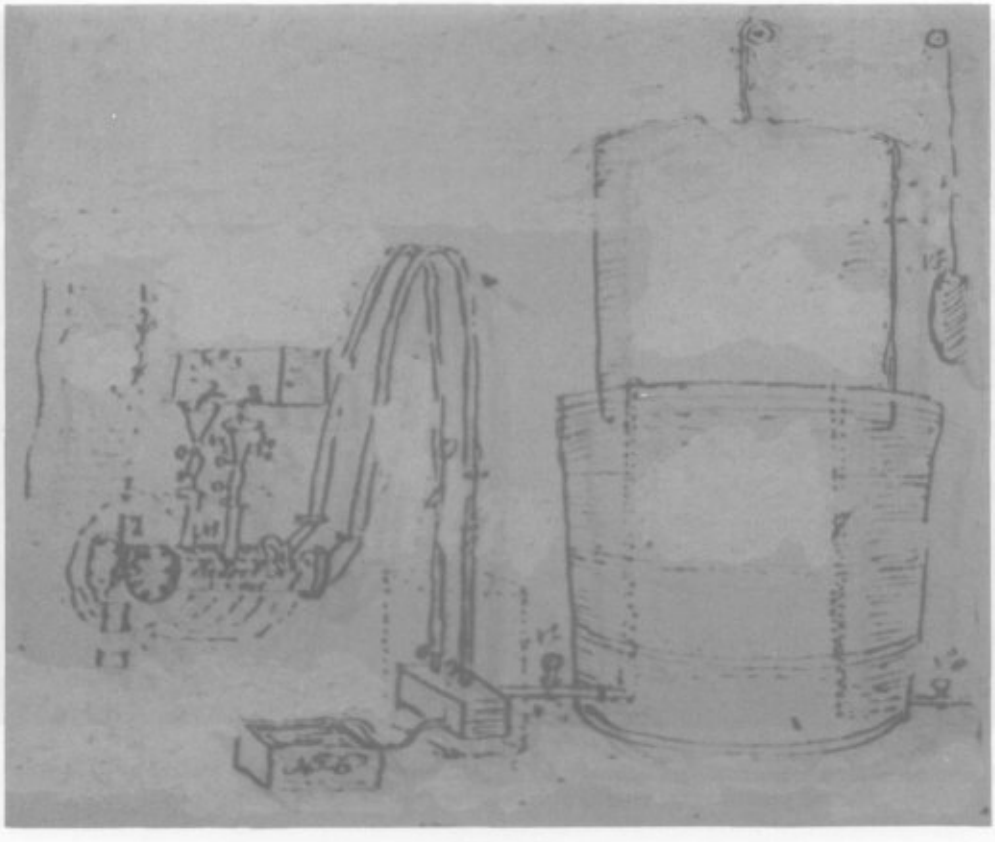

FIGURE 2.
Sketch of the Kugler gas process by Charles W. Peale in a letter to his daughter Angelica, May 5, 1816. Oil and pitch funnel into two retorts heated red hot in a furnace (not shown). The gas created rises up the pipes through a tub filled with water, and into a copper bell (gasometer or holder) sealed by the surrounding water. The oil recedes to box (No. 6 in the drawing). The pulleys and weights suggested at the top of the holder are used to tip the gas toward jets (not shown), to be lighted by a taper. (Photo courtesy of the American Philosophical Society.)

Although not in the class of P. T. Barnum, the Peales knew how to use the newspapers. On June 13, 1816 Rembrandt put a notice in the local paper:

> Gas Lights—Without Oil, Tallow, Wicks or Smoke. It is not necessary to invite attention to the gas lights by which my salon of paintings is now illuminated; those who have seen the ring beset with gems of light are sufficiently disposed to spread their reputation; the purpose of this notice is merely to say that the Museum will be illuminated every evening until the public curiosity be gratified.[28]

On July 11, 1816 another notice appeared, this time including the following excerpt:

> . . . lighting apartments . . . with superior brilliance by means of CARBURETTED HYDROGEN the pure principle of artificial light, prepared according to Dr. Kugler's patent, of which the undersigned has obtained the right for the State of Maryland—Rembrandt Peale.[29]

Rembrandt's successful exhibit of the lights in the museum, his persuasiveness, and his publicity tactics convinced eminent citizens of Baltimore that a profit could be made in lighting the city. The group included besides Rembrandt, William Gwynn, editor of the *Baltimore Gazette*, William Lorman, bank president, James Mosher, also a bank executive and a builder, and Robert Cary Long, the archi-

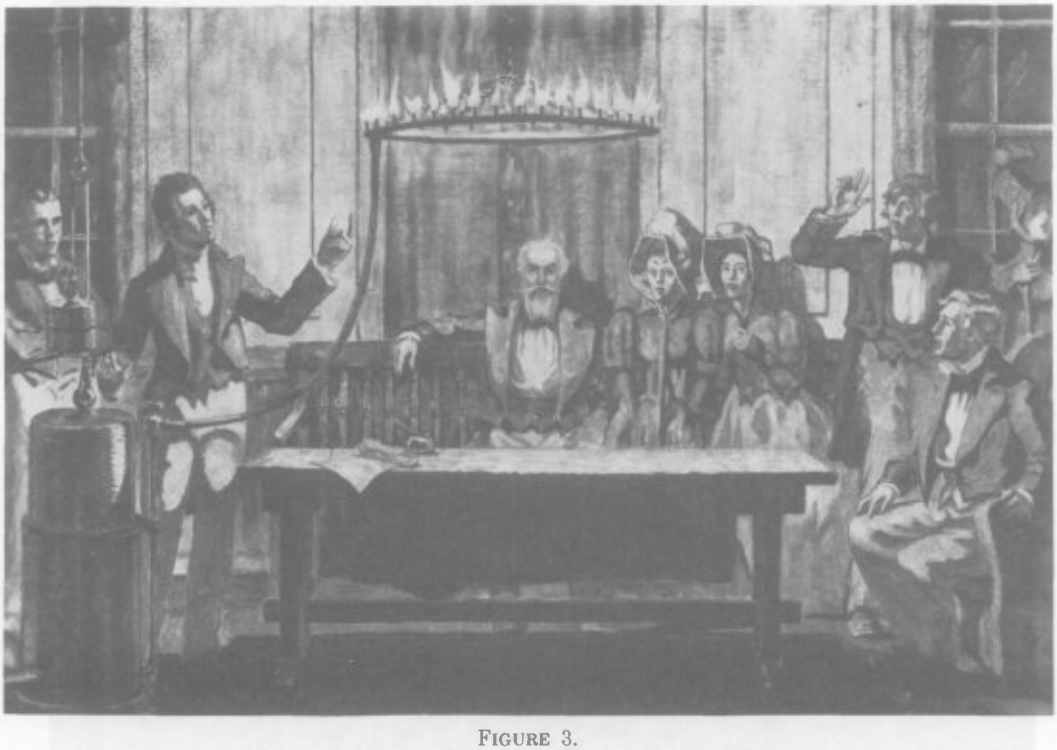

FIGURE 3.
Rembrandt Peale demonstrating gas light at the Peale Museum, Baltimore. From a mural by R. McGill Mackall painted in the early 1900s. (Courtesy Baltimore Gas & Electric Co.)

tect who designed the museum. With the approval of the General Assembly the five incorporated the Gas Light Company of Baltimore. The rights to Dr. Kugler's patent which Rembrandt held gave further impetus to the project.[30]

The difficulties which Rembrandt and the fledgling gas company experienced began almost from its inception in 1816. Under the terms of the act of incorporation, passed February 5, 1817, Rembrandt received free 100 shares at a par value of $100 per share for holding Kugler's patent. Like the four other named directors he was allocated 200 shares for purchase at par to be paid as the treasurer might determine. It probably rankled Mosher and Long that Rembrandt did not buy the shares. On the other side, Rembrandt felt frustration and anger at Long who as the architect for the museum had estimated that the building would cost $5,000 whereas the final bill amounted to $14,000. This alone put Rembrandt in serious debt. Not an auspicious beginning! Nevertheless, these three, Rembrandt, Mosher, and Long, acted as a committee to make the important decisions. Rembrandt complained that the majority, Mosher and Long, located the first gas house in a swamp area at the corner of North and Saratoga Streets. He criticized their "Unscientific attempt . . . against nature in making . . . a square cistern above ground without a bottom."[31]

Despite the differences between Rembrandt and his fellow directors, the first gasometer with a capacity of about 30,000 cubic feet started operation in 1817. The company lighted the first gas lamp on February 7, 1817 at Market and Lemon Streets (now Baltimore and Holliday Streets). On June 17, 1817 the city council passed an ordinance giving the company a contract to light the streets and to lay pipe along its streets for the purpose of supplying gas to the city.[32]

Meanwhile, back in Philadelphia, the elder Peale kept Rembrandt informed of

anything pertaining to gas. Although he had retired in 1810, Charles Willson Peale's spirit and enthusiasm had not, and his interest in the gas innovation continued unabated. But also another factor motivated him, his anxiety and desire that his 38-year-old son should succeed.

In December 1816 he passed on to Rembrandt Kugler's comment that he "had not much confidence to illuminate the city before the first of the year."[33] In May and June of 1817, while in New York, he visited a stove factory which used gas lights. He noted that the owner distilled gas from coal in a retort like the ones first tried at the museum in Philadelphia. To make enough of the vapor for an evening required eight hours, and when the coal was not completely consumed, it emitted an offensive odor, and the lime water to purify the gas smelled badly after use. In Philadelphia, he inspected a shop lighted by gas and found that the process resembled that first tried by Rubens, and that the system, like the one he saw in New York, smelled when the coal was not burned completely. The father dutifully reported the results of his trips to Rembrandt. In Baltimore, on November 1818, he accompanied his son to a gas factory where he viewed the furnaces used in making gas from coal and observed that the ovens

> seemed to me not sufficiently strong in their brick to bear much heat . . . . The coak finds purchasers here and therefore will be a cheaper means to make gas, than making it from tar . . . yet the smell is more offensive, and the small burners are injured by this gas,—not by tar.[34]

Charles W. Peale was reluctantly reaching the conclusion that Professor Cooper had earlier, that lighting a large city with Kugler's method was impractical because of

> the greater cheapness of coal-gas, the greater value of the residual products of coal, and the certainty of procuring it at all times at a . . . reasonable price . . . .[35]

Meanwhile, the gas company inched along in painfully slow fashion. By February 1818, it had only 28 lamps ablaze.[36]

Two years later, the difficulties of the business reached crisis proportions. The physical obstacles in extending the facilities and the turndown in the economy played a major part. Rembrandt, however, blamed all his troubles on Long and Mosher whose misconduct, he charged, deprived him of his right to stock by creating a debt requiring further investment by the original stockholders.[37]

Despite seemingly insurmountable problems, the gas company survived. The works originally built for the production of tar gas failed because the product proved too offensive to customers, and, therefore, was not profitable. The directors hired an engineer from England to construct new works for the use of bituminous coal, more economical in Pennsylvania at the time. This second set gave way to others which manufactured gas with greater economy. By the early 1830s, the stock was selling at 35 percent above par and paying 8 percent in dividends. By that time the company was servicing 3,000 private and 100 public lamps.[38]

After 1820, Rembrandt, no longer a viable stockholder, sought redress for the real and imagined wrongs done to him. He sued the company for use of the Kugler patent rights assigned to him and for his services as superintendent of the gas operations for one year. At the persuasion of Mr. Gwynn, a director of the company, Rembrandt, no business man, relinquished his claim for $10,000 for the patent rights in return for five shares. Later, Rembrandt cried foul:

> . . . I generously gave up my claim. How they could deny . . . that the five shares I received were only on account, I cannot conceive . . . It was in part pay compensation . . . . . signed his Gwynn paper which . . . promises to pay me a reasonable sum for . . . the Patent till their own plan should be in operation—On this nothing has been received.[39]

Rembrandt was confident that Kugler would corroborate his claim that he held the position of superintendent of the gas works for one year, but Kugler denied any knowledge of it.[40] In 1834, after years of litigation, the Court of Appeals ruled that Rembrandt was entitled to the shares of stock, but only on paying the principal and

interest. This amounted to $135 per share, or $35 above the market value of the stock. A pyrrhic victory of sorts because Rembrandt was in no position to buy the stock. The court denied Rembrandt's claim for salary as superintendent.[41]

The elder Peale's reaction to his son's gas venture recorded about 1820 is typical of a father who wanted him to succeed and was disappointed:

> The trouble which Rembrandt has brought on himself in this undertaking had nearly cost him the loss of his health, a neglect of his other business, and nearly his life—such is the folly of a man entering on a precaries (sic) [precarious] business, or a business of which he had no previous knowledge.[42]

For Rembrandt the solution to his problems was to leave Baltimore, the museum which he had neglected while involved in the gas company, and to resume his career as a painter. He importuned Rubens to assume his interest in the museum and take over as its director. This arrangement fitted in with the status of Rubens who, married in 1820 and with a baby son, was having difficulty in supporting his family after his father resumed direction of the Philadelphia museum in 1822.

Illuminating gas still intrigued Rubens. As director of the Baltimore Peale Museum from 1822 to 1824, he experimented with gas in his demonstrations. The gasholders left by Rembrandt could not be used as they were "of tin, rusted with holes."[43] So,

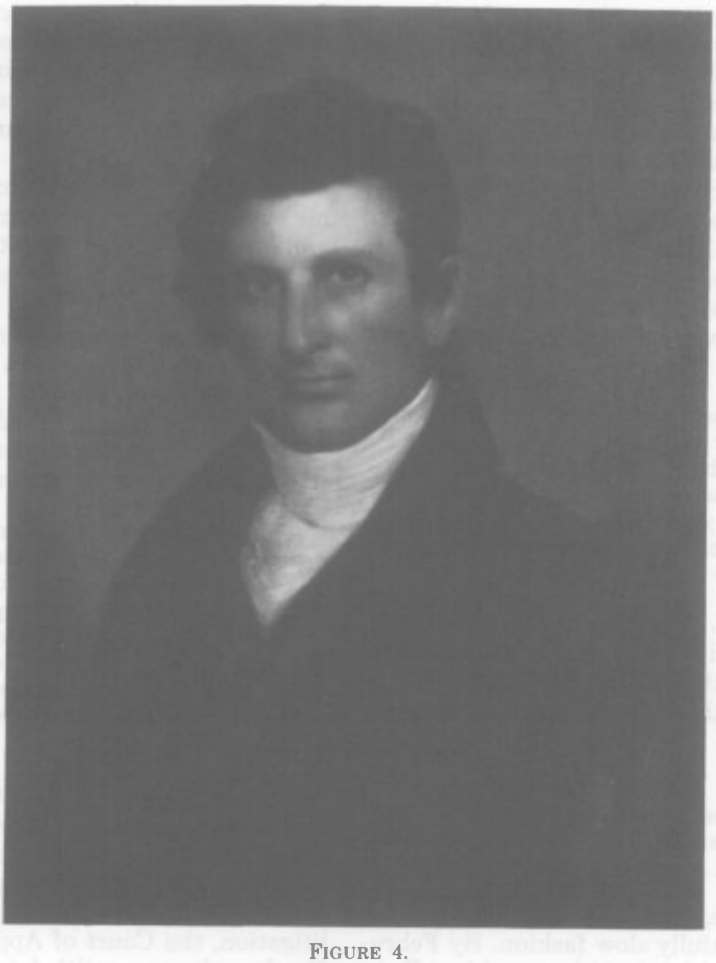

FIGURE 4.
Rembrandt Peale: self portrait.
(Courtesy Baltimore Gas & Electric Co.)

Rubens built three gasometers under one table and utilized them in his shows. But by 1824 he was lighting the building with gas supplied by the gas company.[44]

Rubens turned down offers to continue in the lighting field, choosing to stay in the field of museum management. The city fathers of Havana, Cuba urged him to light their city using its native asphaltum. He, like Professor Cooper, concluded that "for a City ... Bituminous Coal was preferable . . . ."[45]

Gas lighting came to Baltimore in 1816 because of the Peales. Although Rembrandt is rightfully credited with lighting his museum in Baltimore and organizing the first gas company in that city, the exaggerated sense of his own worth has tended to overshadow Rubens' work in gas lighting as well as the father's role and that of his friend, Benjamin Kugler.[46]

From a larger perspective, the experiments in Philadelphia and the Baltimore experience hastened the advent of gaslights in New York and Boston in the early 1820s, but it produced the opposite effect in Philadelphia whose prominent and influential citizens objected to "the filth, the stench, the nuisances . . . and the pecuniary losses" resulting from such establishments. It was not until 1836 that the community changed to gas lighting.[47]

References

I am grateful to Dr. Lillian B. Miller and her staff of the Peale Papers Collection at the National Portrait Gallery of the Smithsonian Institution for their technical assistance and courtesy in facilitating my research.

1. An excellent section on early gas lighting in England and on the Continent is contained in *A History of Technology* (Oxford: At the Clarendon Press, 1958), IV, pp. 261–265.
2. Ibid.
3. John Melish, *Travels in the United States of America* (1818), p. 139.
4. *Baltimore's One Hundred and Fiftieth Anniversary, 1730–1880* (Baltimore Gas and Electric Company, June 1966), III, No. 6, p. 12.
5. *First Records of Baltimore Town and Jones' Town, 1729–1797* (Baltimore, 1905), p. 37.
6. Melish, p. 139.
7. *Federal Gazette and Baltimore Daily Advertiser*, March 11, 1802.
8. Information on the Peale Family can be found in Edgar P. Richardson, Brooke Hindle, Lillian B. Miller, *Charles Willson Peale And His World* (New York, 1983).
9. Letters, diary, and autobiography of Charles Willson Peale are from the Charles Willson Peale Papers Microfiche Edition copy at The National Portrait Gallery, Washington, D.C. Quotations from the Peale-Seller Papers through the courtesy of the American Philosophical Society. (APS). Where typescript (TS) was used it is so noted. C. W. Peale, "Autobiography," (TS), p. 403.
10. Thomas Cooper, *Some Information Concerning Gas Lights* (Philadelphia, 1816), Preface, p. 138.
11. D. Melville's Patent, 18 March 1813 in the National Archives, Washington, D.C.
12. Rubens to Joseph Sanderson, 27 February 1861. Quotations by courtesy of the New-York Historical Society.
13. Ibid.
14. Cooper, p. 139.
15. John F. Watson, *Annals of Philadelphia* (1884), III, p. 130.
16. Cooper, p. 139.
17. Rubens to Charles Linnaeus, [21 April 1816].
18. Rubens to Sanderson, 27 February 1861.
19. C. W. Peale to daughter, Angelica, (TS), 5 May 1816.
20. Ibid.
21. C. W. Peale to Thomas Jefferson (TS), 7 July 1816.
22. C. W. Peale to L. Beauvoir, 13 October 1816.
23. C. W. Peale to Rembrandt, 27 December 1816.
24. C. W. Peale, "Autobiography."
25. C. W. Peale to Angelica, Ibid.
26. Ibid.
27. Rubens sent John Pendleton of the Philadelphia Museum gas works to Baltimore to help Rembrandt.
28. *American & Commercial Daily Advertiser*, 13 June 1816.
29. Ibid., 11 July 1816.
30. Laws of Maryland, ch. 231, passed 3 February 1817 and Thomson King, *Consolidated of Baltimore, 1816–1950. A History of Consolidated Gas Electric Light and Power Company of Baltimore* (Baltimore: December 1950), p. 24.
31. Rembrandt to C. F. Mayer, Esq., 21 July 1828.
32. Gas Light Ordinance No. 28., 17 June 1817.
33. C. W. Peale to Rembrandt, 27 December 1816.
34. C. W. Peale, "Diary," pp. 2–3.
35. Cooper, p. 139.
36. *Report to Select and Common Councils of the City of Philadelphia by Committee on Lighting City with Gas* (Philadelphia: Printed by Lydia R. Bailey, 1833), p. 5.
37. Rembrandt to C. F. Mayer, 2 June 1831.
38. Report to Select and Common Councils, ibid.
39. Rembrandt to C. F. Mayer, 21 July 1828. Quotations by courtesy of the Trustees of the Boston Public Library.
40. In 1831 Rembrandt wrote to his lawyer that Dr. Kugler knew from the beginning that he was employed as superintendent for one year.
41. C. F. Mayer to George Vaux, 12 September 1834.
42. C. W. Peale, "Autobiography," p. 403.
43. Rubens to B. F. Peale, July 1823.
44. Baltimore Museum Account Book, 1814–29, Ms.

92, Maryland Historical Society, Baltimore, Maryland.

45. Rubens to Sanderson, ibid.
46. Benjamin Kugler, sometimes in error referred to as Charles Kugler, had a scientific background. As a merchant he sold such items as annatto, a yellowish-red dyestuff. (Letter, December 1813 in files of Eleutherian Mills Historical Library). He continued to patent inventions, receiving one in 1833 for a planing machine and in 1836 for an improved furnace. (Records of the National Archives).
47. *Report to Select and Common Councils of the City of Philadelphia*, "Preface."

Eminent Chemists of Maryland

ROBERT F. GOULD

THE PEOPLE WHO FIRST PRACTICED chemistry in Maryland were usually physicians or druggists, and their primary concern was to obtain products for medicinal use. Raw materials were available in the low-grade deposits of minerals in the ancient rocks of the Piedmont area, which lies between the coastal plain and the Appalachians. These sources were later superseded by higher grade ores from the West and abroad. The chemical industries of Baltimore, however, retained their importance because of their strategic location at a railhead and on the Chesapeake Bay over which coal and ores could be brought to the plants.[1]

THE CHEMICAL INDUSTRY

Glass was probably the first chemically manufactured product in Maryland; John Frederick Amelung, who headed a colony of immigrants from Bremen, established a glass works in 1784 on the banks of the Monocacy River, just north of Frederick. Specimens of Amelung glassware are prized in historic collections today.[2]

Illuminating gas had its start in this country in Baltimore in 1802 when Benjamin Henfrey, an Englishman, discovered that he could get an "inflammable gas" by heating coal and wood. His patent for "obtaining light from fuel" was granted on April 4, 1802. His discovery was not accepted in Baltimore so he took it to Richmond, which was the first city to have the "new light." Fourteen years later a group of Baltimoreans chartered a company to furnish the city and individuals with gas light. This company became eventually the city's Consolidated Gas, Electric Light, and Power Co. At its ninety-seventh national meeting in Baltimore in 1939, the American Chemical Society dedicated a plaque to commemorate this event.[3]

The chemical industry had its start in Maryland in 1812 when Gerard Troost assisted in the formation of a factory on the banks of the Magothy River, near Baltimore, to manufacture copperas (iron sulfate). The president of the company was Richard Caton.

Troost was born in 1776 in Holland and was educated at the University of Amsterdam, M. Pharm., and Leyden, M.D. He was successively a pharmacist and a soldier before coming to Philadelphia in 1810. There he opened a laboratory where he made pharmaceuticals and served as a chemical consultant. In 1821 he became professor of mineralogy at the Philadelphia Museum, in 1822 professor of chemistry at Philadelphia College of Pharmacy, and finally professor of geology and chemistry at the University of Nashville. Troost also directed the establishment at Cape Sable, Maryland, of the first plant in the United States for producing alum. This plant soon freed the country from the need to import alum.

Epsom salt was also an early product in Maryland. About 1830 Dr. H. H. Hayden recognized that some of the white veins in the serpentine rock of the area were magnesium carbonate, and from it he began a small manufacture of Epsom salt for medicinal purposes. The veins were not very large or very pure, but they served to start the pharmaceutical industry that later drew on raw materials from all over the world. By 1831 one Baltimore manufacturer (Messrs. McKim, Sims, & Co.) was distributing 1.5 million pounds of Epsom salt per year.[4]

Chromium chemicals were early products

Presented at the Symposium on Eminent Chemists from the Northeastern States, sponsored by the Division of the History of Chemistry, 182nd National Meeting of the American Chemical Society, New York City, August 27, 1981.

of Maryland industry; the chemist who introduced them was Isaac Tyson, Jr., born in 1792, son of a Quaker grain merchant. He began his career in his father's business, but in 1816 he joined with Howard Sims, a member of the Philadelphia Academy of Natural Sciences to make paints and medicines with a laboratory on Pratt Street in Baltimore. In 1823 their plant was incorporated and by 1833 had become "Baltimore Chemical Co."[5]

Tyson was said to be one of the best "practical chemists" of his day and was chairman of the Committee on Chemistry, which reported to the Friends of Domestic Industry at a meeting in New York on October 26, 1831. This was the first comprehensive survey of chemical industries in the United States. In his address Tyson asserted that the War of 1812 gave the first impulse to chemistry in this country when domestic manufacturers were forced to supply chemicals that were formerly imported. It was the tariff act of 1824, however, that protected those manufacturers from foreign competition, placed the seal on the policy of the nation, and established the chemical industry on a firm basis. He also called upon the customs officials to keep statistical and systematic records of imports, a practice that later became routine.[6]

In 1827 Tyson was granted a patent for making copperas [iron sulfate]. He "commenced the manufacture of potash, being the first person to enter this field of enterprise in Baltimore, and, in the face of many difficulties, soon supplied the markets of the whole country."[7]

Tyson's most notable success, however, was in establishing the chromium chemicals industry in America. One day on the Tyson estate near Baltimore an English gardener showed young Isaac, who was then an apothecary's apprentice, some black stones and explained that "these are what we used to make chrome yellow out of in the old country." Isaac sensed the possibilities and set out to develop the find. He actually succeeded in collecting enough of the chromite to ship several cargoes to England, but the deposits soon ran out. This interest stimulated him to start his paint business. In 1827 while he was walking through Belair Market in Baltimore, Tyson again saw and immediately recognized the black stones. They were being used to chock a cider barrel on a farmer's 2-wheel cart. He promptly traced them to the vicinity of Jarrettsville, Maryland, where he found workable deposits.[8]

Besides exporting chromite, Tyson attempted to manufacture chrome yellow and other chrome colors, but he was unsuccessful because of technical difficulties and the highly competitive state of the market. In 1845, however, he turned to the manufacture of dichromate, for which there was a growing demand. To commence this operation he applied to Yale for a technical expert. Yale sent him William Phipps Blake, a chemistry student in the new Sheffield Scientific School. Blake may have been the first professional chemist to be employed in an industrial plant in the United States. How long he was needed at the chrome works is not definitely known, but he returned to Yale to continue his studies and graduated in 1852 with the earliest class to graduate from Sheffield. He became assistant to the professor of chemistry at New York College where he taught mineralogy. From there he went on to a career as a mineralogist, geologist, and mining engineer and received many honorary degrees. He died in 1910 in his 84th year.[9]

Tyson died on November 24, 1861, and the obituary in a Baltimore paper claimed him as "one of our oldest, wealthiest, and most energetic citizens."[10] He left the company, Baltimore Chrome Works, in the care of two of his sons, Jesse and James Wood, as trustees of the estate with instructions that Jesse, who had been in partnership with him, was to be in charge of the plant and James W. was to be in charge of the mines. His other two sons, Richard W. and Isaac III, along with his daughter, Hannah, were left money bequests only.[11] The mines were extensive works, the largest of which had a shaft 300 feet deep; another was worked through an incline nearly 1,000 feet long.[12]

In 1902 Baltimore Chrome Works was acquired by Kalion Chemical Co. of Philadelphia which in 1906 was acquired by

Henry Bower Chemical and Manufacturing Co. In 1908 Bower was merged with Mutual Chemical Co., and in 1954 Mutual was acquired by Allied Chemical & Dye Co.[13]

Fertilizers

The fertilizer industry in this country started in Baltimore. As the land devoted to intensive cultivation of tobacco wore out, the demands for means to revitalize it grew, and fertilizers provided the answer. Wood ashes and lime were the first fertilizers, but the Ellicott family of Maryland brought in gypsum from Nova Scotia which increased production by two thirds. Next was ground bone, introduced by Junius Brutus Booth, father of Edwin.[14]

Still better was Peruvian guano, which was introduced in 1824; it became available commercially in 1832 through the Port of Baltimore. Meanwhile, William Davison was following the experiments with bone and manure phosphate by Justus Liebig in Germany and John Bennett Lawes in England. Davison was a Scotch-Irish Presbyterian who came to this country in 1826 because his parents objected to the girl he wanted to marry. He was a graduate of the University of Belfast where he had studied chemistry. He settled in Baltimore and started to make drugs and chemicals. In 1832 in company with John Kittlewell he erected the first sulfuric acid chamber works in the state and started the bone phosphate industry in Baltimore. Later he was the first to substitute South Carolina rock for oyster shells and bones in making acid phosphate. Davison's plant was the first of many that made Baltimore's fertilizer business the largest in the world.[15]

Davison's partner, Kittlewell, was a naval officer of the Port of Baltimore. In 1857 Kittlewell joined with Gustavus Ober to build a plant adjacent to Davison & Kittlewell's sulfuric acid plant to make the first complete, mixed fertilizer. They made "manipulated guano." Ober was born in Montgomery County, Maryland, in 1819. He graduated in pharmacy, moved to Baltimore, and in 1840 opened a wholesale drug business in downtown Baltimore. He was a southern sympathizer, and under the Union guns atop Federal Hill he was forced to suspend operations during the Civil War. Kittlewell died during the war; after the war Ober's sons reorganized the business, which prospered until it merged with Davison Chemical Co.[16]

Davison also started the Maryland White Lead Works and the Chemical Co. of Canton. He retired in 1873 and died on October 19, 1881 at age 71. One of his seven sons, Calvin T. Davison, formed Davison Chemical Co. that operated two sulfuric acid plants; in 1914 it began making acid phosphate, and between World Wars I and II it acquired phosphate rock properties in Florida and purchased several other fertilizer plants. During World War I it acquired rights to silica gel patents, and Walter A. Patrick assisted the company to get into the manufacture of silica gel, which came into large use as a drying agent and as a fluid catalyst for petroleum refining. The company was acquired in 1954 by W. R. Grace, which built a research facility in Clarksville between Baltimore and Washington.[17]

Analysts and Consultants

Gustav A. Liebig was an Austrian chemist who settled in Baltimore and made a name for himself in the city's fertilizer business. Liebig was born in Hayden, Austria, on August 18, 1824, son of Franz Liebig, an artist serving the courts of Saxony and Bavaria. Gustav studied pharmacy with Baron Brendt in Prague and entered Carolinian University, the oldest in Germany, in 1845, receiving the Ph.D. in 1849. He became a post-doctoral assistant to Professor Joseph Bedtenbachen and followed him to Vienna. He came to New York in 1856 and two years later arrived in Baltimore where he set up an analytical laboratory and became recognized as one of the city's outstanding analysts. By 1876 he had formed the Patapsco Guano Co., and in 1881 he formed the firm of Liebig & Gibbonian to make "vulcanite guano," said to have been made without the use of sulfuric acid. He published widely on fertilizers and was a charter member of the American Chemical Society, formed in 1876 in New York. He died in Catonsville, Maryland on December 16, 1893.[18]

Another Maryland charter member of the American Chemical Society was Wil-

liam Simon, industrial chemist and teacher. He was born in Eberstadt, Germany, on February 20, 1844 and received his Ph.D. in chemistry at Giessen, 1868. He served as demonstrator at Giessen for two years and in 1870 was offered the position of leading chemist in the factory of Baltimore Chrome Works. He accepted, but the Franco–Prussian War had just broken out, and he volunteered for the Sanitary Corps. He took part in the battles around Metz, received a medal of honor, and asked for his discharge after the battle of Sedan. This was in late 1870, and he went straight to Baltimore to start work. He continued with the Baltimore Chrome Works until 1907 where he developed the conversion of chromite into alkali chromates on a large scale.

There was at that time no teaching laboratory of analytical chemistry in Baltimore, and at the request of prominent druggists and physicians, Simon directed a course in analytical chemistry. Its success induced the Maryland College of Pharmacy in 1871 to make analytical chemistry an obligatory branch of study. The college arranged a laboratory and appointed Simon professor of analytical chemistry. The next year he was also made professor of general chemistry, in which position he served until 1902. He was lecturer in chemistry at the College of Physicians and Surgeons of Baltimore for a while and at Baltimore College of Dental Surgery, 1888 to 1916. His "Manual of Chemistry" passed through 13 editions between 1884 and 1927. Simon lived in Baltimore for a few years, then in Catonsville for the rest of his life. He died at his summer home in Eagles Mere, Pennsylvania, on July 19, 1916.[19]

In 1848 the office of state agricultural chemist was created in Maryland, the first in the nation. James John Higgins, M.D., was appointed to the post. The act required him to deliver "one public lecture in each election district and a course of lectures at each county town and some central place in Baltimore County." He made his second report to the Maryland House of Delegates in 1852. His duties brought him into close contact with agricultural problems, and Higgins became interested in and developed a quite superior fertilizer formula. Rather than capitalize on his success, however, Higgins promptly made public his discovery for the benefit of the people of the state. Still another claim to distinction by Higgins was that he was the first to introduce comparative pricing of fertilizers. In a report in 1854 he said, "about 200,000 tons of guano were imported into the U.S., and the reduction in price to $50 will probably mean 250,000 tons will be imported in 1855."[20]

Philip Thomas Tyson was born in Baltimore on June 23, 1799, son of Isaac and grandson of Elisha Tyson. He was educated in Baltimore and farmed in Harford County, Maryland, where he tested Justus Liebig's views on fertilizers and pioneered the use of native marls in place of imported fertilizers. In 1849 he visited California at the request of the War Department for "the sole purpose of investigating its geologic peculiarities." His report, "Geology and Industrial Resources of California," was published in Baltimore and reprinted as Senate Executive Document No. 47, 31st Session, 1850, and reviewed in *North American Review*. It had chapters on geology, gold regions, quicksilver mines, vegetable products, climate, agriculture, and public lands.[21]

In 1856 Tyson was appointed state agricultural chemist, in which post he served until 1860. He made two biennial reports that were published by the Maryland House of Delegates. He had little expense money for travel, but he got geological data by walking along railroad tracks, which were still being laid through Maryland in 1860. He examined strata exposed by cuts through hills and mountains. The Baltimore & Ohio Railroad gave him a free pass, and boatmen took him up rivers of Chesapeake Bay so he could examine strata. He had been doing this sort of thing for some time. In 1830 he published a report on the locations of minerals in Baltimore and Harford Counties. In 1837 he published a descriptive catalog of the principal minerals of the state of Maryland. He discovered the 14–foot vein of bituminous coal in the George's Creek region of Western Maryland, the largest coal deposit known at that time.[22]

In 1855 Tyson headed a committee on natural history that was established by the Maryland Historical Society. From 1819 to 1844 several efforts were made to establish a Maryland Academy of Science, all of which lasted a few years but then foundered. In 1863 another academy was started with Tyson as president. Among its objects were "to promote scientific research and to collect, preserve, and diffuse information relative to the sciences, especially those which are connected with the natural history of Maryland." In 1867 it was incorporated under its present title of Maryland Academy of Sciences. Tyson died in Baltimore on December 16, 1877[23]

William Bose Dobbin Penniman was born in Baltimore on March 21, 1867, and graduated from Johns Hopkins University, B.S. 1887. He took a position as chemist in the testing laboratory in the Mount Clare shops of the Baltimore & Ohio Railroad and advanced to the head of the laboratory. In 1893 he resigned and joined Arthur Lee Browne to form the firm of Penniman & Browne, a consulting and analytical laboratory. The firm conducted researches in many fields of chemistry and metallurgy, particularly petroleum, fermentation, iron and steel, alloys, cotton, and paints. Their oustanding work was in petroleum in which they devised two systems of distillation and cracking. During World War I Penniman was head of the War Industries Board which determined which chemicals should be imported and which exported. When his partner died in 1933, Penniman became sole owner of the firm. Soon after the firm was formed, Penniman became a member of the faculty of Baltimore Medical College where he taught chemistry for many years. His interest in the college led him to study medicine there, and he received the M.D. degree in 1899. He also received the Ph.D. degree from Loyola College of Baltimore in 1898. He aided in organizing the State Board of Health of Maryland and was a well-known toxicologist and an expert in poisons, their effects, and antidotes. He lived in Howard County, Maryland, and died on December 17, 1938.[24]

Arthur Lee Browne was born in Baltimore County, Maryland, on May 10, 1867, and went to Johns Hopkins University where his father was on the faculty. Arthur graduated, A.B. 1888, and took graduate work in chemistry under Remsen. Later he studied medicine at the University of Maryland, M.D. 1906. He was professor of chemistry and toxicology at Baltimore Medical College from 1907 to 1912. Browne's first work between college and his partnership with Penniman was as chemist for American Leather Co. As an analytical chemist with the partnership he supervised a government survey and collection of statistics on the water supply of Maryland. He also assisted in developing commercial alloys and various methods of regulating boiler water and water plants. He died at his home in Anne Arundel County, Maryland, on June 17, 1933.[25]

Charles Philip Van Gundy was born in Springfield, Illinois, on January 5, 1867, and graduated from the University of Illinois, B.S. 1888. He was an analytical chemist for the Baltimore & Ohio Railroad, 1888–90, and then a chemist for the Laughlin and Co. steel plant in Pittsburgh, Pennsylvania until 1892. He returned to the B&O to succeed Penniman as chief chemist of the Mount Clare shops. In 1920 he became water engineer, and from 1926 to retirement he was an engineer of tests. At the eighth national meeting of the American Chemical Society in 1893 in Baltimore, when the entire meeting was held in the chemistry lecture room at Johns Hopkins University, Van Gundy was chairman of the local committee. He died in Baltimore on November 21, 1958. At the time of his death he had a record for the longest continuous membership in the American Chemical Society, which he had joined in 1892.[26]

The Porters

John Jermain Porter II was born in Washington, D.C., on June 14, 1880, the son of Jermain G. Porter, an astronomer with the U.S. Coast and Geodetic Survey. John attended the University of Cincinnati, where his father was then professor. He was studying chemistry under Thomas H. Norton, but he did not graduate with his class in 1901. He left at the end of his third year along with many other students

in sympathy with professors who were dismissed by the new university president. Porter's father was only partly under the president's authority and was not dismissed, but Norton was. However, when Porter returned to the university as an assistant professor in 1907, he took courses for the necessary additional credits while he was teaching to earn his B.S. degree in 1908.[27]

Upon leaving the university, Porter went west with a classmate and worked for a short time in an assay office in Denver. Then he went to the Midwest to take a job as assistant chemist in a packinghouse laboratory. Within a year, however, he was offered a job as a chemist for the Allegheny Ore & Iron Co. and went to the Shenandoah, Virginia, plant. In 1906 he was employed as chemist by Charles Catlett, consulting geologist of Staunton, Virginia, and it was here that Porter first came into contact with the cement industry and learned something of the methods of consulting engineers.[28]

The depression of 1907 slackened the consulting business, and Porter had to look elsewhere. He had three offers: 1) from his old chemistry professor, Thomas Evans, to go to the University of Cincinnati as assistant professor, 2) as assistant superintendent of a blast furnace in Cleveland, and 3) to become chemist for a steel foundry in Cincinnati. He chose the first in order to indulge his interest in consulting. Catlett agreed to recommend him for consulting work and was able, directly or indirectly, to throw considerable work his way. During the next five years he did a great deal of technical writing, carried out a good many investigations for clients involving both laboratory and field work, and gained much valuable experience.[29]

As a teacher he didn't feel he was much of a success. He didn't like the academic atmosphere or the head of his department. Perhaps it would have been different, said Porter, if Professor Evans had lived, but he died suddenly about the time Porter got to Cincinnati. For the first year Porter had to take over Evans' classes in technical chemistry in addition to the work he had been expected to carry and the class work he took himself to get his degree. "If Evans had lived he might have made a teacher out of me," wrote Porter some years later. As it was it became intolerable to him, and he was glad to take an opportunity to leave in 1912.

Early in 1912 the U.S. Bureau of Mines planned a study of blast furnace operations. Catlett heard about it and recommended Porter for the assignment, citing Porter's blast furnace experience and the innovative series of efficiency records for blast furnace operations that Porter had worked out and which Catlett termed potentially epoch-making. By the time the recommendation was received, however, the position had been filled. Later that year, Catlett found another assignment for Porter; he took him back into his consulting business.[30]

In 1906–07 Catlett had promoted a cement plant with the help of some Baltimore capitalists. In his earlier tenure with Catlett, Porter had helped him in the field work and had done all of the laboratory work on the cement plant. As a result, the Maryland Portland Cement Co. was formed and built a plant near Hagerstown. Later this became Security Lime and Cement Co. By 1912 the company was verging on bankruptcy. The industry was depressed, operating costs were high, and working capital had become exhausted. In desperation the directors turned to Catlett to help them out of their troubles. Catlett assigned Porter to analyze the operation.

On the basis of Porter's report, Catlett agreed to take the presidency for one year, and Porter went with him as his assistant. Together, they whipped the plant into shape and ended the year with a small profit. "From there on," Porter wrote, "it was comparatively easy." In 1914 he became vice president and general manager of the company.

In 1916 large credits of potash were found in the company's rock deposits, and the company became a potash supplier. During World War I Porter was appointed a "dollar-a-year" man as consulting metallurgist to the Bureau of Mines and to the War Industries Board concerned with potash production.

In 1925 Security was merged into North

American Cement Corp., of which Porter became president in 1932, chairman of the board in 1944, and honorary chairman in 1949. He was prominent in the Portland cement industry, was a trustee of the industry's trade association, and was active on a number of its committees.

When he moved to Hagerstown, John Porter decided to move on his idea of a chemical company to package and market proprietary products such as mothballs. His brother, Harold Mitchell Porter, born in Cincinnati on June 29, 1893, had finished his third year in chemistry at the University of Cincinnati, and John persuaded him to leave school and move to Hagerstown to manage the business. They started it in 1914 as Porter Chemical Co. Harold was president and operating head of the company; John was vice president, acting in the capacity of consultant.[31]

About a year after the company was started John and Harold, both of whom had experimented with chemistry as boys, jointly got the idea that there were a number of chemical experiments producing vivid color changes and other visual phenomena that could be performed with chemicals that were relatively harmless and that required only a minimum of heat. So was born, in 1916–17, the first "chemical magic" set.[32]

John did most of the research on the experiments, and Harold wrote the original experiment manuals, recalls Harold's son, John J., who was an early employee of the company and managed it during the 1960s. Harold and John's wife, Edith, did the actual manufacturing during the first couple of years. Harold was also the first salesman for the company, and one of the earliest customers was Woodward & Lothrop in Washington, D.C. John and Edith Porter kept the company going during late 1917 and 1918 while Harold served in the U.S. Army during World War I.[33]

In the beginning there were only two "chemical magic" sets, one selling for about seventy-five cents and the other for a dollar. By the early 1920s Porter Chemical Co. was making a line of chemistry sets in six different sizes. These retailed from fifty cents to twenty-five dollars. Eventually the company could claim to be the largest single user of glass test tubes in the world.

So successful were the "Chemcraft" chemistry sets—about one thousand were sold in their first year—that A. C. Gilbert, the toy manufacturer of New Haven, copied the idea and came out with parallel chemistry sets in 1922. Between the two, many future chemists had their first fascination with chemistry.

In the mid–1930s, Harold Porter, by now operating the company on his own, began manufacturing microscope sets. Later, other types of science sets, including biology, general science, electrical construction, mineralogy, atomic energy, and crime detection were added. As the war years closed down supplies of certain metals and other critical goods, the chemistry sets were altered. Many other products were manufactured during this period, "unscientific toys to be sure, but enough to keep the company going." "The most prosperous time for chemistry set manufacturers was the period from the end of World War II through the early 1960s," says Harold's son, John J. III. From its inception to 1961, Porter manufactured probably well over one million chemistry sets of all sizes.

Porter Chemical Co. was acquired by Lionel Toy Corp. in 1961 but operated as a wholly–owned subsidiary. After several other mergers by 1969, both Porter and A. C. Gilbert had become divisions of Gabriel Industries, a conglomerate dealing mostly in toys and recreational equipment.[34]

John and Harold Porter were active in civic affairs; both served as president of the Hagerstown Chamber of Commerce. John was an officer of Nicodemus National Bank, and both were directors of the bank and trustees of the Washington County Free Library.[35]

John died on March 9, 1956 at Nakomis, Florida. Harold continued with the company and later was a director of Lionel. He died on March 3, 1963 at Hagerstown.[36]

Teachers

John P. Revere, the youngest son of Paul Revere, the Boston silversmith and celebrated night rider of Revolutionary War fame, lived in Baltimore between 1816 and 1829. He was born in Boston on March 17,

1787, graduated from Harvard with honors in 1807, and went to Scotland where he received the M.D. degree at Edinburgh in 1811. He returned to practice medicine in Boston, but he had bronchitis, and he moved to Richmond, Virginia, to seek a milder climate. His health improved, and he soon moved to Baltimore. He began practice but devoted his leisure to the study of chemistry. He was appointed professor of chemistry at the Maryland Institute for Promoting Mechanical Arts, which was founded in 1825. In 1828 he published a paper "On the Crude Sodas of Commerce" in the *American Journal of Science*. Another of his interests was to prevent the rusting of iron in sea water so it could be used on ships' bottoms in place of copper. He communicated the results of this study to the Lyceum of National History of New York at a meeting on March 17, 1829. In this lecture he recognized the galvanic effect on iron in the presence of copper and showed uncorroded spikes that had been exposed to sea water. That same year he left for Europe in the hope of finding support for his plan for corrosion prevention. He failed in that hope, but he used the opportunity to extend his medical studies during his two-year stay in Europe. In 1831 Revere was appointed to the faculty of Jefferson Medical College in Philadelphia and in 1841 to the medical faculty of the University of the City of New York. He died in New York City on April 29, 1847.[37]

Lewis Henry Steiner was born in Frederick, Maryland, on May 4, 1827 and graduated from Marshall College in Mercersburg, Pennsylvania, A.B. 1846, and from the University of Pennsylvania Medical School, M.D. 1849. He practiced medicine in Frederick, 1849–52, then in Baltimore until the Civil War. During the war he served as chief inspector in the U.S. Sanitary Commission, which played the same role in the Civil War as the Red Cross did in later wars.[38]

Steiner was attracted to chemistry as a student, and at Pennsylvania he attended lectures by Robert Hare and James B. Rogers, leading chemists of the day. Soon after graduation he lectured on chemistry at a medical preparatory school in Baltimore. In 1853 Columbian College in Washington, D.C., which became a university in 1873 and was renamed George Washington University in 1904, elected him professor of chemistry and natural history in the college and of chemistry and pharmacy in the medical school. In 1855 he and Daniel Breed, Ph.D., a patent examiner who had studied under Liebig, translated Heinrich Will's *Outline of Chemical Analysis* and had it published as a text for his classes.

Steiner taught at Columbian College until 1856. St. James College in Hagerstown hired him to lecture on chemistry and physics, 1854–59, and the Maryland College of Pharmacy elected him professor of chemistry, 1856–61 and 1864–65. After the 1860s Steiner's other interests crowded out chemistry. He served on Frederick's school board for several years, was political editor of the Frederick *Examiner*, sat in the Maryland State Senate, 1871, 1875, and 1879, and was a delegate to the Republican convention of 1876 that nominated Rutherford B. Hayes for the presidency. He was active in religious affairs, compiling a hymnal, a catechism, and an order of worship. He wrote stories for children. When Enoch Pratt built the library that bears his name in Baltimore in 1886, he engaged Steiner as librarian. Steiner died of apoplexy in his home in Baltimore on February 18, 1892.

REMSEN

The most influential teacher in Maryland, and perhaps of the entire country in his time, was Ira Remsen, who was born in New York City on February 10, 1846. Remsen entered the Free Academy in New York [later City College] at age 14. Although he did not finish, he was granted an A.B. degree in 1892 with the class of 1865. He graduated from the College of Physicians and Surgeons, New York City, M.D. 1867, and won a prize for his senior thesis, "The Fatty Degeneration of the Liver."[39]

Remsen was apprenticed briefly to a physician in New York City but soon turned to chemistry. He studied in Munich with Jacob Volhard, learning laboratory practice of analytical chemistry from him while attending Justus Liebig's lectures on organic and inorganic chemistry. After a year Remsen moved to Göttingen to work in Fried-

rich Wöhler's laboratories under Rudolph Fittig. In 1870 he received his Ph.D.; Fittig was called to Tübingen, and Remsen went with him as his assistant, staying until 1872.

When he got back to America, Remsen completed a translation of Wöhler's *Outlines of Organic Chemistry*, which was published the next year, and in the fall of 1872 he accepted a position as professor of physics and chemistry at Williams College. The atmosphere there was quite indifferent to chemistry as he knew it, but he pursued his researches and began to develop the simple and lucid lecture style for which he became famous. This style came through in the first of a long series of popular textbooks, *The Principles of Theoretical Chemistry.*

In 1876 Daniel Coit Gilman, just appointed president of the new Johns Hopkins University in Baltimore, was making every effort to assemble a stellar faculty. For the combined chair of chemistry and physics, he wanted Wolcott Gibbs of Harvard, then 54 and considered one of the top ranking American chemists. Gibbs declined so Gilman decided to separate the two fields and offered the chemistry chair to Remsen, who was only 29 but with training similar to that of Gibbs. The avowed purpose of the founders of Johns Hopkins was to provide a European-type university in America that would make it unnecessary for students here to travel to Europe to obtain a first class education, and in this they succeeded very well. It wasn't long before Hopkins, along with Harvard, was one of the top universities in America for graduates in many fields. During the early part of this century it served as the model for other schools, particularly in the sciences at the many new state universities.[40]

At Hopkins Remsen helped to build a university on the continental model—a place for discovery rather than just for transmission of knowledge. The initial enrollment was about half graduate and half undergraduate. Graduate instruction was of a type new to America—research work, a minimum of advanced lectures, and departmental "journal meetings" to keep everyone up-to-date in world chemical literature, which was still possible in the 1870s. Remsen readily admitted that his system was German in origin, but he applied it with such rare skill in teaching and directing students that by the turn of the century more than half the first-ranking academic chemists in the country had been trained at Johns Hopkins.

When the Rockefeller-endowed University of Chicago was established in the early nineties, Remsen was offered the chair of chemistry. The Hopkins faculty gasped, fearing it would lose a stellar attraction. Remsen declined, but it was rumored that he did so with the understanding that he would succeed Gilman when the president stepped down. Remsen had substituted for Gilman as acting president while Gilman was in Europe in 1889–90 but did not appear to relish the job. He was maintaining his full academic load at the same time, however. He did succeed to the presidency for two years, 1910–12. Women were first admitted in those years, and the university acquired its present Homewood location in North Baltimore.[41]

In 1913 Remsen, then 67 years old, returned to the chemistry department to teach history of chemistry and edit later editions of his many famous textbooks. Including the one mentioned above, there were seven, with a total of 28 editions and 15 translations. Distribution of these texts has been estimated at half a million copies. Their enormous popularity was well earned by their sound theory, logical organization, and extreme simplicity of style.

Remsen's research included oxidation of aromatic side chains and the protective effect of ortho-substituents, sulfonphthaleins, the "double halides" of transition and heavy metals with alkali halides, and directive and kinetic effects of aromatic substituents. Although his research, together with that of his immediate graduate students, produced over 170 papers and always tried to elucidate principles rather than just to report compounds, the consensus is that it was relatively minor. His fame rests more on his brilliance as a teacher, text writer, builder of a university, and inspirer of students than on his own direct efforts in chemistry.

Remsen served as president of the Amer-

ican Chemical Society, the American Association for the Advancement of Science, and National Academy of Sciences, and the Society of Chemical Industry. He was the first recipient of the ACS's Priestley Medal. He married Elizabeth H. Mallory of New York City, and they had two children: Ira Mallory Remsen, an artist and playwright, and Charles Mallory Remsen, a surgeon who practiced in New York. Remsen died of a cerebral hemorrhage in Carmel, California, on March 4, 1927, and his ashes are behind a plaque on a stairwell of Remsen Hall on the Homewood campus.

Between 1876 and 1925, 304 Ph.D.'s in chemistry were granted at Johns Hopkins, 115 of them directly under Remsen.[42] The research they completed was usually published in Remsen's own *American Chemical Journal*, which he founded and edited from 1879 to 1914 when it was absorbed by the *Journal of the American Chemical Society*.

Remsen's first assistant in his chemistry department at Johns Hopkins was Harmon Northrop Morse, who was appointed associate professor in 1876. Morse was born in Cambridge, Vermont, on October 15, 1848, graduated from Amherst College, A.B. 1873, and from Göttingen, Ph.D. 1875. He was assistant in chemistry at Amherst for a year before going to Hopkins. He became professor of analytical chemistry and adjutant director of the chemical laboratories in 1891, later also professor of inorganic chemistry. He supervised the research of 47 graduate students from 1884 to 1917. His principal research interest was osmotic pressure. He died on September 8, 1920.[43]

SACCHARINE

One of Remsen's first post-doctoral fellows was Constantin Fahlberg, who was born in Tambow, Russia, on December 22, 1850, and received his Ph.D. in 1873 at Leipzig. He worked as a chemist in Germany, New York, London, and British Guiana, and went to Hopkins as a fellow in 1878. Remsen assigned to him one third of a problem on the oxidation of toluenesulfamide; Fahlberg drew the ortho derivative while others drew the meta and the para. Among the products Fahlberg discovered a sweet substance that he and Remsen announced in *Chemische Berichte* in March 1879 and in *American Chemical Journal* in February 1880; they referred to it as benzoic sulfinide or anhydrosulfaminebenzoic acid.[44]

Fahlberg immediately started working on a process for commercial production of the compound, which he named "saccharine." He left Baltimore to work at Gray's Ferry Chemical Works in Philadelphia, and then he moved to New York City. He applied for a patent on August 7, 1884, and it was issued on June 2, 1885 with half interest assigned to Adolph List of Leipzig, Germany, his business partner. This effectively froze Remsen out of any benefit from the discovery. Fahlberg had hoped to build a saccharine plant in America, but the high cost of production and the high tariff on raw materials caused him to build his plant in Germany.[45]

After he had completed his Ph.D. with Remsen, Alfred Dohme went abroad for study in Germany. He took with him letters from Remsen to the great German chemists whose opinions Remsen wished to sound out on the saccharine problem. Dohme saw Kekulé at Bonn, Adolph Bayer at Munich, Victor Meyer at Heidelberg, Wilhelm Ostwald at Leipzig, and Emil Fischer at Wurzburg. All felt that Remsen should claim the patent rights to saccharine and advised him to sue Fahlberg because the original problem was Remsen's. In spite of this neither Dohme nor Merck and Co. could ever persuade Remsen to enter suit. His reply was that he would never soil his hands with industry and business.[46]

Remsen's prime interest was scientific discovery, and he would have been impatient with the details of working out a process for commercial production. Nevertheless, he was deeply hurt by Fahlberg's repeated claims, in speeches and in print, of sole discovery of saccharine. "That Fahlberg did not enjoy a high reputation for integrity in his native [sic] land," writes Remsen's biographer, "is suggested by the fact that a German professor with whom Fahlberg had formerly been associated sent a cable to Morse on learning of Fahlberg's matriculation at Johns Hopkins, 'I warn you of Fahlberg.'" In a letter to his old friend, Sir William Ramsay, Remsen as-

serted, "Fahlberg is a scoundrel." True as this evaluation may have been, Fahlberg's feat of taking an inefficient laboratory synthesis and, all by himself, developing alternative, more efficient routes to a commercial process has been termed nothing less than remarkable.[47]

In a conversation with a student just before his resignation from Hopkins, Remsen said that so far as he knew, Fahlberg was his only enemy. "I did not want his money," said Remsen, "but I feel that I ought to have received a little credit for the discovery." Fahlberg became wealthy and lived for many years in a castle on the Rhine. He died in Nassau, Germany, on August 5, 1910.[48]

Hopkins Staffers

Lyman Beecher Hall was born in New Bedford, Massachusetts, January 16, 1852, graduated from Amherst, A.B. 1873, and from Göttingen, Ph.D. 1875. He returned to the States, and Remsen invited him to Hopkins where he published a series of papers on his research on mesitylene derivatives. In 1879 he was appointed instructor of chemistry at Hopkins, but the next year he moved to Haverford College where he taught with distinction until he retired in 1917. He died on January 20, 1935 in Madison, Wisconsin, where his son was on the chemistry faculty at the university.[49]

In 1885 Remsen took on the staff an American chemist who had been his first instructor in Germany—Edward Renouf. Renouf was born in Lowville, New York, on September 4, 1846, and was educated in Boston grammar and Latin schools. He studied at Heidelberg and Jena and was an assistant in Volhard's laboratory at Munich where he taught Remsen. He received the Ph.D. at Freiberg, 1880, and Remsen appointed him assistant in chemistry at Hopkins where he organized the undergraduate work. He was attuned to the German orientation of the department, and students found his methods in qualitative analysis "distractingly new and searching." He won appointment to associate professor in 1886, professor in 1892, and he retired in 1911.[50]

Renouf had been a member of a German student corps, and he bore scars on his face. As a student he was a mountain climber; in one fall he broke an arm and a leg and was forced to lie unattended for hours. As a result one leg was short, and he walked with a limp. He had one accomplishment, however, that never failed to astonish his students. This was in the days when it was not uncommon for a macho man to roll his own cigarettes. Renouf rolled his own, but with one hand—in his pocket. His hand would dip into his jacket pocket, fumble about, and suddenly emerge with a fully rolled cigarette, ready to be lighted. He claimed he learned the trick during his wait on the mountain after the fall to while away the time waiting for rescue. Renouf died at his home in Bermuda in November 1934.[51]

Harry Clary Jones was born in New London, Maryland, on November 11, 1865, and graduated from Hopkins, A.B. 1889, Ph.D. 1892. After post–doctoral study at Leipzig, Amsterdam, and Stockholm he returned to Johns Hopkins as instructor in physical chemistry, 1895, became associate, 1898, associate professor, 1900, and professor, 1904. He supervised the research of 38 Ph.D. candidates. He wrote or translated 23 books, including "Freezing Point, Boiling Point, and Conductivity Methods" (1897), "The Modern Theory of Solutions" (1898), Biltz's "Practical Methods for Determining Molecular Weights" (1899), "The Theory of Electrolytic Dissociation" (1900), "Outlines of Electrochemistry" (1902), "Elements of Physical Chemistry" (1902), the latter translated into Russian (1911) and Italian (1912). He was associate editor of *Journal de Chemie Physique*, *Journal of the Franklin Institute*, and *Zeitschrift für physikalische Chemie* and received the Franklin Institute's Langstreth Medal in 1913. He died on March 19, 1916.[52]

Joseph Christie Whitney Frazer succeeded Remsen as head of the chemistry department at Hopkins. He was born in Lexington, Kentucky on October 30, 1875, took his B.S. 1897 and M.S. 1898 at Kentucky and his Ph.D. under Remsen at Hopkins in 1901. He joined the staff at Hopkins as assistant in 1901 and became associate in 1906. Between 1907 and 1911 he was head of the research laboratory of the U.S. Bureau of Mines at Pittsburgh, Pennsylvania. He returned to Hopkins and was

named professor and head of the department in 1916, succeeding Remsen. During World War I he worked on the gas mask program at Hopkins for the Chemical Warfare Service. In 1921 he was named Baker Professor of Chemistry. In 1925 he received the Sc.D. from Kenyon College. Through 1925 he supervised the research of 26 Ph.D. candidates on topics in osmotic pressure and vapor tension of solutions, catalysts and adsorption, and on surface chemistry. At the ninety-seventh ACS meeting in Baltimore in 1939, Frazer was honorary chairman. He died on July 28, 1944.[53]

CHEMICAL WARFARE

Ebenezer Emmet Reid was born in Fincastle, Virginia, on June 27, 1872. He graduated from Richmond, A.M. 1892, and from Hopkins, Ph.D. 1898. He was professor of chemistry at College of Charleston, 1898–1901, and at Baylor University from 1901 to 1908. He returned to Hopkins as a Carnegie assistant in 1908 and was a Johnston scholar, 1909–11. He was a research chemist at Colgate and Co., 1911–14, and again returned to Hopkins, this time as associate professor in 1914. He became professor of organic chemistry in 1916. From that year to 1925 he supervised the research of 31 Ph.D. candidates. He was retired to professor emeritus in 1937, but he continued to work as a consultant and in writing.[54]

During World War I Reid was called upon by Professor Frazer to take charge of organic research on chemical warfare for the Bureau of Mines which had the first responsibility for it for the Army. Frazer had been at the Bureau of Mines and had been associated with George Burrell, who was in charge of the organization. Reid was assigned to procure possible toxic agents. He was acquainted with many of the organic chemists in the universities and asked them to make possible toxic agents as a service to the United States. He had no funds to pay for anything, but he was given franked envelopes for his correspondence and travel orders with which he could travel anywhere in the country. He asked William N. Dehn of University of Washington for cacodyl derivatives and Elmer Kohler of Harvard, a Remsen Ph.D., to make perchloromercaptan. [Cacodyl compounds contain arsenic; mercaptans contain sulfur.] Harry S. Fisher at Columbia had his students make quite a number of compounds.[55]

Working with Reid and Frazer on this program was Benjamin Franklin Lovelace, who earned his Ph.D. at Hopkins in 1907 under Morse and returned to Hopkins as associate professor in 1911. Reid, Frazer, and Lovelace made frequent trips to the Bureau of Mines in Washington, and they were authorized to employ six of their graduate students to work under them in the Hopkins labs. They were put to work making compounds and were the first organized and paid group in the country to work on chemical warfare problems.[56]

Reid himself was familiar with chloroacetophenone, which he had made and used some years before. He took a sample of it to Washington for testing. It aroused interest, and more was called for. Reid had his group make it in quantity, so much that in spite of precautions, the lab got saturated. "When we went in in the morning, it was bad, but after the hoods got going, we got along." Field tests were conducted in October 1918, too late for effect on the war, but it later came into use as a lachrymator for dispersing mobs. The product wasn't patented, and Reid never got a cent out of it.[57]

The Army took over chemical warfare, built laboratories at American University in Washington, D.C., and brought in chemists from universities to work in them. The organic chemists working on offensive agents conferred every Thursday, and Reid as unofficial secretary of the group kept notes. As compounds were suggested, they were assigned to individuals to make. As made, the compounds were passed to the toxicological group for testing.

Hopkins graduate students were drafted from time to time, but most of them were detailed back to the laboratory; others were also sent there so that by the armistice, there were 14 in Reid's lab, all in uniform. At first, Frazer and Reid were taken as "dollar-a-year" men, but later they were paid at the rate of five dollars a day from October to May and ten dollars a day during the summer vacation. They thought they

could serve best out of uniform so they could devote their attention to problems for which they were best qualified and which they felt were most important. As Reid put it, "We could come and go and talk to high and low without waiting for orders. Once in uniform we might have been detailed to some unimportant task." At times he wished, just a bit, for the glamor of being called by a title, "but I have gotten on fairly well as a plain citizen."

After the Germans introduced mustard gas in the summer of 1917, Reid's group took up ways of making it and studying its reactions. Ethylene chlorohydrin was the basis of the German process. They knew that no one in America knew how to make this intermediate. This was true as far as large scale production was concerned. Reid found that it was simple to produce, but Moses Gomberg of the University of Michigan moved faster and published the method.

Reid also worked on butyl mercaptan, which was wanted as a camouflage gas. After he had worked out the method, a pilot plant was put up at American University, and a ton of the gas was sent to France. He also worked on substituting ferric chloride for aluminum chloride to make acetophenone, which was the intermediate for chloroacetophenone. He also made large samples of arsenic trifluoride for testing as a toxicant and chromyl chloride, which is a fair incendiary.

The chemical warfare lab at Hopkins was closed down in January 1919, but in July 1920 Reid was appointed consultant to the Chemical Corps, and for the rest of his career he visited Edgewood regularly, talking with those working on various problems. At first it was one afternoon a week, later once a month as appropriations dwindled; during World War II it was every Saturday, afterwards about twice a month. His chief interest has been in organic sulfur compounds, particularly mustard gas and related compounds.

Reid authored or co-authored more than 200 scientific papers and a number of books. Among the latter are *Introduction to Organic Research* (1924), *College Organic Chemistry* (1929), a six-volume treatise—*Organic Chemistry of Bivalent Sulfur* (1958–66), and *My First Hundred Years* (1973). He was a director of the American Chemical Society, 1934–37, and in 1947 he received the Herty Medal of the Georgia Section of ACS. During his later years he suffered severe loss of hearing and almost total blindness. His last books were written with the help of students who read to him. Reid died at the age of 101 on December 21, 1973.[58]

Walter A. Patrick, born in Syracuse, New York, on January 6, 1888, took his B.S. at Syracuse, 1910, and his Ph.D. at Göttingen, 1914. He was research associate at Massachusetts Institute of Technology, 1910–12, assistant at University College, London, 1914–15, instructor in physical chemistry at MIT, 1915–16, and at Syracuse, 1916–17. He was appointed associate at Hopkins, 1917, and professor of physical chemistry in 1924.[59]

With Patrick as their consultant, Davison Chemical Co. developed a number of products from silica gel—driers and catalysts—and started manufacturing them in its Curtis Bay plant in 1920, later in a plant in Cincinnati.[60]

By 1925, Patrick had supervised the research of 24 Ph.D. candidates. Before he retired in 1958 he was in the department of sanitary engineering and water resources at Hopkins working on desalination of sea water. He also taught physical chemistry at Loyola College in Maryland, from which he received an honorary LL.D. in 1956. He died in Baltimore on March 31, 1969.[61]

Nutrition

Elmer Verner McCollum was born near Fort Scott, Kansas, on March 3, 1879, son of a hardscrabble but industrious and intelligent farmer and an equally ambitious mother. At age 11 he had to take over plowing and other farm chores that his father had to relinquish because of failing health. In 1896 the family sold the farm and moved to Lawrence so Elmer and his brother Burt could go to high school, then to college. In Lawrence Elmer supported himself as a lamplighter, later as a lecture-table assistant at the university. He graduated in chemistry from Kansas, B.S. 1904, and accepted a scholarship at Yale where

he found ways to support himself, first by teaching chemistry at the YMCA, later as a tutor to Yale students. He earned his Ph.D. 1906 in organic chemistry and spent an additional year at Yale as a post-doctoral student studying biochemistry.[62]

McCollum's first professional position was at the Wisconsin College of Agriculture working on animal nutrition. This work was being advanced at that time by experiments with calves. McCollum introduced the use of albino mice as experimental media, and in his work with them he discovered in 1912 the existence of fat-soluble vitamin A. In 1915 he postulated the existence of water-soluble B.

In 1917 McCollum was appointed head of chemistry at the new School of Hygiene and Public Health at Johns Hopkins University. There he continued his nutritional studies and discovered the existence of vitamin D. In 1947 he was honored by having a new research program on the influence of trace elements on nutrition, financed by John Lee Pratt, named the McCollum-Pratt Institute at Johns Hopkins. He lectured widely and wrote on the nutritional roles of the vitamins and trace minerals; his articles in *American Magazine* and *McCalls* drew nationwide attention. His book, *Newer Knowledge of Nutrition*, went through five editions from 1918 to 1939 and sold 68,000 copies.

In 1944 McCollum reached the age of retirement, but he continued for the duration of the war. He became emeritus professor in 1946, but a Rockefeller Foundation grant supported his work for nine years in preparing amino acids on a large scale. In retirement he reviewed the literature from 1797 to write *A History of Nutrition: The Sequence of Ideas in Nutrition Investigations*, (1957). Still later he wrote his autobiography, *From Kansas Farmboy to Scientist*, (1964). McCollum died in Baltimore on November 15, 1967[63]

ACIDIMETRY

William Mansfield Clark was born in Tivoli, New York, on August 17, 1884. He graduated from Williams College, A.B. 1907, A.M. 1908, and from Johns Hopkins, Ph.D. 1910. During his college years he had worked several summers at Woods Hole, Massachusetts, and through contacts there he was offered a position as chemist with the Bureau of Dairy Industry, U.S. Department of Agriculture.[64]

Given the freedom to choose topics, he worked on the composition of gases given off by bacteria, including those in milk, bovine feces, and grains. From these studies he learned that cow's milk has about the same acidity as human milk, rather than higher as thought. This led to stopping the practice of adding alkali to cow's milk that was to be given to infants.

With Herbert August Lubs, Clark worked out a group of some 13 dyes which could be used as indicators over nearly the entire range of pH (acidity). They also described a number of phosphate and borate buffer systems. During this time Clark began his first book, *The Determination of Hydrogen Ions* (1920).

In 1920 Clark moved to the Hygienic Laboratory of the U.S. Public Health Service [the present National Institutes of Health], where he was appointed professor of chemistry. There he continued his studies begun at the Dairy Division on oxidation-reduction potentials of dye systems. In 1927 he was appointed DeLamar Professor of Physiological Chemistry in the School of Medicine of Johns Hopkins where he continued his studies on the oxidation-reduction behavior of organic compounds, particularly the metalloporphyrins. Often using model compounds, he developed the concept of oxidation-reduction, acid-base continuum in natural systems. His last book was on *Oxidation-Reduction Potentials of Organic Systems* (1960).

During World War II Clark was chairman of the Division of Chemistry and Chemical Technology of the National Research Council where he helped organize the survey of antimalarial compounds. Among the honors he received was the Maryland Chemist Award (1963), of which he was the second recipient; the first was E. Emmet Reid. The award is given annually to one of its own members by the Maryland Section (Baltimore) of the American Chemical Society. He also received the Nichols Medal (1936), the Borden Award (1944), the Passano Award (1957), and

honorary degrees from Williams College (1935) and the University of Pennsylvania (1940). He served as president of the Society of American Bacteriologists (1933) and of the American Society of Biological Chemists (1933–34). He retired in 1952 and died on January 19, 1964.[65]

Capitalizing on his work with W. Mansfield Clark on identifying dyes sensitive to variations in pH, Herbert A. Lubs collaborated with Frank L. LaMotte, a research chemist trained at Johns Hopkins and Wisconsin, to develop a pH testing kit that they promoted into the LaMotte Chemical Products Co. Lubs was born in Savannah, Georgia, on December 20, 1891, and graduated from Newberry College, A.B. 1910, and from Johns Hopkins, Ph.D. 1914. He started with the U.S. Public Health Service in 1914, was with the U.S. Department of Agriculture, 1914–19, and was with the DuPont Co. until he retired in 1955, specializing in dye chemistry and intermediates and indicators. Lubs died on July 14, 1970.[66]

Frank Linton LaMotte was born in Westminster, Maryland, in 1893, graduated from Johns Hopkins in 1913, and did graduate work in chemistry at the University of Wisconsin. He formed the company with Lubs in 1919 and came out with the first LaMotte pH Comparator in 1920. Other kits followed, including the chlorine comparator, oxidation–reduction indicators, micro blood chemistry tests, and apparatus for studying plant nutrients in soils. LaMotte moved the business to Chestertown, Maryland, in 1949, and he died there on February 13, 1977.[67]

William Anthony Taylor was born in Jarrettsville, Maryland, on November, 6, 1886 and graduated from Randolph–Macon College, A.B., A.M. 1908, and from Johns Hopkins, Ph.D. 1914, where he did his research under S. Farlee Acree. He was research chemist for the Carnegie Foundation, 1914–16, instructor of inorganic chemistry at the University of Wisconsin, 1915–16, chief of the sulfur color department of the DuPont Co., 1916–21, and chief of the organic department of the Chemical Warfare Service, Edgewood Arsenal. He joined LaMotte Chemical Products Co. in 1924 as vice president and was president from 1926 to 1929 when he resigned to form a company under his own name to make water testing equipment. He sold the firm in 1967 and died in Baltimore on August 2, 1977.[68]

Medical School

The University of Maryland is unique among state universities in having been started with its medical school; this was in 1807, and a chemist was one of the three founders. John Shaw was the first chemist of record in Maryland. He was born in Annapolis on May 4, 1778 and earned his A.B. 1796 at St. John's College, Annapolis. He attended medical lectures in Philadelphia in 1798 and in the same year received appointment as surgeon in the U.S. Navy. He sailed for Algiers where for a year and a half he held a position partly medical, partly consular. In 1801 he went to Edinburgh to study, 1803 he went to Canada as a colonizer with the Earl of Selkirk, and in 1805 he returned to Annapolis and began practice with Dr. J. T. Shaaff, his mentor at St. John's.[69]

In 1807 Shaw arrived in Baltimore when John Beale Davidge and James Cocke were giving instruction in anatomy and medicine to half a dozen apprentices. Shaw joined them to teach chemistry. After the three men built at their own expense a two–story medical laboratory behind Davidge's home on Saratoga St., Shaw drafted a bill establishing the College of Medicine of Maryland as a private institution. The bill passed both houses of the Maryland legislature in December of that year. The first members of the faculty included "Dr. John Shaw, professor of chemistry." Shaw did not have a medical degree, but since the other members of the faculty were M.D.s, the legislators added "M.D." to Shaw's name so he became Doctor of Medicine by Act of Assembly.[70]

The next year the faculty rented an abandoned schoolhouse to accommodate the new enrollment, and during the winter it was so drafty and cold that several of the faculty got pneumonia. Shaw contracted "pleuresy from conducting his experiments, his arms immersed in cold water." His colleagues sent him south to recover, but he

died at sea on his way to the Bahamas on January 10, 1809, age 30.[71]

The successor to Shaw was Elisha DeButts, fresh from his degree at Philadelphia. He was able to get an appropriation from the legislature of $5,000 for laboratory apparatus and went to Europe to buy it. With this the medical school was able to advertise its chemistry laboratories, along with its anatomy museum, as the finest in the country. DeButts and Davidge commenced to give private tutoring lessons to students who needed them, but when their material appeared on examinations but not on regular lectures, faculty members protested, and they had to stop. In retaliation, DeButts, when he was sent to Annapolis to report on the school to the legislature, painted a picture of inefficiency. As a result, the legislature appointed trustees to oversee the schools, the first step to eventual state control.

Other schools had been joined with the medical school in 1812 to form the University of Maryland when the medical faculty persuaded the legislature to grant a university charter which authorized them to annex three other faculties which were already offering courses: one for arts and sciences, one for divinity, and a third for law. The charter provided no means of state oversight so the University of Maryland was at first essentially a private institution.[72]

DeButts died of pneumonia on April 3, 1831. His successor was Jules Timoleon Ducatel.[73] Ducatel was born in Baltimore on June 6, 1796, the son of Edma Ducatel, a pharmacist. Jules was educated at St. Mary's College, Baltimore, and went into his father's business in 1816. He was dissatisfied with this, however, and his father sent him to further his education in Paris where he studied chemistry and geology and became acquainted with Gay Lussac and other French scientists. He returned in 1822, and his first appointment was as professor of natural philosophy at the Mechanics Institute of Baltimore. Then he became professor of chemistry and geology in the Faculty of Arts and Sciences of the University of Maryland. In 1831 he was elected to succeed DeButts in the Medical School where he served until 1837. For a time, 1830–31, he edited a weekly journal, *Baltimore Times*. He also served as Maryland State Geologist, 1833–41, and conducted geological research until 1841 when state appropriations for it were suspended. He was also appointed to the chair of chemistry, mineralogy, and geology at St. John's College, Annapolis, a post he resigned in 1838 in order to devote himself exclusively to his geological work.[74]

In 1843 Ducatel embarked on an expedition to explore the geology of the upper Mississippi to clear up some points in the theory of volcanic action supposed to have occurred in this region. The death of his co-explorer, Nicollet, prevented completion of the project. In 1846 he visited the Lake Superior region to reconnoitre the territory for proposed industrial development. The exposure he suffered on these trips weakened his health, and he died in Baltimore of congestion of the lungs on April 23, 1849.

Ducatel was a founder of the Maryland Academy of Science and Literature, 1822–47, and he wrote a *Manual of Practical Toxicology*. The first edition, published in Baltimore (1832) was almost entirely burned in a storehouse fire, but a second edition was published the next year. He also contributed scientific articles to *American Farmer* and to *Sporting Magazine*.

The successor to Ducatel in the chair of chemistry at the College of Medicine was William E. A. Aiken, who was born in New York state in 1807, and graduated from Rensselaer Polytechnic Institute. His mentor at RPI was Amos Eaton, the first teacher in the country to put students at the laboratory bench in contrast to the usual practice in those days of limiting laboratory experience to demonstrations by professors. Aiken became a licentiate of the New York State Medical Society and entered medical practice. He soon received an honorary M.D. from the Vermont Academy of Medicine. He disliked country practice, however, and gave up medicine in favor of science.[75]

Aiken became a resident of Maryland in 1832 and became assistant to Ducatel in the department of chemistry during the

1936–37 session. Ducatel resigned in the summer of 1837, and Aiken was elected to replace him in October. Aiken was dean of faculty, 1840–41 and 1844–45 and also held the positions of professor of natural philosophy in the School of Arts and Sciences of the University of Maryland, of lecturer in the Maryland Institute, and of city inspector of gas and illuminating oils. He stepped down as emeritus professor in 1883 and died on May 31, 1888. Aiken was a devout Catholic and had 14 children by his first wife. When she died, he remarried and had 14 more.[76]

Robert Dorsey Coale was the first matriculant at Johns Hopkins University when it opened in 1876; his registration receipt read "No. 1." He was born in Baltimore on September 13, 1857 and graduated from the Pennsylvania Military Academy in Chester, C.E. 1875. He was a fellow in chemistry at Hopkins, 1881–83, and in 1883 was appointed to a lectureship on chemistry and toxicology in the Medical Department of the University of Maryland. In 1884 he was elected to the faculty in that chair and in 1895 was elected dean of the faculty of physic. During the college years 1883–84 and 1885–86 he gave courses of lectures at the College of Notre Dame of Maryland.[77]

For 20 years Coale was an officer of the National Guard of Maryland, and at the outbreak of the Spanish-American War he was lieutenant colonel of his regiment. He was commissioned colonel when his unit was mustered in as the Fifth Maryland Volunteer Infantry. As a result of this, he was thereafter usually addressed as Col. Coale. Under Governor Lowndes he was for four years liquor license commissioner of Baltimore.[78]

College Park

The College Park branch of the University of Maryland is an outgrowth of the Maryland Agricultural College, which was chartered on March 6, 1856. In 1887 the Maryland Experiment Station was established as a result of the Hatch Act establishing land grants for state colleges. The experiment station was located adjacent to the Agricultural College and eventually merged with it. In 1916 the state took over full control of the college and renamed it Maryland State College. In 1920 it was consolidated into the University of Maryland with the Baltimore schools.[79]

The first state inspection law for materials sold to farmers (1833) was confined to plaster of Paris. The law was broadened to fertilizers in 1848 when Higgins was appointed state chemist. Inspection of feeds was added in 1900, and pesticides were included in 1958. At first the inspections were performed in Baltimore, but when the Agricultural College was established, it was given the responsibility for inspections, and the staff of the chemistry department did the work. The head of the department was ex officio state chemist.[80]

The last president of the Maryland College of Agriculture was Harry Jacob Patterson, who was born in Yellow Springs, Pennsylvania, on December 17, 1867. He got his B.S. at Pennsylvania State College in 1886, was assistant chemist at Pennsylvania Experiment Station, 1886–88, and at the Maryland Experiment Station he was chemist, 1888–98, director and chemist from 1898. He was president of the college, 1913–17, and dean of the College of Agriculture, University of Maryland from 1925. He served as secretary of the Maryland State Board of Agriculture, 1908–16, and was president of the Society of Agricultural Chemists in 1912. He died on September 11, 1948.[81]

The first head of the department of chemistry at College Park was Henry Barnett McDonnell, who was born in Florence, Pennsylvania, on October 31, 1863, took his B.S. at Pennsylvania State College, 1886, M.S. 1909. He took an M.D. at the College of Physicians and Surgeons, Baltimore, 1888, and studied at Johns Hopkins, 1891–92. He became professor of agricultural chemistry at Maryland, 1891, professor of chemistry, head of the department, and Maryland State Chemist, 1892–1922. McDonnell was also dean of the School of Science, 1914–21. From 1922 to 1929 he was chemist for pathological investigations at the Maryland Experiment Station, during which tenure he studied the characteristics of ozone. It was once thought that ozone would be beneficial in the treatment of tuberculosis. Through experiments with

guinea pigs, however, he discovered that ozone is poisonous to animals. He was professor of agricultural chemistry at Maryland from 1929 to his retirement. He died on February 7, 1958.[82]

The next head of the chemistry department at College Park was Neil Elbridge Gordon, 1921–28. Gordon was born in Spafford, New York, on November 7, 1886, and went to Syracuse University, Ph.B. 1911, A.M. 1912; later he was to get his B.Ped. (1922) there, also. He began his teaching career in Baltimore and attended Johns Hopkins as a part-time student; he got his Ph.D. under Reid in 1917. He was assistant professor of inorganic chemistry at Goucher College, 1917–19, and became professor of physical chemistry at Maryland in 1919, director of the department and state chemist in 1921.[83]

While attending his first ACS meeting in Rochester, New York, in 1921, Gordon conceived the idea of a Division of Chemical Education, which would sponsor papers in that field at national meetings. In 1908 the ACS had placed the responsibility for organizing programs for its meetings with autonomous, member-oriented subject divisions and by 1921 had 13 such groups. With encouragement from Harry N. Holmes, Edward Ellery, and Edgar Fahs Smith, Gordon found others who supported the idea. He proceeded to organize a program and presented it at the fall meeting in New York (1921). After the second program difficulties in placing papers for publication surfaced, and Gordon took steps to start a divisional journal. He prepared a dummy, solicited advertising, got papers, and signed up the Mack Printing Co. of Easton, Pennsylvania, to print it. [Mack was already printing other ACS journals.] The first issue of *Journal of Chemical Education* came out in January 1923. Gordon was editor-in-chief, mostly because he had failed to convince Edgar F. Smith of the University of Pennsylvania to accept the position. He wanted Smith, who had twice served as ACS president, to lend prestige to the journal, and Gordon was usually persuasive. Smith, however, had hopes for a journal on the history of chemistry and didn't feel he could do both; he was adamant.[84]

The journal broke even in its first year, but Francis P. Garvan of the Chemical Foundation found out about it and decided it should be larger; he offered support that made it possible. Garvan had been Alien Property Custodian during the war, and he dedicated the money from the sale of confiscated, German-owned U.S. patents to the support of chemistry. Garvan also requested Gordon to travel among the states to stimulate the formation of regional organizations of chemistry teachers such as the one in New England. Garvan underwrote this effort by hiring Ross A. Baker of Syracuse University to come to Maryland for a year to take over Gordon's teaching and to assist in the editorial work. Gordon took leave of absence to travel among the states and succeeded in forming many regional groups. This movement also increased circulation and editorial support of the journal, which were its goals.

Later, in order to enable Gordon to devote his full time to the journal, Garvan paid his salary; Gordon remained at the university but received no salary from it. President Woods of the University of Maryland agreed to the plan and appointed L. B. Broughton as associate head of the chemistry department and Leslie E. Bopst as associate state chemist to fill in for Gordon.

In 1928 Johns Hopkins called Gordon to become professor of chemical education, the first in the country. In 1931 Gordon organized a conference on Gibson Island, near Baltimore, where scientists from academia and industry could discuss their interests in a leisurely and informal manner amid pleasant surroundings. A key to the conference was that it was off the record—no papers would be published. The conferences were established on a permanent basis in 1938 under the auspices of the American Association for the Advancement of Science with Gordon, then secretary of the AAAS section on chemistry, as director. To honor Gordon, they were renamed Gordon Research Conferences in 1948 and are now held in New Hampshire.[85]

In 1933 Gordon resigned from editorship

of the journal, and in 1936 he became chairman of the chemistry department at Central College in Missouri. While there he negotiated the purchase by Central, with the aid of benefactors, of the great private library of the late Samuel Hooker. After several years, however, it became evident that Central was not able to maintain the library, and Gordon found a new sponsor in the Kresge Foundation and a new host in Wayne State University. The library was transferred as the Kresge–Hooker Library, and Gordon became chairman of the chemistry department at Wayne State in 1942. He instituted the doctoral program at Wayne State, but ill health forced him to resign the chairmanship in 1945. He continued as director of the Friends of the Kresge–Hooker Library and editor of *Record of Chemical Progress*, which he had founded in 1936 as a medium for the lectures sponsored by the library. His other publications included three textbooks and 26 research papers between 1921 and 1936. On May 30, 1949 he committed suicide by jumping from the roof of the 12-story hotel in which he was living in Detroit.

Levin Bowland Broughton became head of the chemistry department at Maryland after Gordon left; he served from 1929 to 1938. He was born in Pocomoke, Maryland, on March 29, 1886, and got his B.S. 1908 and M.S. 1911 at Maryland and his Ph.D. at Ohio State, 1926. He became assistant chemist at the Experiment Station at Maryland in 1908, associate professor in 1916, professor of agricultural chemistry in 1918, and head of the department and state chemist in 1929. In 1938 he was appointed dean of the College of Arts and Sciences and a commissioner of the Maryland State Department of Geology, Water Resources, and Mines. He was best known for his researches in agricultural chemistry, including studies in soil acidity, the ascaridole content of chenopodium oil, potash as a by-product of alcohol production, biological changes in pork during aging, and vitamin assays. He died on December 13, 1943.[86]

Broughton was the last department head who was also state chemist. Upon his death the associate state chemist, L. E. Bopst, moved up to state chemist. He was nominally on the faculty of the chemistry department but with a separate staff and without teaching responsibilities.[87]

Nathan Lincoln Drake was the next head of the chemistry department, 1939–59. He was born in Watertown, Massachusetts on December 21, 1898, and took all of his degrees at Harvard: A.B. 1920, A.M. 1921, Ph.D. 1922. He was a Sheldon travelling fellow in Europe, 1922–23, a research chemist at Mallinckrodt Chemical Works, 1923–25, and at Procter and Gamble Co., 1925–26. He became professor of industrial chemistry at Maryland, 1926, of organic chemistry, 1928, and head of the department in 1939. For his work during the war on the synthesis of some 80 compounds for the wartime antimalarial survey he was awarded the Hillebrand Prize of the Washington Section of ACS. His group was the first to synthesize pentaquine and another successful antimalarial, chloroquine. He was also director of the Institute of Molecular Physics at Maryland. He died on October 13, 1951. The lecture hall in the chemistry building at College Park is named in his honor.[88]

Other Colleges

St. John's College, Annapolis, founded in 1786, was the second college in Maryland [Washington College in Chestertown (1783) was the first] and while chemistry was not taught as a subject, natural philosophy was being taught by 1792. Hector Humphries, who became president of St. John's in 1835, was interested in chemistry and is recorded as having analyzed the sulfur waters of Bedford Springs, Pennsylvania.[89]

Mount Saint Mary's College in Emmitsburg, Maryland, was founded in 1803 as a feeder for St. Mary's Seminary in Baltimore, but immediately non-clerical students were accepted. The first record of chemistry's being taught there is in a catalog of 1836–37 in which Anthony Hermange is listed as "Professor of Natural Philosophy and Chemistry." Hermange was born in 1797, probably in Baltimore. He studied at Mount Saint Mary's from 1809 to 1813; he went back to Baltimore to study medicine and graduated from the Univer-

sity of Maryland Medical School in 1826. He also studied in Paris, Montpelier, and London. He returned to Mount Saint Mary's in 1829 as professor of philosophy, and he also taught geography. In 1833 he left to live in Cincinnati, but he returned to Mount Saint Mary's in 1835 and stayed until 1839. During his years at the college, Hermange founded the Philosophy Society of Mount Saint Mary's, which ran from 1835 to 1840. Essays on such topics as meteorology, porosity, volcanoes, formation of dew, and imponderable agents were written and presented at meetings of the society.[90]

John Alexander Lockwood was appointed surgeon and professor of chemistry at the U.S. Naval Academy, Annapolis, when it was founded in 1845. A native of Delaware, Lockwood graduated from the Medical School of Dickinson College, Carlisle, Pennsylvania, and in 1832 was commissioned as an assistant surgeon in the U.S. Navy. He is said to have been an able doctor and was early concerned with, first a dispensary, and then a small hospital at the academy. He also taught chemistry and was head of the department. In December 1849 he was detached for service in the East India and Mediterranean squadrons. In 1858 he was put in charge of the Naval Hospital at the New York Navy Yard in Brooklyn. After serving as fleet surgeon of the Pacific in the Civil War, he resigned from the Navy, lived in California for a while, and then moved to England where he died in 1900.[91]

Loyola College in Maryland (Baltimore) was founded in September 1852, and chemistry was required of all college seniors. The first active instructor of chemistry was James A. Ward, S.J., who taught at Loyola from 1852 to 1857; his academic title was "professor of natural philosophy." He was born in Philadelphia in 1813 and became a Jesuit in 1832. He continued his studies at Georgetown University where he taught and served in various administrative capacities until his transfer to Loyola in 1852. A student described him as "gentle as a dove, wise as a serpent . . . a tenderhearted, sympathetic, affectionate man" who also displayed a "caustic humor." He had a broad, calm face and a "hoarse, broken voice." In 1857 he was sent to St. Joseph's College in Philadelphia where he served briefly as president. He stayed in that city for the rest of his life except for a brief return to Baltimore in the 1870s when he served as dean. He died in 1895.[92]

Considered the most significant early instructor in chemistry at Loyola was William Tonry, who went to Baltimore in the 1870s from Georgetown and from service with the Federal government. He later became state chemist and taught at Loyola from 1891 to 1902. His son, also a chemist, substituted occasionally for Dr. Tonry in Loyola classrooms.

Charles Cotton Blackshear was the first professor of chemistry at Goucher College. He was born in Macon, Georgia, on December 10, 1862, graduated from Mercer University, B.A. 1881, and spent his next five years in mercantile pursuits. Then he went to Johns Hopkins University where he studied chemistry, mineralogy, and geology, getting his Ph.D. under Remsen. He was appointed associate professor of chemistry at Goucher in 1891 and professor in 1898. The catalog lists the courses he taught in 1891 as "general chemistry" and "chemistry of the carbon compounds with some lectures on inorganic chemistry." His salary for the year 1893–94 was $1,200 and for 1895–96 was $1,300.[93]

Blackshear had the reputation of being brutal in grading exams. One of his students, Letitia Stockett, who was of a literary and not scientific bent, received a paper back with the comment, "Very good, Miss Stockett, just a little below passing." Another exam was returned with "½" on it. When Letitia asked if it stood for 50, she was told, "No, Miss Stockett, it stands for one half of digit one." "However," said Mrs. Elsie Clark Krug, classmate of Miss Stockett, in a recent report, "he must have been a charming man. Or Letitia Stockett was a glutton for punishment because she is listed in the 1909 *Donnybrook* as secretary of the 'Chemical Association' of which he is president and the only other listed member!"[94]

Blackshear took a trip around the world at the turn of the century and fell in love with eastern art and architecture. Upon the

death of his mother in 1916, with whom he had lived, Blackshear quit his job at Goucher and set off on a trip to the Orient. He had no intention of returning. He headed for India, but he never made it past Java, then a Dutch colony, where he lived for the rest of his life—almost 25 more years. The Boroboedoer, an ancient Buddhist temple under excavation there, became his life's work. He learned the Pali and Sanskrit languages to aid his research. He took his visitors, many of them Goucher alumnae, on tours of the temple, and through his efforts it became something of a tourist attraction. He lived at the Grand Hotel de Jakarta and ate in the hotel dining room. He always wore a black business suit where other westerners wore white, but he sent his white shirts home to Baltimore to be laundered.

Louise Kelley was born on October 10, 1894 in Franklin, New Hampshire, graduated from Mt. Holyoke College, A.B. 1916, A.M. 1918, and was instructor in chemistry at Wheaton College, 1917–18. She then went to Cornell University where she earned her Ph.D. in 1920. In 1920 she became assistant professor of chemistry at Goucher, associate professor, 1923, and professor, 1930. In 1929 she studied with Fritz Pregl at Graz, Austria, and in 1932 she collaborated with G. Albert Hill of Wesleyan College to publish their text, *Organic Chemistry*, the second edition of which she revised herself in 1943. Early in her career she began editorial work with ACS journals and served as assistant editor of *Journal of Physical and Colloid Chemistry*, 1937–59, and of *Chemical Reviews*, 1931–61. In 1949 she received the President's Certificate of Merit for her wartime work in directing the information center for the chemical divisions of the Office of Scientific Research and Development. She served as acting dean of Goucher College, 1947–49, and as chairman of the chemistry department from 1949 until her retirement in 1959. On retirement, Goucher conferred upon her the honorary degree of D.Sc. In 1931 she married Edward S. Hopkins, but they were divorced in 1937. She died on November 12, 1961 in her birthplace, where she had lived since retirement.[95]

John Joseph Griffin was the first chairman of the chemistry department at the College of Notre Dame of Maryland (Baltimore). He was born near Corning, New York, on June 24, 1859. He graduated from Ottawa College (Canada), B.A. 1881, M.A. 1883, and was ordained a Roman Catholic priest on May 1, 1885 after study at the Ottawa Diocesan Seminary. He was instructor of physics at Ottawa College for a year, and a priest in the archdiocese of Boston for a year. In September 1887 he returned to Ottawa as instructor in physics and chemistry until 1890 when he entered Johns Hopkins. While there he gave classes in chemistry at St. Joseph's Seminary and Notre Dame of Maryland, which was incorporated as a four-year college in 1895. Griffin studied under Remsen and received his Ph.D. in 1895. After a year of post-doctoral study in Germany, he returned to the College of Notre Dame and was appointed chairman of chemistry in 1897. All students for the B.S. degree were required to take chemistry, and in 1902 when the B.S. degree was dropped, the chemistry requirement was increased to two years, unusual for a college for women in those days.[96]

At the same time he began at Notre Dame, Griffin was establishing the chemistry department at the new Catholic University of America in Washington, D.C., then a school for graduate study only. He was responsible for laying out the chemistry laboratories in both schools. He later became dean of the School of Sciences at Catholic University.[97]

When World War I broke out and caught the United States without chemical supplies, every laboratory in the country was offered to the government, and Catholic University was one of the first to loan its own. Former students were called back to work in the labs, and among Griffin's students was Julius A. Nieuwland, who had worked with acetylene and its compounds for his doctoral thesis at Catholic University. The two priests worked day and night and finally came forward with the deadliest chemical then known, a compound of acetylene and arsenic trichloride. They found the directions for making it in an old German journal; the Germans had apparently

forgotten all about it. Samples were sent to the head of the chemical division of the Chemical Warfare Service, Winford Lee Lewis, a Northwestern University professor. He developed the plant process for the gas, and it was called Lewisite after him. Neither priest wanted his name known in connection with this deadly weapon. Nieuwland returned to Notre Dame University (Indiana) after the war and became noted for his synthesis of rubber-like materials from acetylane.[98]

In June 1921, at age 70, Griffin resigned from Catholic University. He was under way with a strenuous new program in chemistry at Notre Dame of Maryland with Sister Denise Dooley, who had come into the department that year, when he died in Baltimore on November 16, 1921. He is buried on the grounds of the college. His hobby was photography, and he left a large collection of his slides on chemistry and travel scenes to the college.

Sister Denise Dooley became the second chairman at Notre Dame on the death of Griffin. She was born on April 24, 1891 in Boston, had studied under Griffin before World War I, and was sent to Fordham University to obtain her B.A. 1921 and M.S. 1922. She obtained her Ph.D. at Johns Hopkins in 1934 and was thereupon made professor at Notre Dame. While still chairman of chemistry she was dean of the college from 1931 to 1941. During World War II she was instrumental in establishing an accelerated program in chemistry so students could finish college in three years and enter medical schools to help the war effort sooner. In 1943 she organized the Chemistry Club and in 1948 the Student Affiliate Chapter of ACS. She died in Baltimore on December 23, 1972 and is also buried in the college cemetery.

CHEMISTS IN PHARMACY

Up until the middle of the nineteenth century chemicals were handled almost exclusively by druggists. According to DuMez:

> They dealt, not only in chemicals used for medicinal purposes but in paint pigments, chemicals used in tanning, fertilizer chemicals, and so on. And the first chemical manufacturing plants established in Maryland endeavored to supply all of these materials .... As medical and pharmaceutical science progressed, demands for chemicals of greater purity and for certain special chemicals used exclusively in medicine were created. These demands the pharmacists themselves attempted to meet, and in some cases they were met by chemists who had a pharmaceutical training. The drug firm of Andrews and Thompson, established in 1853, at one time manufactured hydrocyanic acid for the pharmacists in Baltimore. They also made such chemicals as gold chloride, silver nitrate, and calcium hypophosphite.[99]

William R. Fisher, born in Philadelphia in 1808, was one of the earliest graduates of the Philadelphia College of Pharmacy and came to Baltimore in 1827 where he engaged in literary and scientific enterprises. He established a pharmacy about 1834, was professor of botany in the University of Maryland's School of Letters, and was professor of chemistry in the university's Trustees' School, 1837–39. In 1839 he devised a plan for the Maryland College of Pharmacy, but he was soon stricken with hemiplegia and returned to Philadelphia that same year. [The Maryland College of Pharmacy was incorporated in Baltimore in 1841.] He was professor of general and pharmaceutical chemistry at Philadelphia College of Pharmacy in 1841, but he taught only one term. He retired to follow his spiritual calling to prepare himself for the ministry. Illness came, however, and he died near Philadelphia on October 25, 1842. He had published a number of papers on pharmaceutical and chemical topics and took part in the revision of the pharmacopeoia as a member of the committee appointed by the Philadelphia College of Pharmacy.[100]

Alpheus Phineas Sharp, first graduate of Maryland College of Pharmacy, opened his apothecary shop in Baltimore in 1845. In 1851 he took on as an apprentice, Louis Dohme, who was a fifteen-year old German boy. In his spare time, Dohme attended Maryland College of Pharmacy. He graduated in 1857 and became the store's pharmacist. In 1860 he became a partner in the firm, which was renamed Sharp & Dohme. During the Civil War the company supplied

medicines to the Union armies. In 1865 the company purchased the building next door to the shop and started manufacturing drugs which at first were galenical preparations; chemical manufacturing commenced in 1886. Louis' brother, Charles Dohme, who also went through Maryland College of Pharmacy, was in charge of production. Sharp retired from the firm in 1885, and the Dohme brothers bought out his interest. The firm was incorporated in 1892 with Louis Dohme, president, Charles Dohme, first vice-president, and Alfred Robert Louis Dohme, Charles' son, second vice president and director of research.[101]

Alfred Dohme was born in Baltimore on February 15, 1867, attended Johns Hopkins for his A.B. 1886, Ph.D. 1889. He studied at Wiesbaden under Fresenius and at Berlin, Strasbourg, and Paris, 1890–91. He returned to take up his duties at Sharp & Dohme where he made a number of changes in the conduct of the plant, introduced a thorough system of analytical control of all products, and began research along chemical lines. In 1911 he became president of the firm.[102]

In 1898 Dohme was president of the Maryland Pharmaceutical Association, which his uncle, Louis Dohme, had helped found. At a meeting of the Maryland College of Pharmacy on October 5, 1882, college president and pharmacist Joseph Roberts offered resolutions calling for a state organization. A committee of fifteen was formed which issued an invitation to all pharmacists, chemists, and wholesale and manufacturing druggists in the state to meet the following May to organize the state organization. In response to the call, 25 apothecaries met at the Maryland College of Pharmacy on May 8, 1883 to adopt a constitution and elect officers. By the end of the year the association had 73 members, 50 from Baltimore and the rest from 16 other communities around the state from Oakland to Salisbury.[103]

Alfred Dohme taught pharmacy at Johns Hopkins Medical School, 1900–12. For ten years, 1900–10, he was secretary of the National Committee of Revision of the U.S. Pharmacopoeia. He was active in the American Pharmaceutical Association and served as its president in 1917. He retired as president of Sharp & Dohme in 1929 but continued as a director. He died in Baltimore on June 10, 1952.

In 1882 Alonzo L. Thomsen, one of the sons of J. J. Thomsen, who was a member of the drug firm of Thomsen and Block, opened a laboratory to make pharmaceuticals. He served his apprenticeship in pharmacy with his father and then studied chemistry at Heidelberg. For many years he manufactured for the drug trade potassium bromide, potassium iodide, solution of iron chloride, Epsom salt, sodium phosphate, zinc sulfate, iodoform, ammonium chloride, bismuth subnitrate, resublimed iodine and sulfuric, nitric, and hydrochloric acids. Thomsen advertised as "manufacturing chemist".[104]

John Jacob Abel was born on May 19, 1857 near Cleveland, Ohio, and graduated from the University of Michigan, Ph.B. 1883. He studied part of a year at Johns Hopkins and went to Germany where he studied the medical sciences for about seven years in various universities. At Strasbourg, where he received his M.D. in 1888, he worked in the laboratory of Oswald Schmiedeberg, the most prominent pharmacologist of the day. At Schmiedeberg's recommendation, he was appointed lecturer in materia medica and therapeutics at the University of Michigan. Two years later he became professor of pharmacology at Johns Hopkins, from which he retired in 1932. He died on May 26, 1938.[105]

While Abel has been called the "father of American pharmacology," his real love was research. He believed in the importance of chemistry for medicine and for pharmacology, and most of his work was in biochemistry. He was organizer of *Journal of Biological Chemistry* (1905) and the American Society of Biological Chemistry (1906). In 1897 in the early days of hormone research he isolated the substance in extracts from the adrenal medulla which is responsible for raising the blood pressure. While he believed he had obtained the pure hormone, which he named epinephrine, he had actually isolated its benzoyl derivative.

Following the preparation of insulin extracts by Banting and Best in 1922, Abel

was the first to obtain crystalline insulin, which he did in 1925. In 1913, Abel and his coworkers devised a "vividiffusion" apparatus for removing diffusible substances from the circulating blood of living animals by dialysis. With this apparatus, they were able to demonstrate clearly for the first time the presence of free amino acids in normal blood. Abel also recognized the clinical potential of this apparatus, which is the intellectual forerunner of modern "artificial kidney" machines.

Abel was also influential in promoting in Baltimore a publishing program that has been important to the chemical and medical professions. It was his suggestion that resulted in the publishing plans of Willams & Wilkins Co.—that an organization specialize in printing and publishing scientific books and periodicals. Very few publishers handled such material at the time this suggestion was made—1925. In addition to starting many medical periodicals, Williams & Wilkins was the first publisher of *Chemical Reviews*, of *Journal of Organic Chemistry*, and from 1933 publisher of *Journal of Physical Chemistry*, all three of which have since been acquired by the American Chemical Society.[106]

MERCUROCHROME

Henry Armitt Brown Dunning was born in Denton, Maryland, on October 24, 1877, and at age 16 started work in a local pharmacy. Next year he moved to Baltimore and went to work for the drug firm of Hynson and Westcott. In 1897 he graduated from the Maryland College of Pharmacy, later took graduate work at Johns Hopkins, and in 1908 received Pharm. D. from the University of Maryland. He served in the Army during the Spanish–American War, enlisting as a private and becoming first sergeant in Cuba. After the war he returned to Hynson and Westcott in charge of the prescription department. He was later taken in as a member of the firm, which then became Hynson, Westcott, & Dunning, and in 1930 he became president.[107]

The business, which was started by Henry P. Hynson and James W. Westcott, both of whom were graduates of the Maryland College of Pharmacy, first operated as a retail pharmacy in which the scientific and professional aspects were emphasized. By 1900 it employed 40 people, and in 1910 the first work of a strictly chemical nature was undertaken when Drs. Rowntree and Geraghty sought Dunning's cooperation in distributing the phenolsulfonephthalein test solution they were using to estimate kidney function. The product was a dye that had been discovered by Remsen, and J. J. Abel had suggested its medical application. Dunning improved the then tedious process for producing the solution on a commercial basis. At Geraghty's suggestion, Dunning made a mercury compound of the dye which was investigated as a urinary antiseptic. Later, the synthesis of dibromoxymercurifluorescein was accomplished, and Dunning worked out the process for its soluble sodium salt, which became Mercurochrome, the popular antiseptic. Hynson, Westcott & Dunning made and marketed the product, but it became a center of controversy with Johns Hopkins which claimed royalties because of the part members of its staff played in its development. Still later Dunning prepared monohydroxymercuriiodoresorcinsulfonphthalein, known commercially as Merodicein, one of the two active ingredients of Thantis lozenges.[108]

Dunning received honorary degrees from Philadelphia College of Pharmacy, University of Maryland, Washington College, Johns Hopkins, and the College of Notre Dame of Maryland. The main building at Maryland College of Pharmacy and buildings at Johns Hopkins and Washington College at Chestertown carry the Dunning name, the results of his gifts. He served as vice-president of the U.S. Pharmacopoeia and as president of the American Pharmaceutical Association (1930). He was a strong supporter of APhA, whose headquarters were close to the Hynson, Westcott, & Dunning offices until 1934 when APhA moved into its building in Washington, D.C.[109]

Dunning's three sons, James Henry Fitzgerald Dunning, Charles Alexander Dunning, and H. A. Brown Dunning, Jr., joined him in the business. Dunning died on July 26, 1962[110].

Deans of Pharmacy

Charles C. Caspari, Jr., the son of a pharmacist who had been trained in Germany before coming to this country, was born in Baltimore on May 31, 1850. He graduated from the University of Maryland's School of Arts and Sciences in Baltimore, since discontinued, and at the age of 15 he was apprenticed in the store of Sharp & Dohme and entered Maryland College of Pharmacy, graduating in 1869. His father had hoped to send him to Germany for study, but when his father died, young Caspari took over his store; later he conducted pharmacies of his own. In 1877 he became professor of theory and practice of pharmacy at Maryland College of Pharmacy, and in 1890 he sold his store.[111]

At Maryland, Caspari inaugurated one of the first laboratories for instruction of practical pharmacy in the country. He became dean of the faculty in 1896. Caspari, Simon, and Base were leaders of the research carried out at the college to develop and improve assay methods for standardizing drugs and their preparations. He wrote a text on pharmacy and was for years pharmaceutical editor of the "National Standard Dispensatory." He took active parts in revisions of the "U.S. Pharmacopoeia" and the "National Formulary." When Maryland adopted a pure food and drug law in 1910, Caspari became the first commissioner. He supervised dairies, bottled water plants, canneries, packing houses, slaughter houses, and cold-storage plants. He also promulgated the regulation abolishing the public drinking cup and required the use of paper cups at soda fountains and elsewhere. He died suddenly at his home in Baltimore on October 13, 1917.

Daniel Base was born in Baltimore on September 6, 1869, and graduated from Baltimore City College, 1888, and from Johns Hopkins, A.B. 1891, where he took his Ph.D. under Remsen (1895). He was professor of chemistry and plant physiology at Maryland College of Pharmacy, 1895–1920, professor of inorganic chemistry at the College of Physicians and Surgeons, Baltimore, 1899–1904. He served reluctantly as dean for one year after the death of Caspari in 1917; at the College of Pharmacy he is known as "the forgotten dean" because his is the only portrait missing from the row of portraits of deans in the lobby. He became chief chemist at Hynson, Westcott, & Dunning in 1920. He wrote *Elements of Vegetable Histology* (1898), and he revised William Simon's *Manual of Chemistry* in 1923. Base died on June 17, 1926.[112]

Andrew Grover DuMez was born in Horicon, Wisconsin, on April 26, 1885, took his B.S. at Wisconsin, 1907, and was instructor in pharmaceutical chemistry there until 1910 when he got his M.S. He was professor of chemistry at Pacific University (Oregon) for a year; then he taught chemistry at Oklahoma Agricultural and Mechanical College. He was director of the School of Pharmacy at the University of the Philippines, 1912–16. He returned to the University of Wisconsin where he got his Ph.D. in 1917. He was appointed to the U.S. Public Health Service as associate pharmacologist in the Hygienic Laboratory in Washington. In 1926 he was appointed dean of the School of Pharmacy of the University of Maryland. From 1920 he was a member of the Committee of Revision of the U.S. Pharmacopoeia and served terms as president of the American Pharmaceutical Association and of the American Association of Colleges of Pharmacy. He was consultant to the War Manpower Commission in 1942, and in 1947 he was appointed pharmacy consultant to the Surgeon General of the U.S. Army. He died while attending a committee meeting in Washington, D.C., on September 27, 1948.[113]

Chemists at Edgewood

American mobilization for chemical warfare during World War I brought a number of eminent chemists to Maryland. Early research and development were conducted at American University and Catholic University in Washington, at Johns Hopkins University in Baltimore, and at a number of other universities around the country. But when it came to production, the area known as Gunpowder Neck at Aberdeen Proving Ground near Edgewood, Maryland, was chosen as the site for the first shell-filling plant. Within months, however, plants were erected for producing the toxic

materials that went into the shells, and a mammoth chemical complex was constructed and put into operation in record time. Commanding officer of Edgewood Arsenal, as it was soon named, was Col. William Hultz Walker, professor at Massachusetts Institute of Technology. He had graduated from Pennsylvania State College, B.S. 1890, from Göttingen, Ph.D. 1892, and was professor of industrial chemistry at MIT from 1900.[114]

Major William Lloyd Evans, professor of chemistry at Ohio State University and later president of the American Chemical Society, was director of the chemical laboratories at Edgewood. Assisting him was W. O. Robinson of the U.S. Department of Agriculture.[115]

Lieut. Col. William McPherson, dean of the graduate school at Ohio State and also later a president of ACS, was in charge of contacts with outside plants operated by chemical companies that were producing toxic materials to be filled into shells at Edgewood. Associated with him was Major Orlando Russell Sweeney, then of Ohio State but later head of chemical engineering at Iowa State College. Among others assisting McPherson were Major E. E. Free and Captain J. D. Rue[116]

Majors Francis C. Frary and Sterling N. Temple, then at Oldbury Electrochemical Co., had charge of phosgene development; they helped design, build, and operate the phosgene plant at Edgewood. Frary was later director of research at Aluminum Co. of America. After the war, Temple went with DuPont's R. & H. Chemicals Department. Lieut. Col. C. F. Vaughn, then of Matheson Alkali Works, Niagara Falls, was in charge of the chlorine plant.[117]

Originally, Edgewood Arsenal was organized under the Ordnance Department, but when the Chemical Warfare Service was organized, Edgewood was transferred to it, and the executive offices were transferred from Washington to Baltimore. The offices occupied the top two floors of McCoy Hall, one of the old Johns Hopkins University buildings.[118]

Wilder Dwight Bancroft, professor at Cornell and founder and editor of the *Journal of Physical Chemistry*, was a lieutenant colonel at Edgewood and compiled a history of the chemical warfare operations; the manuscript is deposited in the library at Edgewood Arsenal.[119]

REFERENCES

The assistance of Wyndham D. Miles in providing information on some of the earlier Maryland chemists is gratefully acknowledged. Others to whom thanks are due for help in providing information are: Mrs. Harold M. Porter of Hagerstown, Maryland, Mrs. Louise Porter Moore of Cherry Valley, N.Y., John J. Porter, 3rd, of Hagerstown, Maryland, Victoria Turley of Mount Saint Mary's College, Prof. Samuel P. Massie of U.S. Naval Academy, Prof. Nicholas Varga of Loyola College in Maryland, Dr. James L. A. Webb of Goucher College, Sister Mary Vincent Callahan of College of Notre Dame of Maryland, the Reverend J. Winfree Smith of St. John's College, Mrs. Bryce Jacobsen of Maryland Hall of Records, Prof. Carl Rollinson of University of Maryland, retired, John M. Kopper, Johns Hopkins University, and Ernest Silversmith, of the Maryland Section of the American Chemical Society.

1. A. G. DuMez, "Development of Pharmaceutical Chemistry in Maryland," *Journal of Chemical Education* 8, 471 (1931); Edward B. Mathews, "Chemical Industries and the Raw Materials in Maryland," *J.C.E.* 8, 485 (1931).
2. DuMez, "Pharmaceutical Chemistry," p. 472; W. H. Hartung, "Early Chemistry in Maryland," *Baltimore* 32 [6], March 1939, p. 42.
3. Williams Haynes, *American Chemical Industry* I, 180 (New York, 1954).
4. Mathews, "Chemical Industries," p. 486; George W. Carpenter, *Essays of Some of the Most Important Articles of the Materia Medica*, p. 13 (Philadelphia, 1831).
5. Hartung, "Early Chemistry," p. 44; Carpenter, *Essays*, p. 13.
6. Hartung, "Early Chemistry," p. 44; Isaac Tyson, Jr., *Address of the Friends of Domestic Industry Assembled in Convention at New York, October 26, 1831* (Baltimore, 1831).
7. Hartung, "Early Chemistry," p. 44.
8. Hartung, "Early Chemistry," p. 44; Marc Darrin, *Chesapeake Chemist*, October 1945.
9. Anonymous, *Chesapeake Chemist*, December 1957.
10. Hartung, "Early Chemistry," p. 44.
11. Will of Isaac Tyson, Jr., Baltimore City Wills, Book 30, Folio 158.
12. Anonymous, "'Soldiers' Delight'—Historical Reminiscences," *Maryland Monthly Magazine* I [5], November 1906, p. 11.
13. Hartung, "Early Chemistry," p. 44; "Diversification Increasing," *Chemical & Engineering News* 32, 2440 (1954); "Mutual Chemical Company of America," Williams Haynes, *American Chemical Industry* VI, p. 287 (New York, 1939).
14. Anonymous, "The Story of the Fertilizer Industry in Baltimore," *Baltimore* 31 [7], April 1938, p. 27.
15. Hartung, "Early Chemistry," p. 44; "Fertilizer in

Baltimore," p. 27; "Davison Chemical Corp.," *Baltimore* 32 [6], March 1939, p. 57.
16. "Fertilizer in Baltimore," pp. 29, 33.
17. "Davison Chemical Corp.," Williams Haynes, *American Chemical Industry* VI, p. 94 (New York, 1939); Obituary of William Davison, *Baltimore Sun*, October 19, 1881; "Grace and Davison Boards Approve Merger of Firms," *C&EN* 32 [18], 1840 (1954).
18. "Anonymous, "American Chemical Society Convenes in Baltimore, April 3–7," *Baltimore* 32 [6], March 1939, p. 38; Membership List, American Chemical Society, 1876; Anonymous, *Biographical Cyclopedia of Representative Men of Maryland and D.C.*, p. 168 (Baltimore, 1879).
19. Wyndham D. Miles, "William Simon," *American Chemists and Chemical Engineers*, p. 442 (Washington,1976); *Biographical Cyclopedia*, pp. 466–7; "Prof. William Simon," *American Men of Science*, 2nd ed., p. 429 (New York, 1910).
20. "Fertilizer in Baltimore," p. 31; True, *History of Agricultural Extension*, p. 5; *Reports of James Higgins, M.D., State Agricultural Chemist, to the House of Delegates of Maryland*, vols. 1–3 (Annapolis, 1852); Anonymous, *Country Gentleman* 4, 261 (1854); Vivian Wiser, "Improving Maryland's Agriculture, 1840–1860," *Maryland Historical Magazine* 64 [2], 107–08 (1969).
21. "Philip T. Tyson," *National Cyclopaedia of American Biography*, 13, p. 453 (New York, 1906); Richard H. Spencer, *Genealogical and Memorial Encyclopedia of Maryland*, I, p. 221 (New York, 1919); Will of Isaac Tyson, made December 19, 1861, filed February 4, 1864, proved February 1864, Baltimore City Wills, Book 31, Folio 406; Max Meisel, *A Bibliography of American Natural History* 3, p. 116 (Brooklyn, 1926).
22. Meisel, *Natural History*, 2, pp. 413, 553–4, 557; "Philip T. Tyson," *Appleton's Cyclopedia of American Biography*, 6, p. 204; Philip T. Tyson, "Notice of Some Localities of Minerals in the Counties of Baltimore and Harford," *American Journal of Science and Arts* 18, 78–81 (1830).
23. Ralph S. Bates, *Scientific Societies in the United States*, p. 47 (New York, 1945); Meisel, *Natural History* 2, p. 412; Obituary of Philip T. Tyson, *Baltimore Gazette*, December 17, 1877; Will of Philip T. Tyson, made April 21, 1876, proved December 22, 1877, Baltimore City Wills, Book 44, Folio 195.
24. Frederic A. Kummer, "William Bose Dobbin Penniman, M.D., Ph.D.," *The Free State of Maryland* 2, pp. 862–4 (Baltimore, 1937); W. B. D. Penniman obituary, *Industrial & Engineering Chemistry, News Edition* 17 [1], 32 (1939); Will of William B. D. Penniman and Anne Stirling Penniman, of Howard County, made April 1936, recorded November 2, 1950, filed in Baltimore City, February 19, 1964, Baltimore City Wills, Book 297, Folio 82.
25. Dorothy D. Deal, "Arthur Lee Browne," *American Chemists*, pp. 51–2.
26. "Charles P. Van Gundy," *American Men of Science*, 5th ed., p. 1144 (1933); Obituary of Charles P. Van Gundy, *C&EN*, 36 [52], 87, 96 (1958); Member records, American Chemical Society.
27. "Prof. J. G. Porter," *American Men of Science*, 2nd ed., p. 375; "John Jermain Porter," *Who's Who in America* 28, 2147 (Chicago, 1954); Private records of John J. Porter, 2nd, in possession of Louise Porter Moore (Mrs. Howard), Cherry Valley, New York.
28. Private records of John J. Porter, 2nd.
29. *Ibid.*; Charles Catlett to James A. Holmes, April 22, 1912, U.S. Bureau of Mines General Correspondence, National Archives, Record Group 70, Box 52, 159.33, File 23346.
30. Private records of John J. Porter, 2nd; Catlett to Holmes, April 19, 1912; Holmes to Catlett, April 20, 1912.
31. Private records of John J. Porter, 2nd; Private records of John J. Porter, 3rd, Hagerstown, Md.; Certificate of Death of Harold M. Porter, Maryland State Department of Health, Baltimore; Private record of Nancy Boyer Porter (Mrs. Harold M.), Hagerstown, Maryland.
32. Private records of John J. Porter, 3rd; newspaer articles filed under "Porter Chemical Co.," in Maryland Room, Washington County Free Library, Hagerstown, Maryland.
33. Private records of John J. Porter, 3rd.
34. Anonymous, "Chemistry Sets Lead Science Toy Market," *C&EN* 48 [50], 22 (1970).
35. Obituary of John J. Porter, *Hagerstown Daily Mail*, March 11, 1956; Obituary of Harold M. Porter, *Hagerstown Daily Mail*, March 4, 1963.
36. Certificate of Death of Harold M. Porter; Obituary of John J. Porter; Obituary of Harold M. Porter; Will of John J. Porter, Washington County, Maryland, Wills, Book 23, Folio 82; Will of Harold M. Porter, Washington County, Maryland, Wills, Book 25, Folio 422.
37. John P. Revere, "On the Crude Sodas of Commerce," *American Journal of Science* 14, 41–50 (1828); "Patent 'for an improvement in the construction of ships, steamboats and other vessels as respects their metallic fastenings, and sheathing, by John Revere,'" *Ibid.* 16, 180–1 (1829); Obituary of John P. Revere, *Transactions of the American Medical Association* 3, 460–1 (1850); Alexandra Lee Levin, "John Revere, M.D.," *Maryland* 9, [1]. pp. 10–13 (1976).
38. Wyndham D. Miles, "Lewis Henry Steiner," *American Chemists*, pp. 455–6.
39. Robert M. Hawthorne, Jr., "Ira Remsen," *American Chemists*, pp. 402–3.
40. Hugh Hawkins, *Pioneer: A History of Johns Hopkins University, 1874–89*, pp. 140–1 (Ithaca, 1900).
41. Hawthorne, *American Chemists*, pp. 402–3; Hawkins, *Pioneer*, pp. 140–1.
42. "Johns Hopkins Ph.D.s in chemistry, 1879–1925," private tabulation of John M. Kopper.
43. "Johns Hopkins Ph.D.s"; "Harmon Northrup Morse," *Who Was Who in American History—Science and Technology*, p. 413 (Chicago, 1976).
44. Wyndham D. Miles, "Constantin Fahlberg," *American Chemists*, p. 151; C. Fahlberg and Ira Remsen, "Ueber die Oxydation des Orthotoluol-

sulfamids," *Chemische Berichte* 12, 469–73 (1879); Ira Remsen and C. Fahlberg, "On the Oxidation of Substitution Products of Aromatic Hydrocarbons. IV. On the Oxidation of Orthotoluenesulphamide," *American Chemical Journal* 1, 426–32 (1880).

45. Hawthorne, *American Chemists*, pp. 402–3; Constantin Fahlberg, "Manufacture of Saccharine Compounds," U.S. Patent 319,082, June 2, 1885; Frederick H. Getman, *The Life of Ira Remsen*, pp. 62–3 (Easton, 1940).
46. Alfred R. L. Dohme, *Chesapeake Chemist*, May 1948; Getman, *Remsen*, pp. 63–4.
47. Miles, *American Chemists*, p. 151; Getman, *Remsen*, p. 64.
48. Hawthorne, *American Chemists*, pp. 402–3; Getman, *Remsen*, p. 67; Dohme, *Chesapeake Chemist*.
49. Colin MacKay, "Lyman Beecher Hall," *American Chemists*, pp. 194–5.
50. Hawkins, *Pioneer*, p. 140; "Edward Renouf," *Who Was Who in American History*, p. 504.
51. Obituaries of Edward Renouf, *New York Times*, November 14, 1934, *Baltimore Evening Sun*, November 13, 1934; Editorial, *Ibid.*, November 14, 1934.
52. "Johns Hopkins Ph.D.s."; "Harry Clary Jones," *Who Was Who In American History*, p. 316.
53. "Joseph C. W. Frazer," *American Men of Science*, 5th ed., p. 380; "Johns Hopkins Ph.D.s"; Anonymous, *Baltimore* 32 [6], 38 (1939); Obituary of Joseph C. W. Frazer, *Baltimore Sun*, July 29, 1944.
54. "E. Emmett Reid," *American Men of Sciences*, 5th ed., p. 921 (1933): "Johns Hopkins Ph.D.'s"; Archives, Eisenhower Library, Johns Hopkins University.
55. "Johns Hopkins Ph.D.s"; E. Emmett Reid, "Reminiscences of World War I," [unpublished manuscript in possession of Wyndham D. Miles].
56. "Johns Hopkins Ph.D.s"; Reid, "Reminiscences"; "E. Emmett Reid," *American Men of Science*, 3rd ed., p. 422 (1921).
57. Reid, "Reminiscences."
58. Obituary of E. Emmett Reid, *C&EN*, 52 [1], 42 (1974).
59. "Walter A. Patrick," *American Men of Science*, 10th ed., p. 3107 (1961); "Patrick Receives Honorary LL.D.," *Baltimore Evening Sun*, May 31, 1956.
60. "Davison Chemical Corp.," Haynes, *Chemical Industry*, VI, pp. 95–6; "Patrick Honored for Silica Gel," *Baltimore Evening Sun*, February 19, 1940.
61. "Two Degrees Due," *Baltimore Evening Sun*, May 31, 1956; Obituary of Walter A. Patrick, *Baltimore Evening Sun*, April 1, 1969.
62. Elmer V. McCollum, *From Kansas Farmboy to Scientist* (Lawrence, 1964).
63. Agatha A. Rider, *American Chemists*, p. 342; Obituary of Elmer V. McCollum, *C&EN* 46 [3], 100 (1968).
64. George M. Atkins, Jr., *American Chemists*, pp. 79–80.
65. Atkins, *American Chemists*, pp. 79–80; "Clark . . . Gives Remsen Memorial Lecture," *C&EN* 30 [23], 2391 (1952).
66. "Herbert A. Lubs," *American Men of Science*, 10th ed., p. 2494 (1961); Johns Hopkins University Alumni Records.
67. "The LaMotte Chemical Products Co.," *Baltimore* 32 [6], 66 (1939); Obituary of Frank L. LaMotte, *Baltimore Sun*, February 17, 1977.
68. "William A. Taylor," *American Men of Science*, 5th ed., p. 1104 (1933); Obituary of William A. Taylor, *Baltimore Sun*, August 6, 1977.
69. E. G. Vanden Bosche, "Colleges and Universities in Maryland," *Baltimore* 32 [6], 46 (1939); J. Winfree Smith, St. John's College, Annapolis, Maryland, to author, August 1, 1981; George H. Callcott, *A History of the University of Maryland*, p. 20 (Baltimore, 1966); Eugene F. Cordell, "John Shaw," *Medical Annals of Maryland*, p. 565 (Baltimore, 1903).
70. Callcott, *University of Maryland*, pp. 20, 42.
71. Vanden Bosche, "Colleges and Universities," p. 46; Cordell, *Annals*, pp. 105–6; Callcott, *University of Maryland*, p. 25.
72. Vanden Bosche, "Colleges and Universities," p. 46; Cordell, *Annals*, p. 692; Callcott, *University of Maryland*, p. 29.
73. Callcott, *University of Maryland*, p. 67.
74. Obituary of J. T. Ducatel, *American Journal of Science* 8 (2nd Series), 146–9 (1849); Eugene F. Cordell, *Medical Annals of Maryland, 1799–1899* (Baltimore, 1903), p. 383.
75. Samuel Rezneck, "Amos Eaton," *American Chemists*, p. 135; Callcott, *University of Maryland*, p. 93; Eugene F. Cordell, *University of Maryland 1807–1907*, (2 vols.; Chicago, 1907), I: 264.
76. Cordell, *Maryland*, p. 264.
77. Cordell, *Maryland*, p. 264; Fliers on "Course of Lectures at Notre Dame of Maryland given by Prof. R. Dorsey Coale of the University of Maryland," 1883–4 and 1885–6, courtesy of Mary Vincent Callahan, College of Notre Dame of Maryland.
78. Cordell, *Maryland*, p. 310.
79. Callcott, *University of Maryland*, pp. 140, 170, 230, 231.
80. Information bulletin of Maryland State Inspection Service, Office of the State Chemist, College Park, Maryland.
81. "Director H. J. Patterson," *American Men of Science*, 5th ed., p. 863 (1933); Obituary of H. J. Patterson, *C&EN* 27, 94 (1949).
82. "H. B. McDonnell," *American Men of Science*, 5th ed., p. 712 (1933); Obituary of H. B. McDonnell, *C&EN* 36 [9], 128–9 (1958).
83. Donald R. Hays, "Neil E. Gordon," *American Chemists*, pp. 181–2; "Prof. Neil E. Gordon," *American Men of Science*, 5th ed., p. 425; Neil E. Gordon, *J. Chem. Educ.* 20, 369–72, 405 (1943).
84. Gordon, *J. Chem. Educ.* 20, 369–72, 405 (1943).
85. Hays, *American Chemists*, pp. 181–2; Obituary of Neil E. Gordon, *C&EN* 27, 1742 (1949).
86. "Dr. L. B. Broughton," *American Men of Science*, 5th ed., p. 138 (1933); Obituary of L. B. Broughton, *C&EN* 22, 132 (1944).

87. *Reports of the State Inspection and Regulatory Service*, No. 140, July 1931; No. 187, August 1943; No. 190, April 1944.
88. "Prof. N. L. Drake," *American Men of Science*, 5th ed., pp. 299–300 (1933); "Drake Named Hillebrand Prize Winner for Antimalarials Work," *C&EN* 26, 454 (1948); Obituary of N. L. Drake, *C&EN* 37 [44], 121 (1959); Personal record of Carl Rollinson, University of Maryland, retired.
89. Phebe R. (Mrs. Bryce) Jacobsen , Archivist, Hall of Records, Annapolis, Maryland, to author, September 10, 1981, Caspar Morris, "Notes on Bedford Springs, and the Diseases in which a resort to them is useful," *Medical Examiner* 8 [5], 358–61 (1852).
90. Letter, July 20, 1981, Victoria Turley, Mount Saint Mary's College, Emmitsburg, Maryland, to author.
91. Henry Francis Sturdy, "John Alexander Lockwood," *U.S. Naval Institute Proceedings*, October 1935, pp. 1401–02.
92. Nicholas Varga, Loyola College, Baltimore, Maryland, to author, July 23, 1981.
93. "Johns Hopkins Ph.D.'s"; James L. A. Webb, Goucher College, Baltimore, Maryland, to author, July 24, 1981.
94. Jane Moment Jordan, "Goodbye Chemistry, and no regrets; The Curious Tale of Dr. Blackshear," *Goucher Alumnae Quarterly*, Summer 1980, p. 7.
95. Webb, James L. A., "Louise Kelley," *American Chemists*, pp. 269–70; Anonymous, *Chesapeake Chemist*, October 1946; Obituary of Louise Kelley, *C&EN* 39 [51], 84 (1961).
96. "Johns Hopkins Ph.D.'s"; Letter, Mary Vincent Callahan, July 28, 1981.
97. Letter, Mary Vincent Callahan, July 28, 1981.
98. Letter, Mary Vincent Callahan, July 28, 1981. Obituary of Julius A. Nieuwland, *Ind. Eng. Chem., News Ed.* 14, 248 (1936).
99. DuMez, "Pharmaceutical Chemistry," p. 473.
100. Cordell, *Annals*, pp. 105–6, 396–7; John R. Quinan, *Medical Annals of Baltimore from 1608 to 1880*, pp. 98–99 (Baltimore, 1884); Joseph W. England, *The First Century of the Philadelphia College of Pharmacy*, p. 401 (Philadelphia, 1922).
101. Haynes, "Sharp & Dohme," *American Chemical Industry*, VI, 371–4; DuMez, "Pharmaceutical Chemistry," pp. 477–8.
102. "A. R. L. Dohme," *American Men of Science*, 5th ed., p. 291; DuMez, "Pharmaceutical Chemistry," p. 478; Obituary of Alfred Dohme, *New York Times*, June 11, 1952; Haynes, "Sharp & Dohme," p. 372.
103. B. F. Allen, "Formation of the Maryland State Pharmaceutical Association," *The Maryland Pharmacist*, (April 1982), pp. 4–5.
104. DuMez, "Pharmaceutical Chemistry," p. 473.
105. John Parascandola, "John Jacob Abel," *American Chemists*, p. 1.
106. Anonymous, "Williams & Wilkins," *Baltimore* 32 [6], 65 (1939).
107. "H. A. B. Dunning," *American Men of Science*, 10th ed., p. 1017 (1961); Anonymous, "Who's Who Among Local Section Officers," *Ind. Eng. Chem., News Ed.* 4 [19], 4 (1926); Anonymous, "Hynson, Westcott & Dunning, Inc." *Baltimore* 32 [6], 58 (1939).
108. DuMez, "Pharmaceutical Chemistry," pp. 480–2; Eric Drake, *Chesapeake Chemist*, March 1946; "Hynson, Westcott & Dunning," *Baltimore*, p. 58; Private records of Benjamin Allen, University of Maryland College of Pharmacy, Baltimore.
109. "H. A. B. Dunning," *American Men of Science*, 10th ed., p. 1017; Private records of Benjamin Allen.
110. "J. H. Fitzgerald Dunning," *American Men of Science*, 10th ed., p. 1017 (1961); "Charles A. Dunning," *Ibid.*; "H. A. Brown Dunning, Jr.," *American Men of Science*, 6th ed., p. 390 (1938); "H. A. B. Dunning," *Who Was Who In American History*, p. 170 (1976).
111. Obituary of Charles C. Caspari, Jr., *Baltimore Sun*, October 19, 1917; "In Memory of Prof. Charles Caspari, Jr.," *Catalog, University of Maryland College of Pharmacy*, pp. 4–5 (1917); "Charles C. Caspari," *American Men of Science*, 5th ed., p. 184 (1933).
112. "Johns Hopkins Ph.D.s"; "Daniel Base," *Who Was Who in American History*, p. 40; Private records of Benjamin Allen.
113. "A. G. DuMez," *American Men of Science*, 5th ed., p. 304 (1933); Private records of Benjamin Allen; "The 26th Remington Medalist—Andrew G. DuMez," *Journal of the American Pharmaceutical Association, Practical Pharmacy Edition* 9, 419–20 (1948); "Andrew G. DuMez," *Ibid.* 9, 659, 685 (1948).
114. Charles H. Herty, "Gas Offense in the United States. A Record Achievement," *Ind. Eng. Chem.* 11, 5 (1919); "William H. Walker," *American Men of Science*, 5th ed., p. 1163 (1933).
115. Herty, "Gas Offense," p. 11; Lawrence P. Eblin, "William Lloyd Evans," *American Chemists*, pp. 149–50; "William Lloyd Evans," *Journal of the American Chemical Society*, 77, 4949 (1955).
116. Herty, "Gas Offense," p. 8; Eblin, Lawrence P., "William McPherson," *American Chemists*, pp. 328–9; "William McPherson," *J. Am. Chem. Soc.* 74 [4], pp. 859–62; Obituary of William McPherson, *C&EN* 29 [42], 4314 (1951); "O. R. Sweeney," *American Men of Science*, 6th ed., p. 1380 (1938).
117. Herty, "Gas Offense," pp. 7, 11; "Francis C. Frary," *American Men of Science*, 5th ed., p. 379 (1933); Roy C. Bossert, "Francis C. Frary," *American Chemists*, pp. 159–60; "Sterling Temple," *American Men of Science*, 6th ed., p. 1407 (1938).
118. Herty, "Gas Offense," p. 8.
119. Wyndham D. Miles, "Wilder D. Bancroft," *American Chemists*, pp. 22–3.

Clifton Factory, 1810–1860—An Experiment in Rural Industrialization

BAYLY ELLEN MARKS

IN ITS INITIAL STAGES THE INDUSTRIAL revolution in the United States was as much a rural as an urban phenomenon. Industrialists sought out locations with abundant water power or in proximity to raw materials, and trusted that the prices they hoped to receive would more than compensate for transport costs and the expense of building villages to house and care for the needs of their employees. Some rural industries survived to become urban centers, particularly in New England. But many, perhaps most, did not. They have vanished with little trace on the landscape, and can be resurrected only by resort to archeology and censuses or state archives. Yet the story of these small enterprises is reflective of that stage in American industrialism before sophisticated technology squeezed out the minor entrepreneur.

While some manufacturing establishments grew in size and prominence, the growth of many was curtailed because of lack of adequate capital, skilled labor, and raw materials. Historians have assumed industrialization in plantation areas was retarded because it had to occur in a context in which land and labor were far safer and more profitable investments than industry. Moreover, inexpensive, reliable skilled labor was hard to find and retain. Thus while scale economies favored more heavily capitalized northeastern manufacturers, who could substitute machines for men, manufacturers in the plantation states fell farther and farther behind. Yet nearly all small rural manufacturers faced the same type of competition with the same disastrous results. Thus there may in fact be more similarities between small scale industries in plantation economies and in the northeast than there are differences.[1]

The textile industry is a case in point. The very earliest period of textile production in the United States was dominated by small mills scattered over the countryside. The northeast had the advantage of abundant water power and of local supplies of wool. Yet the early manufacturing activity in Virginia, the Carolinas, Kentucky and even in southern Maryland was based on proximity to supplies of cotton as well as to less abundant wool. Small rural textile mills often resembled the gristmills with which they shared a common power source. External differences might lie in the complexity and extent of the village surrounding the mill, for textile mills needed more workers. Gristmill owners, however, often diversified with cooperages, blacksmith shops, and even bake shops. Small textile mill villages were often indistinguishable from the enclaves around large gristmills. But because small textile mills soon became outmoded and were abandoned or converted to other uses they seem to have largely been ignored.[2]

Of late, as historians have begun to study the beginnings of American industrialization to discover its economic, sociological, and technological evolution, there has been a revival of interest in the small textile mills. So far, however, that interest has not extended far south of the Brandywine Valley. Studies in New England and in the Middle Atlantic states show that these small mills were often the enterprise of one or two individuals who supplied capital, the site, and possibly some managerial or technological expertise. Often they were quite conservative in allocating capital to what

Dr. Marks is Professor of History at Catonsville Community College.

was a risky venture. Mill villages, built to house workers lured away from highly paid but uncertain farm labor with the prospect of cheap housing and steady employment, share a common human geography. Most of these small enterprises also shared a common fate, becoming technologically outmoded long before they began to show steady profits. While many mills were products of the Napoleonic Wars, and attributed their decline to the restoration of English competition, small mills throughout the country suffered from other fatal diseases—lack of adequate power sources, uncertain supply of raw materials, inability to attract and keep skilled labor, and inadequate capital. Some, particularly in plantation areas, survived as transport costs kept more efficient producers out of their markets. But when they were unwilling or unable to expand, and found their costs exceeding profits, it was often domestic, not foreign competition which dealt the final, fatal blow.[3]

The rapidity with which large and well capitalized mills took over the cotton textile industry is apparent to anyone reading the pioneering works of William R. Bagnall, John L. Bishop, and Victor S. Clark. When the Union Manufacturing Company opened in Baltimore in 1812 with a capacity of 10,000 spindles it was reputed to be the nation's largest textile mill. By the 1830s mills with spindles in the thousands were common, particularly in New England, yet even there the average in 1825 was only 700 spindles. This increased capacity was needed to supply power looms, which appeared in the middle of the second decade of the century and were common after the 1820s. Before the 1820s most production was yarn for hand-loom weavers, who often rented looms in textile factories. But power looms required far more yarn production to keep them supplied than the hand-looms, and rapid technological improvements quickly made small yarn mills and hand weavers obsolete. Some companies survived into the 1830s, particularly in the rural south, where they could supply yarn for skilled slaves, but eventually railroads and steamboats penetrated these markets and ended their isolation.[4]

The experiences of Clifton Factory, a small textile mill located in St. Mary's County, may have been representative. St. Mary's economy, like that of the rest of southern Maryland, and indeed much of the tidewater Chesapeake, had been based on tobacco and slaves. In the decades between 1790 and 1810 the county's population declined from 15,544 to 12,794. Thereafter the population remained relatively stable until a period of growth in the 1850s. Like many older eastern plantation areas, St. Mary's was exporting her younger free population to areas of greater opportunity. At the same time the county's agricultural base was moving away from reliance on tobacco as its staple crop. Before 1820, as wheat became the crop of preference on more and more of the better lands along the Patuxent and Potomac rivers, the county saw increased prosperity, which set the stage for economic diversification and perhaps industrial growth.[5]

Clifton, begun in 1810, like so many small textile factories traces its origins to the Napoleonic Wars. It was organized to produce cotton yarn and cloth, but its partners also engaged in a variety of other industrial activities, including a gristmill. Although faced with increasing competition from industries in Central Maryland it continued to expand during the 1820s, protected in part by St. Mary's relative isolation. In 1834 increasingly ruinous competition, lack of profitability despite diversification, and dissension among its partners, forced its sale. The factory was reorganized and an attempt was made to carry on yarn production in the 1850s. The complex was again sold, the new owners continuing the gristmill alone well into the 20th century. Because the first stage of Clifton's growth ended in a bitter lawsuit between the partners, a great deal of detailed information on the factory's various departments survives. Close examination of the factory's books enables the reconstruction of the operations of the sawmill, tannery, woolen and cotton departments, and gristmill, while the rental accounts are a valuable aid in resurrecting the factory village. Clifton, although operating in a plantation economy dominated by slave labor, faced

the same problem with the same results as most other small rural textile factories.[6]

The site of Clifton (Map 1) was on a stretch of the St. Mary's River in the southeastern part of the county that was rapidly becoming the county's gristmilling and crafts center. Already in the 18th century Guither and Tarlton's Great Mill (one mile below Clifton) included a smith shop, storehouse, sawmill, and bake house as well

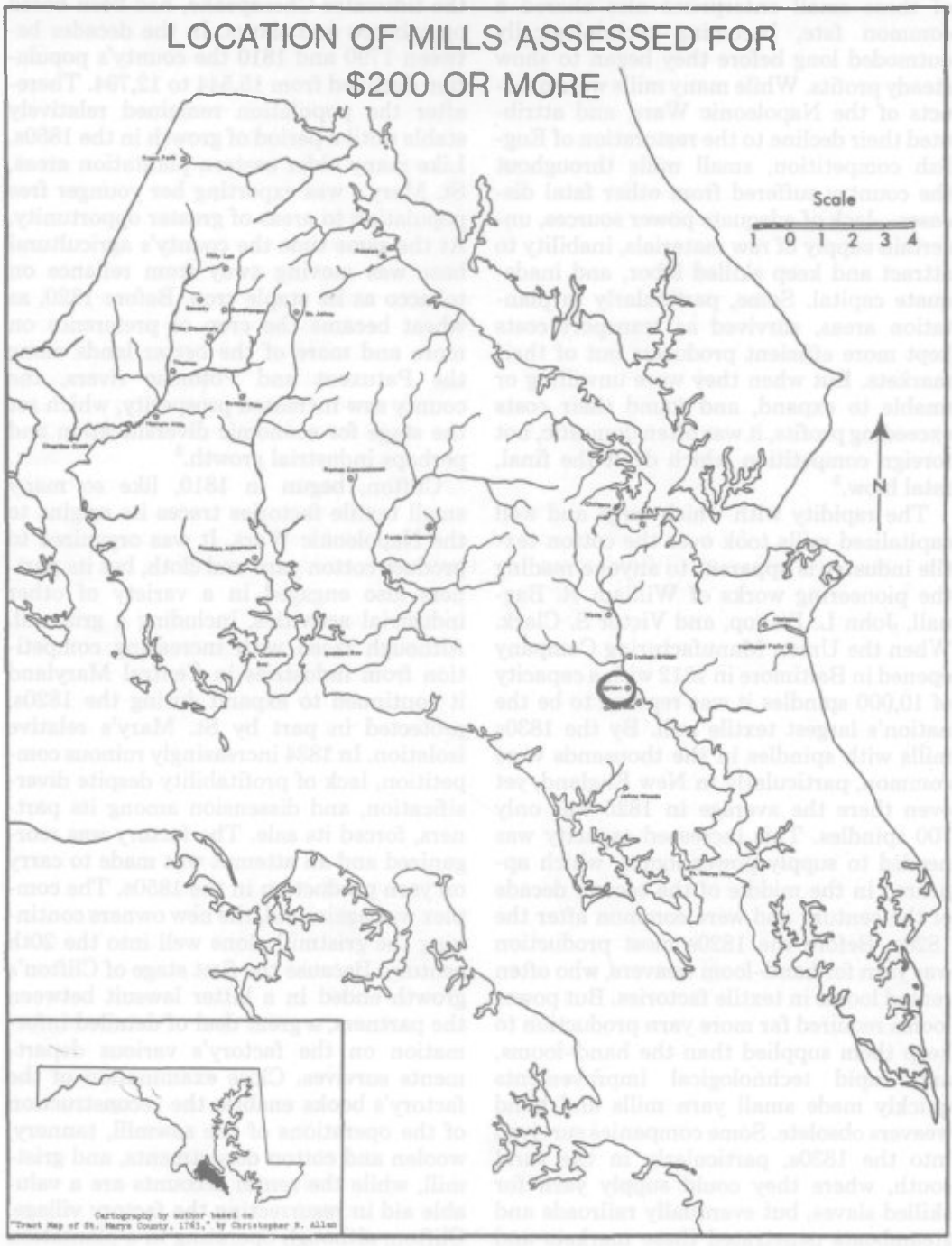

MAP 1

as a granary and bolting mill adjacent to the merchant gristmill. With a 15 foot fall the St. Mary's was one of the best locations in the county for water powered mills, and supported five mills along a four mile course of the river. The others were gristmills of various sizes, although two (Guither and Tarlton's and Indian Bridge) supported some additional industrial activities. Clifton Factory was unique, however, in the range of industry engaged in as well as in the longevity of the site. The factory gristmill, begun c. 1810, was in operation until 1959. That mill, built on the site of its predecessor c. 1900, as well as a general store (on the site of Clifton's tavern) and several other buildings still stand near the intersection of Maryland Route 5 and Indian Bridge Road. The other mills have vanished with little or no trace.[7]

The Factory's location was between two existing mills. Guither and Tarlton's Great Mill had apparently ceased operation, but reclamation of its site was always a threat. Indian Bridge, which dated from 1765, was not quite a mile up river and its proximity prevented the raising of Clifton's dam to ensure a steady water supply. The Factory site was determined by one of the original partners, William Hebb, who built a sawmill on a tract he owned in 1804. In 1810 he was joined by his nephew, William Clarke Somerville, and Leonardtown merchant Peter Gough. Hebb and Somerville, both wealthy men, supplied the land and capital. Gough was supposed to contribute the managerial experience, although his background as schooner captain and storekeeper hardly appear to qualify him to run a textile mill. Their decision to establish a textile factory was apparently the direct result of a series of resolutions by the Maryland legislature to encourage the domestic manufacture of woolen textiles. Throughout its early life the factory's operations emphasized textiles, although cotton yarn emerged as the major item manufactured rather than woolen cloth.[8]

Of Clifton's original partners, only Gough continued his association with the factory. He purchased half of Hebb's interest in 1816; the other half was sold to Daniel B. Taylor. In 1817 Archibald Binny of Philadelphia bought out both Taylor and Somerville. Binny, a Scotsman, had been a partner in a type foundry before he retired to St. Mary's. The terms of the original partnership were verbal. The partners agreed to put all the firm's profits into buildings and capital equipment. By 1813 the factory complex included a sawmill, gristmill, cotton–spinning factory, and wool–fulling mill; a tanyard appeared in 1818. A valuation taken in 1821 showed the factory complex worth $26,744. Included was a three–storey 48 × 30 factory house for cotton and wool spinning, a sawmill, a two–Burr gristmill, and a tannery. The industrial village had a storehouse, blacksmith's house and shop, tavern and appurtenances, and a manager's dwelling and outbuildings. There was a single and a double house for factory workers, and another double house was under construction. By 1828 additional buildings included a sulphur house, weaving house, two additional double houses, shoemakers shop and dwelling, and an assortment of stables, farm buildings, and necessaires. The total, with equipment, and land was valued at less than $18,000.[9]

The presence of Clifton encouraged the development of an enclave of craftsmen and merchants who settled in the village or in the immediate vicinity. The rents they paid and the purchases they made at Clifton's store helped keep the enterprise going during long periods when sales were slow and inventory piled up. By 1830, the Second District, in which the factory was located, contained 38 percent of the county's craftsmen and 30 percent of its retail merchants. Most of these settled within a few miles of Clifton, with clusters at Indian Bridge, Great Mills, and Warehouse Point (Map 2). Had the factory itself prospered and endured it might have changed the rural nature of that part of the county. But almost from the beginnings there appear to have been constraints on Clifton's growth and prosperity.[10]

The shortest lived and apparently least successful activity was the water powered sawmill. Located across the millrace from the other buildings, it pre–dated them by almost five years. This was the county's

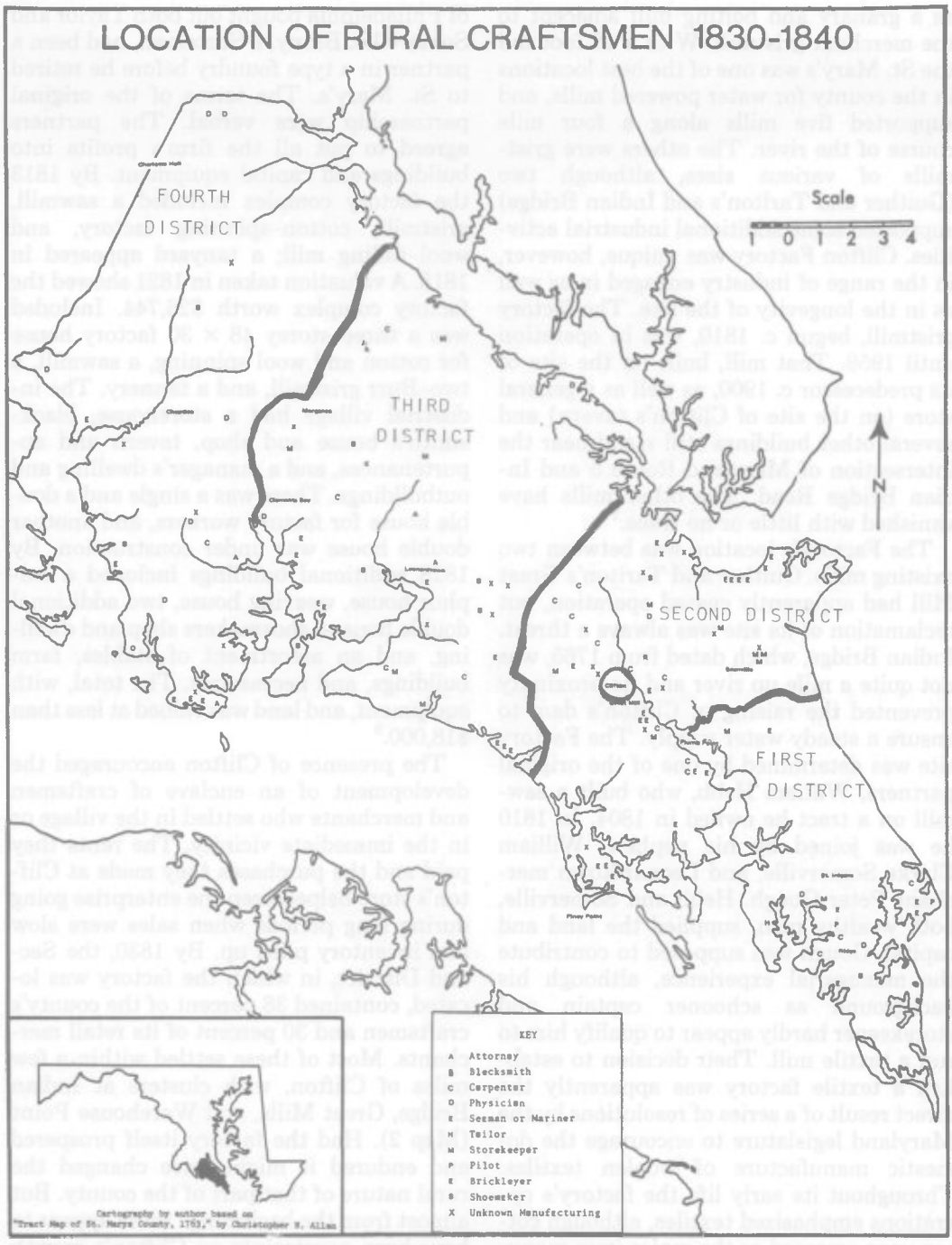

MAP 2

only known sawmill from the end of the 18th century until 1842, and was valued at $591 with equipment in 1821. Although it is mentioned in a description of the neighborhood written in 1826, and carried on the assessment books until 1841, factory accounts for 1827 show outside purchases of a large number of planks. As the sawmill was showing noticeable signs of deterioration by 1828, and was being used as a

warehouse in 1834, it is possible its operations were mainly for the convenience of the factory during its period of growth. When the factory was sold the new owners did not revive its operations, and in 1842 were credited merely with a "sawmill lot."[11]

The cotton and woolen departments were the central activities of the factory. It was the partners' hope that the production of cotton yarn and woolen cloth would flourish in St. Mary's County. These operations received the majority of the partners' capital and attention. On their changing prospects the factory's fortunes rose and fell.

Clifton was fully equipped for yarn production although it was a small mill even by the standards of 1820. The process of spinning yarn begins when the raw material arrives in bales. It goes to a "picker room" to be separated, then on to a blowing machine which transforms it into a smooth sheet of batting. Carding is the next step. The batting is combed or carded by machines working in pairs (a breaker and a finisher), emerging as a loosely twisted rope called a "sliver." These machines are preset to produce a sliver suitable for the weight of yarn to be spun. As the sliver comes from the carding machines it drops into a large can. The cans are delivered to drawing and roving frames, which stretch, twist, and entwine slivers into a "roving." This roving, wound onto a bobbin, is now ready to be spun into yarn. If a strong coarse yarn suitable for the warp threads of a loom is desired, the roving is spun on a throstle. Mules produce a finer yarn but require highly skilled operatives. In 1821 Clifton's cotton machinery, valued at $4100, included a cotton gin (most local cotton was purchased in seed), blowing machine, four carding machines (two breakers and two finishers), two drawing frames, a roving frame with seven heads, and three throstles with a total of 264 spindles. The absence of mules precluded the production of finer grades of yarn. Factory accounts confirm the production of coarse yarn—in 1826 "too coarse for the season."[12] The inventory taken in 1828 listed additional equipment, including 600 spring bobbins, a twine frame, and another cotton gin. The factory added a double speeder for more efficient stretching and doubling of the sliver. It was either the Patterson double speeder or the Brewster Eclipse speeder (which worked particularly well with limited water power) mentioned in the 1834 notice advertising the factory for sale. As yarn, not cloth, was the cotton factory's final product, the inventories did not include warping frames to assemble warp threads for looms. This was not at all unusual, for in the early years of textile production each function was carried on under separate roof.[13]

The woolen mill was more complete, designed to card and spin the yarn, weave it, and prepare cloth for sale. Woolen cloth after it is woven must be further processed by fulling, which presses or binds the threads together in a solution of fuller's earth. The cloth then must have its nap raised by stroking with teasels to prepare it for shearing. In 1821 the factory woolen department, with machinery worth $2518, had a picker, two carding machines, a 50 spindle spinning billy, a 60 spindle spinning jenny, and a fulling mill (essentially a large vat in which cloth was pounded by water powered hammers). Sometime during the ensuing decade they added more machinery, for in 1834 the mill contained warping equipment, looms, a Fullers press, a graining machine, shearing machine, and dyeing kettles.[14]

While there was continual investment in machinery, Clifton was constantly beset by problems of location, supply, and market. Despite its site on a stream "which scarcely ever fails from want of water"[15] there were indications of factory shutdowns because of low water. The proprietor of Indian Bridge made it clear that any attempt to raise the dam at Clifton would result in a lawsuit. The factory closed for a period of time in 1817, after a "freshlet" that destroyed Watt's mill about two and a half miles upstream. Major repairs were made to the milldam in 1826, providing employment for local ditchers, wood cutters, and carpenters. Again in 1828 there were costly repairs to the milldam and water wheel. Freshets were not the only problem. At least once the wheel was damaged by winter ice.[16] Nor was factory machinery foolproof.

The 1821 valuation noted the cotton machinery was worth $4100 in December 1819—"since then we have paid $200 for repairs for the same."[17] Millwright George Batty took 43 days to repair the factory machinery in 1828. Fire was also an ever present danger to textile mills. Clifton was fortunate that a fire in 1827 was confined to the factory roof.[18]

Neither cotton nor wool was in plentiful local supply. County residents came to the factory to get their wool carded, made into blankets, and to get their handwoven cloth fulled. While the factory was able to purchase much of its wool locally, it was in very small lots (under 20 lbs.). About a quarter of the wool purchased by the factory from 1822 to 1826 came from Baltimore. Since the factory's major product, flannel, was sold largely in Baltimore, this created the situation of purchasing raw wool in Baltimore, shipping it to St. Mary's for processing, then shipping it back to Baltimore to be sold on commission. The major merchant house handling the flannel was also the source of the Baltimore wool, and thus made a profit on both ends of the transaction.[19]

The situation with cotton supplies was even more revealing. It is possible that Clifton's partners hoped to get an adequate local supply of cotton, for cotton had long been a common garden crop in St. Mary's. But the climate in St. Mary's is only marginally suited to cotton, and the factory was able to purchase only very small amounts locally, in seed, and always at prices that were equal to or higher than southern cotton by way of Baltimore. Most of the factory's cotton came from South Carolina or Georgia, shipped by the Baltimore firms of Hopkins & Moore and Howard & Jackson. Prices for this southern cotton fluctuated widely. It is likely that high prices (30¢ per pound on the New Orleans market, for example) were the reason work was being curtailed for lack of cotton in 1817. Prices fell following the Panic of 1819, and in 1822 the factory was purchasing already ginned South Carolina cotton, via Baltimore, for 11 to 13¢. Since the local cotton was 16¢ it is little wonder that southern cotton was preferred. The situation had greatly altered by 1825, as southern prices rose to 23¢ while local prices remained the same; thus in 1826 the factory made its largest purchase of local cotton—some 4721 pounds. The major source of supply, however, was northern Virginia, particularly Westmoreland County. Here planters were experimenting with cotton as a staple crop to replace tobacco, with the enthusiastic encouragement of the *American Farmer*. In 1828, when Clifton made its largest purchase, of 36,667 pounds, all came from northern Virginia. Like so many small American textile mills, Clifton's partners searched for a supply of cotton that was stable in price, and thus were forced to frequently change the source of that supply.[20]

Wages for employees were never a problem *per se*. Beginning in 1811 the firm started apprenticing young boys in the "art of carding, spinning and weaving." In all seven boys were apprenticed to the factory between 1811 and 1815. The factory listed its employees in 1820 as two men, six women, and eight children, with a total of $1,200 wages paid. The women factory hands made 16 ⅔¢ a day. The 1840 census showed eight people employed in the cotton factory, while the 1850 census showed two men at $8 a month and nine women at $6.50 a month. Since most of the employees rented housing from the factory, and made purchases of meal from the factory mill, management received back at least a portion of the wages paid out.[21]

Managerial costs were another matter. Peter Gough had a verbal contract which gave him $500 a year in salary as long as he lived at Clifton. While he paid $60 rent for his house and garden, he arranged to hire his slaves Clem and Leige to the factory, at $100 hire and $50 board for Clem and $50 hire and $50 board for Leige. At various times he also hired other slaves to the factory or to craftsmen. He charged the factory with $80 board for himself. In addition he employed a succession of managers who were supposedly experts in cotton or woolen manufacture.[22]

Even in the 1820s there was still very little information available to the entrepreneur who was not familiar with the tech-

nical aspects of textile production. Not until the late 1820s and early 1830s was published information based on experience available to guide the fledgling industrialist. Gough had commercial experience as a shipmaster and storekeeper, but apparently lacked knowledge of textile production. Thus he was forced to rely on others who supposedly did have practical experience. Where Clifton's managers had gained their experience, and the extent of their practical knowledge, is not known. By the 1820s there were enough larger textile mills in Maryland to have produced a supply of young men eager to try their hand at management. To lure experienced managers to St. Mary's they were offered part of the firm's profits, plus wages and board. Joseph and Thomas White managed the cotton spinning business from 1817 to 1818 for $624 plus half the net profits. Between 1820 and 1825 John Walton managed first the entire factory, then the woolen business only for $100 a year. Joseph Hyde's managerial salary for the cotton factory was $8 a week plus a commission on sales in 1822, while James Saunders's salary for wool management was $130 a year. This steady parade of woolen and cotton managers into and out of Clifton attested to the difficulty of securing and retaining experienced men.[23]

When William Harworth of Philadelphia became general superintendent in December 1825 he began to analyze the factory's problems, and traveled frequently to Baltimore, Ellicott's Mills, and Philadelphia to study successful operations there as well as to ascertain the market. In a long letter to Peter Gough in 1826 he outlined Clifton's problems. Heading the list was a chronic shortage of ready cash. The woolen business was practically halted, and would demand considerable attention before it could become profitable. Wages had doubled, and while local wool was not offered, there was no money with which to purchase it if there were any. The woolen business, with the exception of the carding operation, had been suspended prior to 1820. Before the suspension some wool had been manufactured into "coarse cloth of cheap colour" on a piecework basis. Ann Tea rented a loom at $15 a year to do specialty weaving. After resumption of operations in 1823 Clifton began to manufacture and sell flannel, linsey–woolsey, and drab cloth. By 1825 some 2125 yards of flannel worth $610 were sold by Tiffany Wyman & Co. of Baltimore. The next year the operation made $1307 on sales of cloth and carding, but expenses of $1416 made for a $9 loss. From 1827 to 1829 Clifton averaged a $97 per year "profit." But in the last two years unsold inventory was more than double actual sales. The woolen factory closed most of its operations in 1829, although it continued to accept wool for carding through 1831.[24]

The story of the cotton operation was similar. In 1820 Clifton had only half its spindles in operation and reported "sale of Cotton yarn has declined very much within these two or three years. Even at reductions in prices of nearly 50 per cent from former prices of yarn, as the hand labour is about the same as formerly. The cotton spinning is very poor at present."[25] The market for Clifton's yarn covered both sides of the Potomac as far up as Alexandria, where it was sold on a commission basis in general stores. Some also went to Baltimore, whose cotton mills were Clifton's major competition: "if the Union Company of Balto. sells their yarn lower than the above prices, a deduction shall be made on this bill to suit their prices."[26] After 1823 Baltimore became Clifton's major market for yarn. Much of this related to credit and cash flow. For example, from October 1824 to December 1825 some 3700 pounds of cotton yarn were sold by Howard & Jackson for $1184.44; they charged $59.42 as commission. During the same period Clifton purchased cotton and paper worth $1360.16. The Baltimore merchants, not Clifton, made the profit.[27]

Cash flow problems as well as adverse weather forced closings. Often the only way to get raw cotton was to exchange it for yarn. In 1826 the factory was in operation only seven months out of twelve. Harworth reported "demand for Hides, Cotton & Wool & wages has put me to greater straits lately than I have ever experienced." Wages had not been paid for six weeks and he had

"not 6¢." Cotton yarn on hand was too coarse for the season, and an earlier lot had not yet been sold in Baltimore.[28] On June 24 he recorded "the cotton factory has only been at work 2 Days out the last 4 weeks [.] Also stopped about 2 weeks more out of the 7 weeks previous & principally for want of means to carry on with."[29] To add to Harworth's problems Baltimore yarn was undercutting Clifton's even in St. Mary's. Yet Harworth claimed he could make a profit, *if* he could get the firm on its feet.[30]

This proved to be impossible. Unsold inventory continued to mount. At the end of 1826 the books showed a "profit" of $763, but sales totaled only $1604, expenses were $2422, and the credit side of the ledger showed unsold inventory worth $1581. This situation continued through 1829, with the factory showing a profit only if unsold inventory was placed on the credit side. While turnover was not as poor as in some other factory operations, clearly the supply of yarn had outstripped demand. In addition Clifton owed a considerable amount to Howard & Jackson, their major cotton supplier. By February 1829 they demanded payment "by return mail." In 1833 Peter Gough reported the operations of the cotton factory were discontinued "in consequence of the depression in the price of the manufactured articles."[31]

In the meantime Harworth quit and returned to Philadelphia. In a deposition taken in 1829 he said he had arrived full of hope, now he felt he had lost money by coming to Clifton. He left Philadelphia because he considered his annual salary of $700 too low, but in the three years and four months at Clifton he had only made $1929. He claimed he had spent considerable time in improving manufacturing procedures, for which he had never received adequate compensation.[32]

The tannery at Clifton opened about 1818, and although secondary to textile production, received a sizable part of the factory's capital. Tanning is an ancient and time consuming process. When hides arrived at the tannery they were scraped clean, or "fleshed," on a broad fleshing beam, soaked in a solution of lime and water for three to four days to aid in removing the hairs, then placed in a series of tanning solutions, where they might remain for up to six months, depending on the weight of leather to be produced, fine quality requiring more time than coarse. Tannin was obtained from oak bark, chopped fine and mixed in vats with water. Once the leather was removed from the tanning vats it was dried, made smooth and given a finish by "currying," and finally dyed. Clifton's tannery initially contained a bark mill house for grinding the oak bark, a beam house, four handling and twelve laying away vats, and a currying shop. The total value of the tannery in 1821 was $1989, with a leather inventory worth $2377. The operation expanded, and in 1828 there were 29 vats and 240 troughs in use; but the equipment was valued by appraisers at only $540. When advertised for sale in 1834 the tannery included a 60 foot tan house, tanyard, two iron tan mills, and a tan mill house, with all necessary equipment. By 1840, however, the tannery's capital value was only $64, and it had disappeared by the 1850 census.[33]

The tannery did not seem to have the same type of supply problems as the textile operation. Factory account books showed the tannery purchased raw materials—hides, bark and tallow—locally. Some items, like imported Spanish hides, came from Baltimore, principally from William Jenkins and Sons, who also handled sales for the tannery in Baltimore. Leather and some finished items such as buttons and shoes were sold at Clifton's store, or on a commission basis by county storekeepers.[34]

The tannery's first manager was Thomas F. Ward of Prince Georges County, whose 1818 contract called for him to receive an equal share of the net profits. He ran the tanyard until 1820, then moved to Leonardtown to keep store. In 1821 he received $483.67 as his 5 per cent commission on sales. His successors apparently worked on a flat salary. Good managers must have been hard to find, for in 1825 the factory advertised for a manager in the Baltimore *American*. No one replied, and local carpenter William Combs was hired at $100 a year. In 1827 he sued for unpaid wages as tanner

and carpenter. The last manager was Abraham Wilhelm, who in 1830 leased the tannery along with a house and lot, for $130 a year. He set up with stock purchased from the estate of Stephen Milburn, who had run a tannery and store at Indian Bridge. The tannery also employed laborers at from $12 to $16 per month for skilled tanners, and $1.80 to $3 a month for free Negroes and slaves.[35]

A close examination of the tannery's books revealed the operation was beset with problems. In 1826, for example, the tannery spent $416 for labor and $519 for materials, and had sales totaling $1027. But they carried over an inventory of unsold leather worth $1098 into the next year. In 1828 sales amounted to $402, unsold inventory was $1596. Comments on the books going back as far as 1820, when Ward was given a 50 percent commission on sales of old leather, suggest inventory was hard to move, particularly when old. In 1827 leather left over from the previous year could only be sold for a "very reduced price." In a long letter to owner Peter Gough, the factory's general manager outlined some of the problems facing the tannery. Bark was expensive except for the less desirable red oak. The price of Spanish bark was particularly high and if Clifton could not buy, it would be sent to Baltimore. There was a severe cash flow problem which forced the factory to sell leather for cash in Baltimore at a greatly reduced price. Sales declined while inventory built up, indicating that there was insufficient local demand for the heavy leathers that Clifton's tannery produced. Possibly lack of skilled labor, or pressure to produce an immediate profit, precluded attempts to produce a finer quality product. Clifton's managers were apparently unable to accurately gauge local demand sufficiently far in advance, and their competitors in the Baltimore market could obviously produce a wider variety of leathers for less. No business can long survive with much of its capital tied up in unsold inventory. That the three tanneries reported in the 1840 census only produced $100 worth of leather suggests tanning was one rural industry unsuited to the market conditions in St. Mary's.[36]

The only really profitable parts of Clifton's operations were the gristmill and the village rental property. The mill and its equipment, including two pairs of four-foot Burr millstones, was valued at $1342 in 1821. In 1813 it had obtained a license from Oliver Evans to use his patent milling system, with the restriction that the mill do county, not merchant, work. Clifton's mill operated on the principle of a "toll" or percentage of the grain ground at the mill in lieu of a flat rate, and made its profits on the sale of flour and meal. Between 1826 and 1829 sales of flour and meal amounted to $1888.74 and expenses to $691.25, making a profit of $1197.49. The miller's wages in 1826 were $67, about a tenth of the mill's gross receipts. But the value of meal sold went from $723 in 1826 to $282 in 1829, as disagreement between the partners and a decline in corn prices took their toll.[37]

The gristmill continued in operation after the factory was sold in 1834. The 1850 census showed the gristmill, worth $2000, producing 150 bushels of flour and 1125 bushels of meal worth $825 annually. The single employee was paid $8 per month. In 1860 the mill was producing 10,150 bushels of flour and meal, and employed two men at a wage of $30 a month. One of the largest mills in the county, it ceased operation in 1959 on the death of its owner.[38]

A considerable portion of Clifton's capital was in rental property. In 1821 the houses, tavern, and shops were a fifth of the factory's total value. With most of the property rented, the factory could realize as much as $380 per year, a 6 percent return on its initial investment. But, like the rest of the operation, the rental property was beset with problems of underutilization, combined with costly repairs and such unexpected hazards as the fire which destroyed the smith's shop and its contents in 1828, making it a total loss. As rents were, after all, linked with the factory's general economic health, the decline in the late 1820s is apparent.[39]

Establishing Clifton Factory in close proximity to Great Mills and Indian Bridge created an enclave of craftsmen and indus-

trial workers. Nearly half those engaged in manufacturing in the Second District in 1820 were at Clifton, but that proportion declined to less than 20 percent by 1840. While the presence of Clifton stimulated growth before 1829, even attracting skilled craftsmen to St. Mary's, the subsequent lawsuit and depressed conditions in textiles in the late 1820s led to a general decline in the population of craftsmen. As long as the factory was in full operation and expanding its building program, it provided employment for local carpenters, masons, sawers, ditchers, and general laborers. Many of these laborers were free blacks as well as white residents of the vicinity. While their wages of 30 to 32¢ a day were under the prevailing agricultural scale of 37¢, work was available at periods when general farm work was not.[40]

Male agricultural workers did not seek work within the cotton or woolen factories. It is possible that they viewed textile work as closely akin to the home spinning and weaving girls and women were accustomed to do. Clifton's machinery also did not require skilled technicians, for while mules needed highly skilled operatives, usually men, trostles could be operated by unskilled women. The low wages of 16⅔¢ per day, and the uncertain nature of employment likely discouraged all but widows and children from seeking factory work. Between 1811 and 1814 Clifton apprenticed six boys to learn carding, spinning, and weaving, but by 1817 the factory work was clearly being done by women and young girls. Accounts in 1817 and 1818 showed four girls employed at $1 a week plus $35 a year board, which was paid by the factory to a number of widows who were also factory tenants. By 1820 these widows and their children were working in the factory. To understand the finances of these industrial workers it was necessary to reconstruct their families, for it was obvious from the repetition of names that whole families worked for Clifton Factory, a condition common in the textile industry. Of 49 men, women, and girls connected with the cotton and woolen operation, 26 were related to other individuals in the factory, and five others were related to craftsmen who resided in the vicinity. After 1820 the factory only paid board for skilled craftsmen who lived there while engaged in construction work. Millworkers were tenants of the factory or boarded with other factory workers. They shopped at the factory store, making credit purchases against their wages. While the factory did not erect a church, it provided a Sunday school teacher. On a small scale Clifton resembled other company towns associated with textile production elsewhere in the country.[41]

Most of the textile workers were widows and their daughters. Nine of the 35 women and girls employed by Cifton from 1817 to 1832 were widowed heads of households. They were poor and struggled to make ends meet. Henrietta Brinn's husband was a tailor who died circa 1800, leaving her with five children to support. In 1818 Henrietta and her daughter Jane worked at Clifton. She rented the old tan house for $6 a year, and in 1818 received $35 a year to board Harriot Armsworthy. Mrs. Brinn apparently lost her boarder after 1820; neither her wages nor her daughter's were sufficient to support them and she received charity corn in 1822. Jane Evans, who also worked at the factory, paid $25 rent for her house. In 1824 she and her daughter were on poor relief at $30 a year. Catherine Norris and her daughter Matilda lived in Clifton from 1820 to 1831. Her rent varied from $12 a year in 1820 to $20 in 1826. That year they made $50 between them. Although they had no taxable property, their earning power appeared to have been greater than those factory workers who received charity. Since Mrs. Norris rented a miniature farm perhaps she was able to grow her own food and sell a surplus. Susan Flower and her daughter Jane also managed on the low factory wage, as their rent was consistently $12 a year. Susan married shoemaker Benedict Drury in 1823, and the family's combined income enabled them to rent a better house as well as the shoe shop. Benjamin Goldsberry's whole family appeared to have been working in the cotton factory in 1823, no doubt going far in contributing to his $20 rent.[42]

Tannery workers were mostly single men, 14 were known to have been employed

between 1819 and 1828. Of these six were blacks, three free and three slave. While the tannery managers remained in St. Mary's and acquired some property, most of the rest, journeymen tanners, did not. They were tenants who lacked property and seldom stayed long enough to acquire it. The tannery lured skilled workmen into the county, but once there they did not always find the opportunity they sought. Joseph H. Thompson and Henry L. Palmer arrived at Clifton in 1826. Thompson was still in St. Mary's in 1850, working as a shoemaker, but Palmer was gone in three years. The average length of employment at the tannery was two years, after which a man left the county, or changed to another occupation.[43]

Most of Clifton's tenants failed to remain long in the county, and few appeared in assessments. Only two, tavernkeepers John B. Dillihay and Stephen Martin, had assessable property in 1821; none was able to acquire taxable assets while resident at Clifton. Three of the four who died leaving inventoried property had less than $100 in assets. Seamstress Mary Dyer left an estate worth $102—a table, seven chairs, a bed and linens, a mirror, and her personal clothing. Her nephew William Saunders, a tailor, left tailor's tools, clothing, a pistol, and a roan mare worth $61, in all a total estate of $65. Only saddler Thomas G. Dillihay left an estate worth over $1000, and most of his property consisted of his slave Kitty and her five children. Dillihay was not typical of Clifton tenants, for his brother John was a landowner, and had kept the tavern at Clifton in 1820 and 1821.[44]

The presence of the tannery attracted craftsmen in related fields to Clifton and its vicinity. The community supported three saddlers and four shoemakers, although there was a turnover among shoemakers and their apprentices, for seven men lived there at various times during the 1820s. In 1824 the factory built a wooden, single-storey shoemaker's shop, valued at $143 in 1828, and in 1834 the factory advertised a shoemaker's dwelling and shop. Benedict Drury, who paid $10 rent for the shop, had come to Clifton from Charles County, married a textile worker, and in 1825 took on an apprentice. He died sometime during the 1830s, and his widow was still living at Clifton in 1840. In 1830 three other shoemakers were working at Clifton, but one left in 1832, and another, free Negro William Brian, was in "indigent circumstances" in 1836. No saddlers could be found at Clifton after the death of Thomas C. Dillihay in 1830. The 1850 census showed only one saddler in the Second District, the county's other saddler was in the Third District.[45]

Thus, crafts in the vicinity of Clifton, while stimulated initially by the presence of the factory, appear to have been too closely connected with the factory's fortunes. The factory provided income for poor widows who might otherwise have been forced to seek charity, kept local craftsmen employed and thus caused them to remain longer, attracted a few craftsmen into St. Mary's, and provided some jobs for unskilled labor, white and black. But the heydey of Clifton was all too brief to develop a permanent middle class of craftsmen whose presence could convert a rural economy into an industrial one.

Clifton's partners and its managerial personnel had entered the enterprise with high hopes that were not realized. General manager William Harworth was not the only disappointed person. In 1827 carpenter John Peake sued for unpaid wages, William Combs sued for his carpenter's and tanner's wages, and James Saunders sued for wages promised for managing the woolen department. All won. More importantly, Peter Gough's partner, Archibald Binny, sued Gough in 1829, charging Gough cheated him. The suit was highly complex. Binny had not directly involved himself in the affairs of the firm, except to advance unspecified funds at various times since 1818. He was thoroughly dissatisfied with the returns on his investment. While Gough paid himself a salary, and considered money put back into equipment and buildings to his long-term advantage, Binny wished to realize a reliable and steady income from his share of the factory. These contradictory aims on the part of the partners would have been enough to create

problems, had Gough not actually been engaged in using partnership funds for his personal gains.[46]

Without making judgments about the propriety of Gough's actions, his bookkeeping left a great deal to be desired. Personal accounts were interspersed with company accounts, and before 1826 it is nearly impossible to ascertain true profit and loss from the operations. Gough made sure he was paid for his own services and those of his slaves, mixed personal and company travel, and generally ran the business as if it were his alone. Binny complained Gough and Harworth conspired to cheat him of profits, and spent money on unnecessary buildings and equipment. He requested an accounting and a court-ordered division of the property. Gough, as may be expected, denied it all, characterizing Binny as a silent partner, in "ignorance in the detail of the manner factoring establishment carried on."[47] He claimed that all purchases of land and improvements were absolutely necessary, and that Binny knew of and approved plowing profits back into buildings and machinery. He also pointed out Harworth was Binny's man, brought from Philadelphia on Binny's promise of profits. Gough characterized the suit as the result of "ignorance of the detail of the business carried on in the said factory, disappointed hopes, [and] the crafty and wiley suggestions of the enemies of the said Harworth and Gough."[48] Gough also argued that only an expansion of capacity would lead to a profit, and that required an even greater investment. The consistent underselling of their larger competitors in Baltimore suggests that Gough was correct.

All of Gough's former associates—William Hebb, Joseph White, John Walton, James Gilmore (who rented Clifton in the 1830s), and Dr. James D. Sutton (who owned part of Indian Bridge)—characterized Gough as an excellent manager in whom they had complete confidence. All admitted to verbal rather than written contracts, and to the agreement to plow profits into expanding the factory. With Gough's aims so different from those of Binny, it was a foregone conclusion that the partnership be dissolved, despite Gough's warning in 1833 that a sale "in the present depressed state of manufacturing and by one unfamiliar with its value would be insufficient to cover debts and be a great sacrifice."[49]

The audits of 1826 and 1829 showed an average annual "profit" on the total establishment in the range of $1600. As of 1829 an audit placed Gough's share of the factory at $7803, Binny's at $5074. In 1834 the factory was sold for $7068, with Binny the high bidder. Binny died in 1838. In 1840 the firm of Gough & Harris was operating the cotton factory, gristmill, and tannery. The 1850 census shows the cotton mill, worth $10,000, producing 46,000 yards of cotton yarn worth $7000. The woolen mill was back in operation processing flannel, but its annual value was only $218. This production was miniscule compared to the other Maryland textile mills. Clifton had the smallest number of employees in the state. Its 264 spindles can be compared with the statewide range of 960 to 5000, its two looms to a range of 12 to 140. By any measure Clifton was outmoded. Steamboats that stopped regularly at county landings put Clifton's products into direct competition with less expensive goods from Baltimore, thereby limiting and defining the market in Baltimore's terms. The only way to compete successfully was by scale economies, and Clifton lacked the cash and physical facilities to expand. The 1850 census was the last time Clifton's textile operations appeared in the census. Although the factory was incorporated in 1860, it had already ceased operation, never to be revived. Only the successor gristmill and store, with three ruined houses, remain as monuments to what Hebb, Gough & Sommerville dreamed would become a flourishing and profitable manufacturing community.[50]

Clifton's experiences appeared to have been repeated many times over. Current studies of small textile mills in New England and the Middle Atlantic suggest an almost universal pattern. Begun in rural environments by men with limited capital and limited experience, the factory could only survive in the absence of competition. While hoping to produce yarn and textiles for a wider market, Clifton in fact depended

on its locality for survival, not only in the sale of services like carding and fulling but in the supply of labor. Although the factory did not directly realize profits from the factory store, the ability to command rent depended on the amount of local patronage. More important for Clifton was the gristmill, one enterprise which flourished because it was relatively immune to outside competition and catered to strictly local demand. But Clifton could not survive in the limited St. Mary's market, and when it sold outside the county it encountered increasingly ruinous competition. Baltimore commission merchants supplied raw materials and credit as well as marketing Clifton's products. It was they who made the profits. For a period Clifton managed to survive despite competition even in its home markets. It increased the use of machines to replace more costly labor. It cut expenses by ceasing to pay board for its workers and by in effect bartering housing for wages. It diversified operations so profits would not depend entirely on cotton or woolen textiles. But without highly skilled labor and the best machinery Clifton could not produce more valuable quality goods. And without capital to expand Clifton could not cheaply manufacture the coarse products for which there was demand.

If Clifton's experiences are in fact representative, industries in plantation economies faced problems that transcended those peculiar to their region. Focus on textile mills by size rather than by region may help clarify questions about why the textile industry failed to flourish in plantation areas until the late nineteenth century. Such focus would also further knowledge about the relationship between urban areas and rural ones as sources of capital and as markets for the products of rural industries.

References

1. The two most current works discussing the relationship between the cost of labor and success in industrialization are Carville Earle and Ronald Hoffman, "The Foundation of the Modern Economy: Agriculture and the Costs of Labor in the United States and England, 1800–60," *American Historical Review* (1980), 1055–1094, and Gavin Wright, "Cheap Labor and Southern Textiles before 1880," *Journal of Economic History*, 39 (1979), 655–80. Julius Rubin, "Urban Growth and Development," in David T. Gilchrist (ed.). *The Growth of The Seaport Cities, 1790–1825* (Charlottesville, 1967), 3–21 discusses the effect of northern manufactured goods on southern crafts and attempts at industrialization.
2. Tench Cox, *A Statement of the Arts and Manufactures of the United States for the Year 1810* (Philadelphia, 1814) lists textile "factories" in Kentucky (15), Tennessee (2), Georgia (1) and Mississippi (22) as well as spindles in operation in Virginia, North Carolina and South Carolina. These statistics must be used with caution, for instance Mississippi's 22 "factories" with 807 spindles suggests cottage, not industrial spinning. Examples of the similarity between large gristmills and small textile mills in the Maryland area are Ely's Mill, a textile mill founded c. 1810 but abandoned by the 1830s as too small; when it was advertised for sale it was offered as a gristmill. Rockland, a large gristmill on the Falls Road near Baltimore had a factory village of 15 buildings. See John W. McGrain, *Pig Iron and Cotton Duck, Iron and Textile Villages in Baltimore County* (Towson: Baltimore County Public Library, forthcoming).
3. One of the best recent studies of the textile industry outside of New England is Anthony F.C. Wallace, *Rockdale: The Growth of an American Village in the Early Industrial Revolution* (New York, 1978). Most of the work done on the textile industry in the ante-bellum south focuses on the state level, for example the work of Richard W. Griffin on North and South Carolina, Georgia, and Maryland. "An Origin of the Industrial Revolution in Maryland: The Textile Industry, 1789–1826," *Maryland Historical Magazine* 61(1966), 24–36, details the growth of major factories but does not make comparisons. There is work in progress at the Regional Economic History Research Center, Eleutherian Mills-Hagley Foundation in Delaware which focuses on small mills in an attempt to see a pattern in their development. The most promising is that of J.W. Lozier. See J.W. Lozier, "The Forgotten Industry: Small and Medium Sized Cotton Mills South of Boston," *Working Papers from the Regional Economic History Research Center*, 2 (1979), 101–24, Betsy Bahr, "The Antietam Woolen Manufacturing Company: A Case Study in American Industrial Beginnings" and J.W. Lozier, "Rural Textile Mill Communities and the Transition to Industrialism in America, 1800–1840," *Working Papers* 4 (1981), 27–46, 78–95.
4. William R. Bagnall, *The Textile Industries of the United States*, I, 1639–1810 (Cambridge, 1893), John L. Bishop, *History of American Manufacturers* (Philadelphia, 1861–68) and Victor C. Clark, *History of Manufactures in the United States*, 1607–1860 (New York, 1929). See particularly Bishop, v. 2, 399–400 and Clark, 450–53. Clark gives the ratio of spindles to looms as 26 to one in 1827 and 37 to one in 1830 (452). Earle and Hoffman note that in an earlier period the ratio

was much less—in the early 1820s from 8 to one to 21 to one ("The Foundation of the Modern Economy," 1088–89. Clark states that by 1836 the average new mill had 5000–6000 spindles (452). He also notes that the southern yarn trade was controlled by small local mills producing for handloom weavers well into the 1830s (556). In 1820 approximately 30% of the textile mills reporting had less than 400 spindles. More than half of these small mills were located in New England. Yarn producers (except where they also were producing cloth) were usually operating spindles in the range of 100 to 500, the exception being Maryland yarn producers, all of which operated with more than 1000 spindles. The 1820 manufacturing census must be used with caution regarding regional comparisons, for the data from Virginia south is very incomplete (*Digest of Accounts of Manufacturing Establishments in the United States and their Manufactures* (Washington, 1823). The 1810 figures are taken from Cox, *op. cit.* For 1840 see *Compendium of the Enumeration of the Inhabitants and Statistics of the United States* (Washington, 1841).

5. For population figures see John T. Scharf, *History of Maryland*, III (Philadelphia, 1879, reprint Hatboro, Pa., 1967) 780–81. A fuller discussion of migration and county population loss can be found in Bayly E. Marks, "The Rage for Kentucky, Emigration from St. Mary's County, 1790–1810," in Robert D. Mitchell and Edward K. Mueller, eds. *Geographical Perspectives on Maryland's Past* (College Park, 1979), 108–28. For the timing and effects of the transition to wheat see Bayly E. Marks, "Economics and Society in a Staple Plantation System, St. Mary's County, Maryland 1790–1840" PhD dissertation, University of Maryland, 1979, 133–52.
6. The affairs of Clifton Factory are detailed in a 1829 Chancery suit—Archibald Binny vs. Peter Gough and William Harworth (Chancery 6648, Maryland Hall of Records). The account books of the firm—Day Books 1817–1828, 1825–1827, and 1831–1832, Ledger D, 1826–1829, and Carding Books 1815–1816, 1828–1830 are in Private Accounts in Chancery. Unless otherwise noted all St. Mary's County records are located at the Maryland Hall of Records. A single volume of Clifton accounts, a Day Book, 1827–1829, is MS 1688, Maryland Historical Society, Baltimore, (hereinafter referred to as MHS).
7. For a description of Guither and Tarlton's Great Mill see deeds from Richard Gardiner to Robert Hager, August 1, 1751, Robert Hager to William Black, December 4, 1755, and a grant from Lord Baltimore to William Guither, October 5, 1769 in Chancery 6648. For Indian Bridge see the valuation of Stephen Milburn, 1832 in St. Mary's County Valuations, 1826–1841, St. Mary's County Courthouse, Leonardtown. An account of Clifton's operations after 1840 can be found in Regina Combs Hammett, "The Cecils and Their Mill," *Chronicles of St. Mary's*, 21 (1973), 1–8 and *History of St. Mary's County* (Ridge, Md., 1977), 162–65. Textile mills needed a fall of 10 to 15 feet (Wallace, *Rockdale*, 127). In 1880 the census recorded the fall at Clifton as 15 feet (Tenth Census–Manufacturers–Maryland, 1880, Maryland State Library, Annapolis).
8. William Harworth, in a letter to Peter Gough, June 17, 1826, discussed the effects raising the milldam at Guither and Tarlton's site would have on Clifton (Chancery 6648). The fullest account of Indian Bridge Mill can be found in Regina Combs Hammett, "Indian Bridge Mill," *Chronicles of St. Mary's*, 20 (1972), 218–24. The first mention of the sawmill is in St. Mary's Assessments, 1804. Peter Gough published his autobiography as *A Refutation of Sundry Written Charges made by the Rev. Ravaud Kearney of the Protestant Episcopal Church against Peter Gough* (Baltimore, 1828), 37ff. William Kilty, *The Laws of Maryland 1776–1818, revised and collected under the authority of the legislature*, (Annapolis, [1820]), 1809 Resolutions 7–12.
9. For Binny's obituary see Margaret K. Fresco, *Marriages and Deaths, St. Mary's County, Maryland, 1634–1900* (p p.), 338. Peter Gough, *A Refutation*, 37–38, and *Answer to Charges*, filed October 1829, December 1832 (Chancery 6648). Details of the factory's components can be found in St. Mary's County Assessments, 1813–1841, in valuations filed in 1821 and 1828 as part of the Chancery suit, and in an advertisement in the Baltimore *Patriot*, August 1834 in Chancery 6648.
10. For details concerning county craftsmen see Marks, "Economics and Society," Table 7.8, 502. The 1830 census did not record categories of occupation, and all the returns for St. Mary's County are missing.
11. For the earliest sawmill see Elizabeth Aisquith to Stephen Milburn, March 10, 1791 in Chancery 6648. For Hebb's sawmill see St. Mary's County Assessments, 1804–1811. St. Mary's County Alienations and Transfers, 1786–1829 show the sale of this mill, on My Lords Run, to Thomas Gough in 1810, and then the same by Gough to Hebb, Gough & Somerville. The factory buildings appeared in St. Mary's County Assessments from 1813–1841, 1842. See also Day Books, 1817–1828, 1825–1827, Private Accounts in Chancery, valuations of 1821 and 1828, and the advertisement in the Baltimore *Patriot* in Chancery 6648. Joseph Mobberly noted the sawmill in his Journal VI, 3, Georgetown University Archives.
12. William Harworth to Peter Gough, May 24, 1826, Chancery 6648. An excellent description of cotton textile production can be found in Wallace, *Rockdale*, 134–158. The author is further indebted to John W. McGrain of Towson, Maryland for the descriptions of textile production found in *Pig Iron and Cotton Duck*.
13. Descriptions of factory equipment come from the 1821 and 1828 valuations and the 1834 advertisement in the Baltimore *Patriot*, Chancery 6648. The Census of Manufacturing Establishments–1820–Maryland, National Archives records the factory's equipment as follows: cotton gin of 20 saws, a stretcher or blowing machine, four carding engines, a four headed drawing frame, a 14 can

roving frame, three throstles with a total of 264 spindles, one double and one single reel, one lapping shoe & pin, one press for bundling cotton hanks, two fly shuttle cotton looms & gear, one pair of swifts, and one bobbin wheel. Only 168 spindles were in operation then, and the factory was producing only cotton yarn.

14. *Ibid.* The woolen department recorded two carding engines, one picker with two frames, a Billy and a Jenny of 50 to 60 spindles, a cut reel of 15 hanks, a warping mill, a spool frame and wheel, three looms, one fulling mill, one graining board, two dye kettles, one shearing machine, and one hot press.
15. Joseph Mobberly, Journal VI, 3, Georgetown University Archives.
16. For a report on a lawsuit involving Indian Bridge see Benjamin Tippett, Survey Book II. The destruction of Watts Mill is recorded in Tippett, *Ibid.*, f. 226, and in Minutes of the Commissioners of the Tax, 1815–1821. Day Book, 1817–1828, Private Accounts in Chancery, details the repairs.
17. 1821 Valuation, Chancery 6648.
18. Day Book, 1827–1829, MS 1688, MHS.
19. Carding Book, 1815–1816, Day Book, 1817–1828, Ledger D, 1826–1829, Private Accounts in Chancery. Bills from Tiffany Wyman & Co., September 10, December 10, 1825, Chancery 6648.
20. Cotton prices and supplies are discussed in Lewis C. Gray, *History of Agriculture in the Southern United States to 1860*, II (Gloucester, 1958) 696–698. For attempts to grow cotton in Maryland and Virginia see *American Farmer* 7 (1825), 139, 299, 308, 317 (16¢ per pound price). Volume 9 (1827), 7 lists prices in Dorchester County and Northern Virginia at 11¢ per pound. For Clifton's problems in 1817 see P. Gough to A. Binny, September 16, 1817, Chancery 6648. Details of cotton purchases can be found in Day Book, 1817–1828, 1825–1827, Private Accounts in Chancery, and Day Book, 1827–1828, MS 1688, MHS.
21. St. Mary's County Indentures, 1809–1829. Two of the apprentices do not appear to have continued with the cotton business for both were in factory accounts as carpenters. Five remained in the cotton business until migrating from St. Mary's. One, James Armsworthy, appeared in the 1820 census with three in manufacturing in his household, and was that year responsible for the management of the wool operation. The Day Book, 1817–1828 showed total and individual wages paid, with the daily rate for 1823 and 1826. In 1826 wages were $38 a month (see also Day Book, 1825–1827, Private Accounts in Chancery. Additional information on employees and wages is in Census of Manufacturing Establishments–1820–Maryland, and U.S. Census, Manuscript Agricultural Schedules, 1840, National Archives, and Seventh Census–Manufacturers–Maryland, 1850, Maryland State Library.
22. Day Book, 1817–1828, Private Accounts in Chancery. See also William Hebb, Interrogatory, 1830, Chancery 6648.
23. The first American book on textile manufacturing was Zachariah Allen, *The science of mechanics, as applied to the present improvements in the useful arts in Europe, and in the United States of America* (Providence, 1829). Wallace, *Rockdale*, 114–23 discusses the problems of entering the textile industry in the 1820s. Peter Gough, *A Refutation*, 37. Information on managerial salaries can be found in Day Book, 1817–1828, Private Accounts in Chancery. An example of the practice of offering a proportion of earnings can be seen when the factory advertised for a wool carder in 1821, offering half the earnings of the cards, which were estimated at from $400 to $500 at 8¢ a pound. Board was not included, and would cost $100 per year (Baltimore *American*, July 2, 1821). George Towers, "Actions taken without A.B. consent," and Interrogatories of Joseph White, 1830, and John Walton, July 1834, Chancery 6648.
24. William Harworth to Peter Gough, May 24, 1826, Chancery 6648. Nothing is known of Harworth, as he does not appear in any Philadelphia city directories nor can he be found in any U.S. census index for Pennsylvania. However, most textile mills were outside the city, and names of nonhouseholders do not appear in the census before 1850. The Census of Manufacturing Establishments–1820–Maryland, National Archives, noted "In consequence of the excessive importation of european Cloths since the late war, we have been compelled to abandon the Woolen Manufacture of Cloth entirely . . . ." Carding Book, 1815–1816, Day Book, 1817–1828, Ledger D, 1826–1829, Carding Book, 1828–1820, Private Accounts in Chancery, and bill, December 10, 1825 from Tiffany Wyman & Co., Chancery 6648. Harworth noted in his May 24th letter that "flannel accumulates fast."
25. Census of Manufacturing Establishments–1820–Maryland, National Archives.
26. Day Book, 1817–1828, f. 87, Private Accounts in Chancery.
27. For example see December 1825 bill from Howard & Jackson, Chancery 6648.
28. William Harworth to Peter Gough, May 24, 1826, Chancery 6648.
29. Day Book, 1825–1827, entry for June 24, 1826, Private Accounts in Chancery. On June 13 Harworth wrote: "I accepted this price in consequence of Mr. T. saying he could buy in Baltimore for a less price which I knew was the case."
30. Entry for June 13, 1826, *Ibid.*
31. Deposition of Peter Gough, October 1833, Chancery 6648. Ledger D, 1826–1829, Private Accounts in Chancery. J. Howard to Peter Gough & Co., July 14, September 1828, February 24, 1829, Chancery 6648.
32. Deposition of William Harworth, May 1, 1829, Chancery 6648.
33. Tanning directions can be found in *American Farmer*, 7 (1825), 88. Valuations of 1821 and 1828, and advertisement in the Baltimore *Patriot*, August 1824, Chancery 6648.
34. Day Book, 1817–1828, Private Accounts in Chancery.
35. Contract between Thomas F. Ward and Peter Gough & Co., 1818 and Day Book, 1817–1828,

Chancery 6648 and Private Accounts in Chancery. William Combs appeared in St. Mary's County Assessments, 1821–1841. For Wilhelm's purchase of Milburn's stock see St. Mary's County Accounts of Sales, 1826–1830, St. Mary's County Courthouse, Leonardtown. Henry Palmer and Joseph H. Thompson both appeared in the 1817–1828 Day Book. Palmer was employed for $16 a month plus board, Thompson worked in the tanyard for $12 a month. Palmer's employment stretched from 1825–1828. Thompson, aged 61, appeared in the 1850 census.

36. Day Book, 1817–1828, Ledger D., 1826–1829, Private Accounts in Chancery. William Harworth to Peter Gough, May 24, 1826, Chancery 6648.
37. License, Oliver Evans to William Hebb, January 1813, Chancery 6648. See also valuations for 1821 and 1828, *loc. cit.* A full discussion of milling technology can be found in John W. McGrain, "Englehart Cruse and Baltimore's First Steam Mill," *Maryland Historical Magazine*, 71 (1976), 65–79. Peter Gough, *A Refutation*, 56–57.
38. Seventh Census—Manufacturers, Agriculture–Maryland, 1850 and Products of Industry–Maryland–year ending June 1860, Maryland State Library. Hammett, "The Cecils and Their Mill."
39. Valuations of 1821 and 1828, Chancery 6648. Ledger D, 1826–1829, Private Accounts in Chancery.
40. In 1820 there were 31 people engaged in manufacturing at or near Clifton, out of total of 68 in manufacturing in the Second District. In 1840 only 12 individuals, or 17% of those engaged in manufacturing in the Second District, can be identified as residents of Clifton.
41. For wages see Day Book, 1817–1828, Private Accounts in Chancery. Peter Gough, *A Refutation*, 38.
42. For Henrietta Brin (Brinn) see Day Book, 1817–1828, Private Accounts in Chancery. She appeared in the 1800 through 1820 censuses. John Brin was in the St. Mary's County Assessments, 1793–1796, with $56 worth of property. For Jane Evans see the 1820 census, Clifton Day Book, 1817–1828, *loc. cit.*, Kilty, *Laws*, 1824 ch. 188. She was the wife of Richard Evans, who died in 1822 with $110 in assessable property, and with an inventory worth $578 (St. Mary's County Wills, JJ 3, f. 301, Inventories, 1810–1814, f. 474). For Catherine Norris see Day Books, 1817–1828, 1825–1827, *loc. cit.* In the 1820 census she appeared with another woman, aged 10 to 16, and both were engaged in manufacturing. Matilda Norris's wages appeared through 1831 (Day Book, 1831–1832). Susan Flower appeared in the 1820 census with three other women in her household, all engaged in manufacturing. Her rent and wages appeared in the Day Book, 1817–1828, along with those of her daughter Jane. In 1823 Susan "Fowler" married Benedict Drury (St. Mary's County Marriages, 1794–1914). He took Cornelius Shermantine as an apprentice in 1825 (St. Mary's County Indentures, 1826–1908). His last rent at Clifton was in 1827, and in 1832 he appeared in the Third District with $71 in property. Drury disappeared from the assessments in 1836, and there was a Susan Drury in the Third District in the 1840 census, leading to the assumption that he died. Benjamin Goldsberry was in the 1820 census, but no one in his family was engaged in manufacturing. At that time his househould consisted of himself and six others (his wife and five children). In 1828 he rented Susan Flower's former dwelling, and Sarah, Elizabeth, Eleanor and Wilfred Goldsberry worked in the cotton factory (Day Book, 1817–1828, *loc. cit.*).
43. Day Book, 1817–1828, Private Accounts in Chancery.
44. St. Mary's County Assessments, 1821–1836. Martin was a tanner by trade, and rented the tavern in 1825 and 1826 (Day Book, 1817–1828, Private Accounts in Chancery). Both Dillihay and Martin appeared in the 1820 census. All of Martin's household were engaged in agriculture, while Dillihay's household of six men, two women and six slaves recorded two in commerce, and six in manufacturing, including his brother Thomas G. Dillihay. Mary Dyer appeared in the 1820 census with three out of her househould of four men, herself, and a slave engaged in manufacturing. Her rents are in the 1817–1828 Day Book. She left all her property to her nephew William B. Saunders (St. Mary's County Wills, EJM 1, f. 208; Inventories, 1830–1832, f. 502). William Saunders took an apprentice in 1827 (St. Mary's County Indentures, 1826–1908), rented at Clifton in 1826 (Day Book, 1817–1828) and appeared in the assessments from 1832–1834. He died in 1833 (St. Mary's County Inventories, 1832–1835, f. 241). There was probably a kinship relation with James H. Saunders, who managed Clifton's woolen operations from 1826–1828. St. Mary's County's Inventories, 1830–1832, f. 85.
45. Information on the various tanners, shoemakers, and saddlers at Clifton in in Day Book, 1817–1828, Private Accounts in Chancery. Valuations of 1821 and 1828, advertisement in the Baltimore *Patriot*, August 1834, Chancery 6648. For Drury see note 42 above.
46. The suits of Peake, Combs and Saunders are entered in the Day Book, 1817–1828, Private Accounts in Chancery.
47. Peter Gough's answer to Binny's changes, filed October 1829 and December 1832, Chancery 6648. In his original complaint, filed in March 1829, Binny claimed Gough's bookkeeping was highly irregular. At least two individuals supported this, as well as the belief that Gough had in fact cheated Binny, even if it was not a conspiracy. Throughout the factory's books accountant Henry Delander noted irregularities. For example: "a well conducted business this must have been, can Mr. Gough give fair explanation of all those Extraordinary Entries in this Book." His main complaint was that Gough failed to keep profit and loss accounts of each enterprise, and that he mixed company and personal business in company books. In the 1829–1831 Carding Book, James Henry Saunders wrote: "Cheat not your partner for fear of shame / Give every man his rights and

that is / Just in God's sight." In the personal controversy between Gough and the Rev. Ravaud Kearney, the issue of Gough's relationship with Binny was published ([Ravaud Kearney], Veritas, *An appeal to the Candid of All Denominations in reply to One Peter Gough* (Baltimore, 1828).

48. Peter Gough's answer to Binny's charges, filed October 1829. In Binny's complaint he said he advanced money to the firm, but kept no record of the dates or amounts involved. One of his chief complaints was a lack of dividends from his investment. Gough was able to produce testimony that Binny's investments after 1816 were minimal, and that he had in fact been a silent partner.
49. Peter Gough, statement filed October 1833. Depositions of William Hebb, Joseph White, William Harworth, 1830, John Walton, James Gilmore, July 1834, and James D. Sutton, August 1834, Chancery 6648.
50. Ledger D., 1826–1829, Private Accounts in Chancery. Auditor's Report, 1829, Chancery 6648. Seventh Census—Manufacturers, Agriculture—Maryland, 1850 and Products of Industry—Maryland—year ending June 1860, Maryland State Library.

Maryland Inventors and Inventions 1830–1860

MARK WALSTON

THE COLLECTIVE CREATIVE SPIRIT OF early America has been endowed by later generations with an innate sense of inventiveness. Like Mark Twain's Connecticut Yankee, confronted with new and changing situations, the individual could draw upon this inherent ingenuity as a method of problem solving; he could fashion in his own machine shop the proper tool to do the job, and if the right tool had yet to be devised, he could "invent one—and do it as easy as rolling off a log." It is perhaps appropriate, then, for a country which prides itself in a native ingenuity to elevate the historic inventor and invention to a lofty position. McCormick's reaper (1834), Morse's telegraph (1840), Howe's sewing machine (1846), have all attained an almost mythical stature in our nation's history.

There is no denying the significance of the "landmark" inventions in the development of an American technology and social standard. They are, however, isolated inventions in a series of many which preceded and succeeded them. Some in this series of less popularized inventions had as great an impact upon the life of young America, although often of a more immediate or local nature. All grew out of a need; many never transcended the personal necessity prompting their creation and few imparted any measurable benefit to the inventor or society. But most inventions, when considered in their historical setting, are reflections of specific social, cultural, or technological needs.

Mr. Walston is Historian of the Maryland–National Capital Park and Planning Commission, Rockville. This article continues a list begun by G. Terry Sharrer, "Patents by Marylanders, 1790–1830," *Maryland Historical Magazine* 71(1976): 50–59.

The 870 inventions patented by Marylanders during the period 1830 to 1860, inclusive, may be arranged in three general categories based on the impulse behind their creation. First, there are those inventions which derived from a necessity encountered by the inventor during the course of his normal occupation. One would suspect that, as farming was the largest single occupation during the period, agriculture-related inventions would constitute the majority of patents issued to Marylanders. However, they account for only 16 percent of the total, perhaps indicative of the continuance of traditional methods and practices, or the tendency "down on the farm" towards unpatented, homemade inventions and modifications of tools and equipment. The second broad category would include those inventions which derived from an inventor's perception in the world around him of things which did not work as well as they could, or of a need for something entirely new, and through invention reduces his theoretical problem-solving to practice. These inventions range from daily-use domestic items to the more fantastic creations of animated imaginations. The third category may be referred to as "state of the art" inventions, in which the inventor of his own selects a particular field in which to work, studies everything that has previously been done in that field, and sets to work on the basis of that knowledge. Generally encompassing most industrial and technological inventions, the largest group of Maryland inventions in this category for this period are in the realm of railroading. Railroad patents alone account for nearly 12 percent of the total patents over the thirty year period. These inventors attended to solving problems affecting all aspects of early railroading, from modifi-

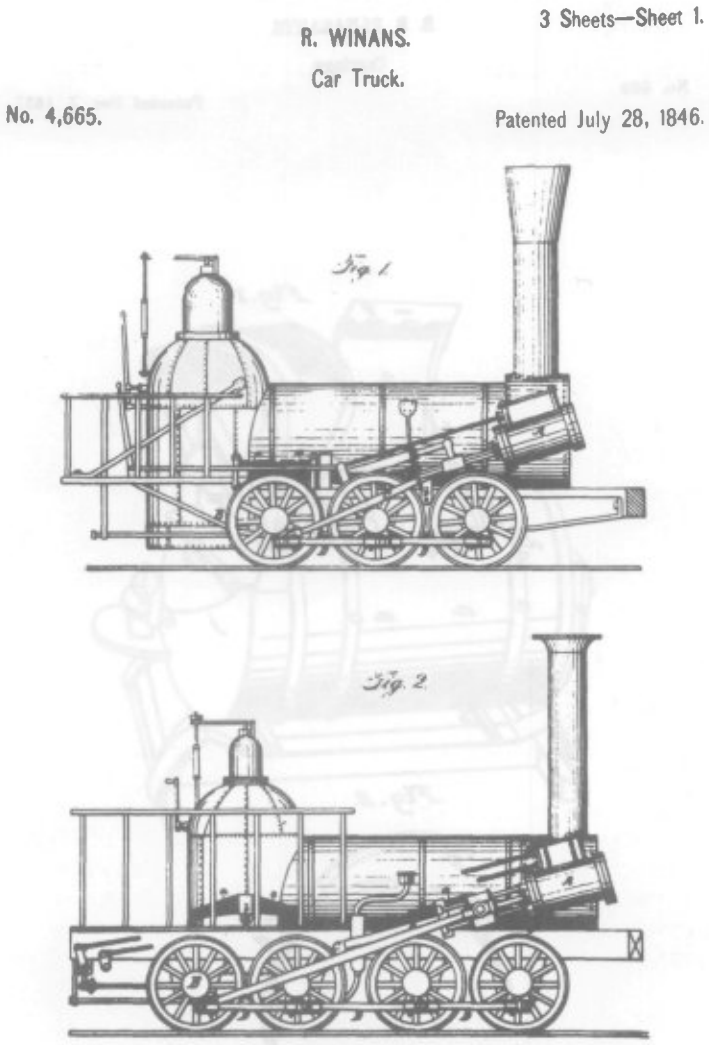

FIGURE 1.
Modifications of six-wheeled and eight-wheeled locomotive engines (Patent No. 4665, 28 July 1846) designed by Ross Winans, the most prolific of Maryland inventors during this period. (U. S. Patent Office)

cations of locomotive steam engines, to turning short curves on railways, to methods of preventing dust from entering car windows. Foremost among the railroad inventors was Ross Winans. A Baltimore founder, Winans was the most prolific of all Maryland inventors during the period, holding a total of 24 individual patents, and his series of railroad locomotive and car designs and improvements came to form an important chapter in the development of the American rail system.

While a great many inventions were, for any number of reasons, never marketed, some did in fact reach the manufacturing stage and proved to be advantageous to both the inventor and the community. The stove invented by John H. B. Latrobe (Patent No. 4744, 5 September 1846), popularly referred to as the "Baltimore Heater" and a precursor to the hot-air furnace, was in production until the early twentieth century. Most inventions, however, appear to have remained solely in the design stage, like Christian H. Eisenbrandt's "Coffin for use in case of doubtful death" (Patent No. 3335, 15 November 1843). The coffin contained a spring lock worked from within, which would open a door sufficiently heavy to overturn a shallowly dug grave.

The significance of many of the "useless" inventions lies not with the execution but

B. B. PLEASANTS.

Carriage.

No. 509 Patented Dec. 7. 1837.

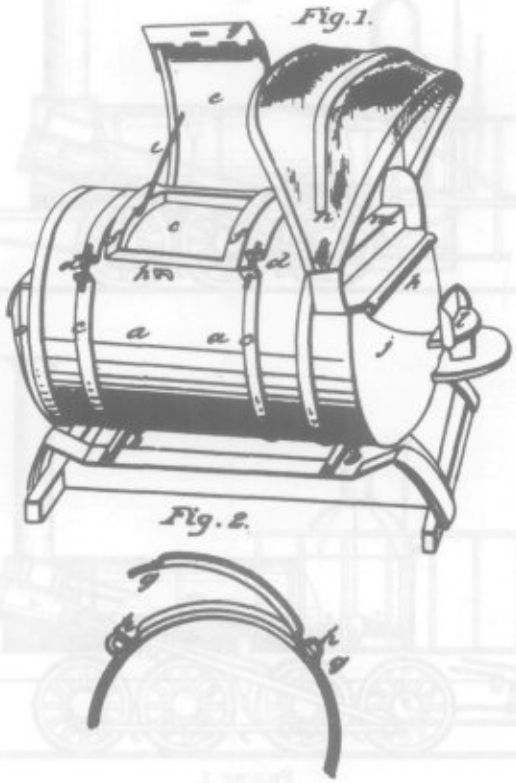

FIGURE 2.
Basil Pleasants' "Water-proof mail carriage," (Patent No. 509, 7 December 1837). The mail was loaded inside a water-tight barrel through a locking door cut into the top, thus protecting it from both rain and theft. (U. S. Patent Office)

with the intent; the significance resides in the impulse behind creation rather than the creation itself. Regardless of how ridiculous a contrivance it may seem, Eisenbrandt's coffin expresses the real fear and possible occurrence of accidental burial, a fear perhaps shared by a larger segment of society at that time, and his coffin is an earnest attempt to alleviate that condition through invention. Certainly not all Maryland inventions can be interpreted as barometers of the cultural setting in which created; some are no more than the happy flashes of peculiar minds. Most inventions, however, can be indicative of their particular historical setting, and as such the patent record becomes an important cultural document.

The first Federal patent act was signed into being by President Washington in 1790. Under the provisions of that act, a board consisting of the Secretary of State, Secretary of War, and the Attorney General was invested with the responsibilities of patent review and issuance. The inventor was required to submit a description, drawing, and, when possible, a model of the invention. Among other considerations, the

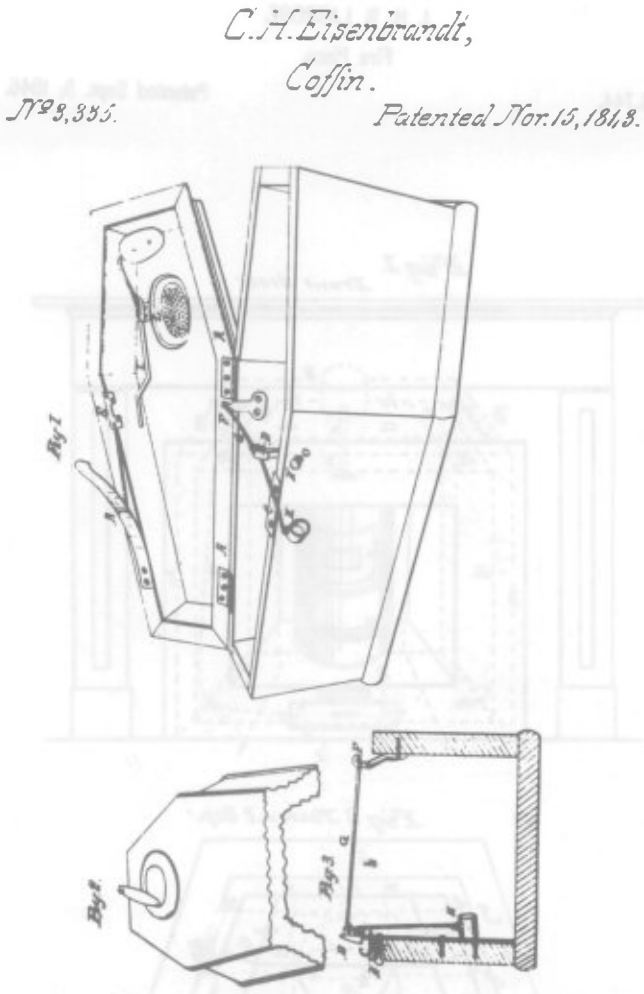

FIGURE 3.
Christian Eisenbrandt's "Coffin for use in case of doubtful death," (Patent No. 3335, 15 November 1843.) The coffin contained a spring lock worked from within, which could open a lid sufficiently heavy to overturn a shallowly dug grave. (U. S. Patent Office)

board was to determine, if able, whether the proposed invention was truly new rather than an insignificant modification of a previous patent. In its first years of existence, however, the three-member board found this application-review process too burdensome an addition to their other duties. In 1793, the law was changed, reducing the patent board to only one member, the Secretary of State. In addition, the issuance process was redesigned into what was in effect merely a registration system, under which patents were granted to applicants with the intent of leaving it to the courts to decide which inventions were in fact new.

The 1793 system which remained in force for the next 33 years, issuing unnumbered patents, was eventually deemed inadequate in its protection of the individual inventor's interests. In 1835, Senator John Ruggles of Maine, himself an inventor, initiated congressional reform action, resulting in the establishment of a new patent system. Under the act of 1836, the Patent Office, headed by a Commissioner of Patents, was made a separate bureau under the Department of State, and the former registration system was supplanted by the original examination system, by which appointed examiners reviewed each application for originality. Patents were for the first time as-

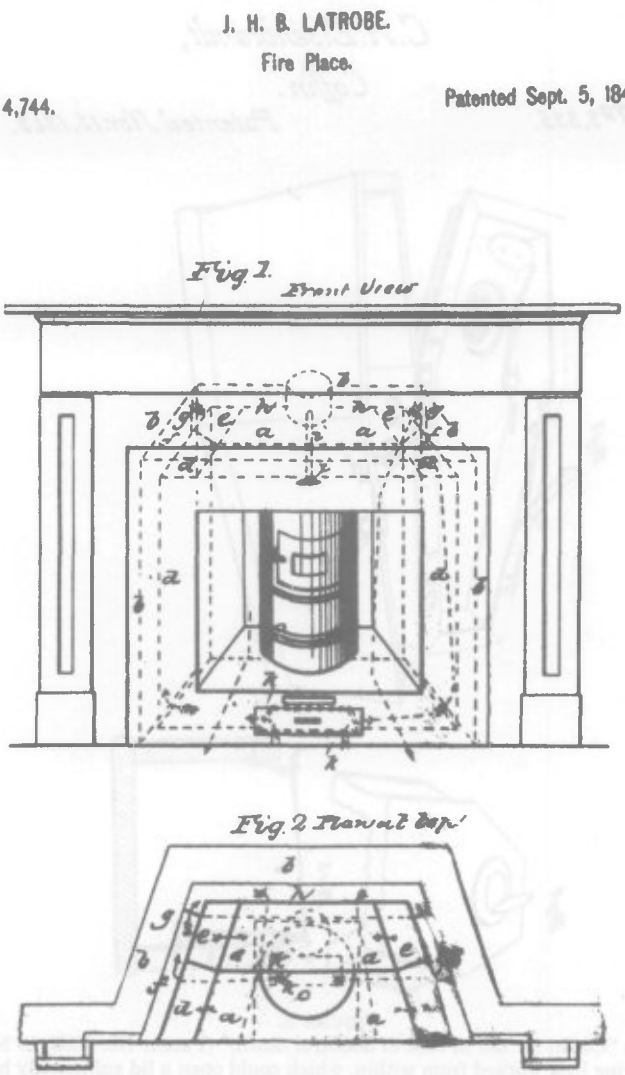

FIGURE 4.
Various models of John H. B. Latrobe's stove (Patent No. 4744, 5 September 1846) continued to be manufactured into the twentieth century. (U. S. Patent Office)

signed serial numbers, with Patent No. 1 issued 28 July 1836 to Senator Ruggles for an improved "locomotive steam engine for rail and other roads."

As a result of the reformed review system, the number of issued patents was reduced by half; in Maryland, the number of patents fell from 31 issued in 1836 under the old system, to 17 patents in 1837 under the new examination system.

Disastrous fires in December of 1836 and September of 1877 swept through the Patent Office records, destroying a large portion of the accumulated patent drawings and models. However, a significant number of patents filed by Marylanders do exist today, and are available to researchers. The following listing is intended to provide an index to patents issued to Marylanders for the period 1830 to 1860, inclusive. The abstract was compiled from the U.S. Patent Office yearbooks and from the *Subject Matter Index of Patents for Inventions Issued by the United States Patent Office from 1790 to 1873, Inclusive*, compiled and published under the direction of Commissioner of Patents M.D. Legget in 1874. All name spellings and residences are as appears.

UNITED STATES PATENTS BY MARYLANDERS, 1830—1860

Invention	*Inventor*	*Residence*	*Date*	*Number*
Addresses on newspapers, Machine for printing	N. Bowlus	Middletown	May 1, 1860	28059
Air engine, Compressed	W. C. Turnbull	Baltimore	April 17, 1860	27938
Air-heating furnace	J. Barker	Baltimore	July 7, 1846	4622
Air-heating furnace	J. Barker	Baltimore	Feb. 8, 1848	5436
Alarm lock	J. Ziegler	Baltimore	April 10, 1860	27856
Amalgamator	J. & E.W. Barker	Baltimore	Jan. 18, 1859	22616
Animals from railway, Apparatus for removing	I. Montgilion	Elk Ridge Landing	Feb. 13, 1849	6113
Anthracite and other fuel, Promoting combustion of	P. Davis	Baltimore	July 29, 1834	—
Artillery carriages, Wheel for flying	J. D. Murphy	Baltimore	April 3, 1860	27733
Auger, Earth-boring	G. Page	Baltimore	May 3, 1839	1140
Auxilliary engine to be used in supplying steam boilers with water, Manner of arranging the parts of	J. Cochrane	Baltimore	April 16, 1845	4003
Ax-making machine	I. W. Turne	Baltimore	Nov. 4, 1842	2841
Axletree	R. Haslup	Baltimore	Feb. 24, 1831	—
Balls or shot, Machine for manufacturing	L. Magers	Baltimore	Nov. 13, 1840	1855
Bark and grain, Mill for grinding	V. Birley	Frederick	July 11, 1842	2716
Barrel-carriage	W. Furley	Smithsburg	Oct. 20, 1849	6826
Barrel chamfering, beveling, and howling machine	S. Widerman	Elysville	April 23, 1842	2583
Bathing apparatus	W. G. Young	Baltimore	Dec. 16, 1845	4309
Bedstead	W. Gambel	Baltimore	Aug. 25, 1831	—
Bedstead, Cot	P. Williamson	Baltimore	Nov. 11, 1830	—
Bedstead, Invalid	S. Grantz	Beaver Creek	Jan. 3, 1860	26666
Blast furnace	I. Tyson, Jr.	Baltimore	April 18, 1834	—
Blast furnace for smelting metal	J. Barker	Baltimore	April 20, 1837	137
Blast furnace hearth	G. Poe	Elk Ridge Landing	June 23, 1838	804
Blower, locomotive steam engine	R. Winans	Baltimore	July 29, 1837	307
Blow-pipe for blast furnace	J. Barker	Baltimore	March 3, 1837	134
Blow-pipe, Furnace	J. Barker	Baltimore	Feb. 12, 1836	—
Boat and ark	T. Symington	Baltimore	July 22, 1833	—
Boat from its tackle, Detaching	S. F. Blunt	Baltimore	March 25, 1856	14489
Bolting-cloth to reel, Securing	G. M. Elliott	Hagerstown	March 19, 1834	—
Bonnet and hat pressing machine	C. Merritt	Baltimore	March 13, 1844	3477
Book and method of binding, Copy	W. Davison	Baltimore	Oct. 9, 1841	2286
Boot, Cork sole	W. L. McCauley	Baltimore	June 5, 1844	3615
Boot-jack	W. W. Cansler	Baltimore	Jan. 25, 1859	22700
Boot-jack	W. D. Young	Baltimore	Jan. 25, 1859	22766
Brick, Burning	D. & G. M. Blocher	Cumberland	June 5, 1855	12991
Brick-kiln	W. Linton	Baltimore	Jan. 20, 1852	8678

UNITED STATES PATENTS—*Continued*

Invention	*Inventor*	*Residence*	*Date*	*Number*
Brick-kiln	J. Ogle	Baltimore	May 9, 1848	5551
Brick-kiln	J. S. Speights	Baltimore	July 4, 1854	11234
Brick-machine	W. Beach and E. Lukens	Baltimore	May 22, 1841	2101
Brick-machine	L. Montgomery	Tunnel	July 8, 1843	3167
Brick-machine	F. H. Smith	Baltimore	Oct. 3, 1854	11753
Brick-machine	J. Willerd	Baltimore	Jan. 29, 1840	1484
Brick manufacture	T. James	Canton	June 1, 1858	20433
Brick-press	N. Sawyer	Baltimore	Sept. 27, 1844	3768
Brick-press	N. Sawyer	Baltimore	Dec. 4, 1847	5386
Brick-press	N. Sawyer	Baltimore	April 23, 1850	7309
Brick-press bridle	J. Willard	Baltimore	June 10, 1830	—
Bridge	A. Fink	Baltimore	May 9, 1854	10887
Bridge, Wooden or frame	S. H. Long	Baltimore	March 6, 1830	—
Bridge, Construction of	W. Bollman	Baltimore	Jan. 6, 1852	8624
Bridges, &c., Fastening and combining the truss-frames of	J. Price and J. T. Phillips	Golden	Feb. 23, 1841	1994
Broom clamp	S. Mason	Indian Springs	March 24, 1857	16877
Brooms, Machine for making	S. Rowe	Baltimore	Dec. 1, 1857	18770
Brush, Whitewash	D. W. Shaw and W. A. Megraw	Baltimore	June 1, 1858	20447
Bucket, Butter	J. H. Stimpson	Baltimore	Aug. 17, 1858	21220
Bullets, Machine for making hollow	R. Gornall	Baltimore	Dec. 14, 1858	22286
Burglar alarm	H. R. Robbins	Baltimore	Oct. 19, 1858	21849
Burglar alarm	W. D. Wright	Baltimore	March 2, 1858	19527
Burner, Vapor	E. H. Anderson	Easton	April 3, 1860	27676
Burner, Vapor	S. B. Hopkins and E. H. Anderson	Easton	April 3, 1860	27718
Butter-cooler	J. H. Stimpson	Baltimore	May 15, 1855	12879
Butter-cooler	J. H. Stimpson	Baltimore	July 13, 1859	20902
Cabin for steam and other vessels, Floating	W. R. Jackson	Baltimore	June 5, 1855	13006
Cakes, Cutting and panning	J. H. Shrote	Baltimore	Oct. 11, 1859	25767
Caldron	H. Newsham	Baltimore	Feb. 12, 1856	14271
Calipers, Transverse	W. J. Van Ness	Baltimore	Oct. 30, 1849	6841
Canal-boat, Steam	J. Elgar	Baltimore	Nov. 7, 1835	—
Canal-boats and other vessels, Method of unloading	W. Loughridge	Weverton	May 9, 1854	10891
Canal-boats from water, Arrangement of means for freeing	W. Loughridge	Weverton	July 11, 1854	11293
Canal-boats or sections thereof, Revolving cradle for unloading	J. Elgar and B. Hallowell	Baltimore and Alexandria, Va.	April 10, 1849	6303
Canal lock	W. W. Virdin	Havre de Grace	Jan. 20, 1852	8668
Canals and railways, Transportation on	J. Elgar	Baltimore	Nov. 7, 1835	—
Candle-making machine	J. Jones	Baltimore	Oct. 26, 1858	21882

Cane fiber for paper and other purposes, Treating	B. A. Lavender and H. Lowe	Baltimore	April 4, 1854	10722
Cannon, Breech-loading	J. H. Merrill	Baltimore	March 22, 1859	23306
Cannon, Breech-loading	J. H. Merrill	Baltimore	June 15, 1858	20608
Car and carriage axles and boxes, Railway	D. C. Force and F. Davis	Baltimore	Nov. 6, 1834	—
Car and carriage wheels, Chilling	P. Davis	Baltimore	July 29, 1834	—
Car and engine wheels, Constructing railway	J. Stimpson	Baltimore	Oct. 23, 1834	—
Car and locomotive-engine wheel	R. Winans	Baltimore	Nov. 19, 1833	—
Car axle, Railway	J. Montgomery	Baltimore	April 24, 1860	28004
Car brake, Automatic railway	W. R. Jackson	Baltimore	Sept. 8, 1857	18150
Car brake, Railway	H. Davis	Baltimore	Sept. 13, 1859	25392
Car brake, Railway	C. H. Eisenbrandt	Baltimore	May 25, 1858	20339
Car brake, Railway	H. C. Sides	Baltimore	July 12, 1843	3171
Car brake, Railway	W. F. Stewart	Patuxent Forge	Oct. 4, 1859	25708
Car brake, Railway	A. F. Toulmir	Ellicott's Mills	Nov. 29, 1859	26307
Car brakes, Graduating the tension of	W. Loughridge	Weverton	April 10, 1855	12685
Car coupling	S. M. Cochran	Baltimore	Jan. 1, 1851	7866
Car coupling, Railway	C. H. Eisenbrandt	Baltimore	May 24, 1859	24109
Car coupling, Railway	J. T. England	Baltimore	Dec. 4, 1855	13869
Car coupling, Railway	H. E. Loane	Baltimore	March 23, 1858	19705
Car doors, &c., Seal for	D. W. Long	Baltimore	July 14, 1857	17796
Car for transportation of coal, &c.	R. Winans	Baltimore	June 26, 1847	5175
Car-light	R. Cathcart	Baltimore	Oct. 9, 1860	30297
Car, Railway	J. Davis and W. Ashdown	Baltimore	March 4, 1836	—
Car, Railway	J. Elgar	Baltimore	Oct. 1, 1830	—
Car, Railway	I. Knight	Baltimore	April 28, 1836	—
Car, Railway	R. Winans	Baltimore	Oct. 1, 1834	—
Car, Safety railway	W. Kinkead	Elkton	Dec. 29, 1837	535
Car seat	W. M. Henderson	Baltimore	Aug. 16, 1859	25116
Car seat and couch, Railway	W. R. Jackson	Baltimore	April 12, 1859	23581
Car, Self-adapting railway	G. W. Cleveland	Baltimore	Oct. 14, 1835	—
Car, Self-guiding and accomodating locomotive	L. Clark	Baltimore	Sept. 28, 1831	—
Car-spring, Railway	J. Millholland	Baltimore	Sept. 23, 1843	3278
Car-spring, Railway	R. Winans	Baltimore	June 14, 1834	—
Car-wheel, Cast iron	T. Perkins and W. McMahon	Baltimore	April 10, 1843	3037
Car wheels, Casting	R. Poole	Baltimore	April 20, 1858	20022
Car wheels, Cooling	R. Poole	Baltimore	July 13, 1858	20924
Car wheels, Drilling and boring	D. Walker	Gunpowder	Dec. 28, 1832	—
Cars, Construction of railway	W. A. Davis	Baltimore	Oct. 5, 1838	963
Cars from being thrown from track, Machine for preventing engines and railway	A. L. Johnson	Baltimore	Nov. 1, 1859	25970
Cars, Furnace for railway	H. M. Hutchinson	Baltimore	March 13, 1860	27449
Cars, &c., Implement for sealing railway	F. W. A. Krause	Baltimore	Oct. 13, 1857	18400
Cars, locomotives, &c., Spring for railway	W. Duff	Baltimore	Jan. 9, 1841	1928

UNITED STATES PATENTS—*Continued*

Invention	*Inventor*	*Residence*	*Date*	*Number*
Cars, Method of preventing dust, &c., from entering the windows of railway	P. M. Pyfer	Baltimore	March 10, 1857	16806
Cars, Platform between railway	J. Newman	Baltimore	July 26, 1859	24885
Cars, Running-gear for railway	W. Nebinger	Sharpsburgh	Oct. 21, 1851	8451
Cars, Running-gear for railway	J. Stimpson	Baltimore	Oct. 23, 1834	—
Cars, &c., Seal for railway freight	H. D. Mears and W. Houlton, Jr.	Batlimore	July 14, 1857	17801
Cars, &c., Seal for railway freight	H. D. Mears and W. Houlton, Jr.	Baltimore	July 14, 1857	17802
Cars, Starting city-railway	G. P. Frick	Baltimore	June 7, 1859	24293
Cars, Unloading coal and other	A. Patrick	Alleghany Co.	Aug. 15, 1854	11530
Cars upon the track, Spiral wheel for replacing	R. F. R. Lewis	Annapolis	April 10, 1855	12684
Cars, Ventilating railway	W. H. Medcalfe	Baltimore	Jan. 22, 1856	14139
Carding and spinning machine, Yarn	M. Chase	Baltimore	March 23, 1842	2511
Carding engine	H. W. Gambrill and S. F. Burgee	Woodbury Mills	Sept. 1, 1855	18124
Carding engine	S. Wethered	Baltimore	Aug. 16, 1859	25153
Carding machine	H. W. Gambrill and S. F. Burgee	Woodbury Mills	Feb. 27, 1855	12469
Carriage and gig springs, Connecting	A. Davis	Easton	March 18, 1835	—
Carriage and wagon jack	W. N. Rowe	Sharpsburgh	Aug. 16, 1859	25141
Carriage and wheel, Railway	R. Grant	Baltimore	Nov. 3, 1838	999
Carriage axle	E. H. Green	Baltimore	June 13, 1854	11063
Carriage axle and box	F. Davis	Baltimore	Nov. 24, 1834	—
Carriage axletree, Railway and other wheeled	R. Winans	Baltimore	July 20, 1831	—
Carriage-brake	W. T. Welch, Jr.	Churchville	March 12, 1850	7177
Carriage, Locomotive	R. Winans	Baltimore	July 28, 1846	4665
Carriage, Locomotive	R. Winans	Baltimore	Oct. 14, 1846	4812
Carriage running gear	R. Murdoch	Baltimore	June 24, 1856	15189
Carriage running gear	R. Murdoch	Baltimore	May 19, 1857	17337
Carriage running gear	C. F. Verleger	Baltimore	Feb. 3, 1852	8711
Carriage spring guard	T. Winans	Baltimore	Feb. 16, 1858	19396
Carriage springs, Manner of applying	J. S. Tough	Baltimore	June 9, 1843	3126
Carriage, Water-proof mail	B. B. Pleasants	Brookeville	Dec. 7, 1837	509
Carriage wheel, Iron	J. D. Murphey	Baltimore	April 19, 1859	23695
Carriage wheel, Metallic	W. Beach	Baltimore	March 2, 1858	19478
Carriage wheels, Confining	C. Force	Baltimore	April 28, 1836	—
Carriage, Axle and thorough-box for	W. Slicer	Baltimore	July 5, 1837	255
Carriages, Mode of connecting and disconnecting railway	J. Stimpson	Baltimore	Dec. 10, 1840	1885
Cartridge	J. H. Ferguson	Baltimore	June 28, 1859	24548
Casting chilled plates	R. Poole	Baltimore	Aug. 2, 1859	24976
Castings, Machine for molding for metal	D. Brown	Baltimore	June 27, 1854	11191
Cement in making cistern reservoirs, &c., Mode of applying	T. Coyle	Baltimore	Aug. 16, 1837	358

Checks for preventing forgeries	J. D. Pope	Baltimore	March 8, 1834	—
Chimneys, Curing smoky	D. Bain	Baltimore	Feb. 5, 1833	—
Chimneys, Curing smokey back and hearth of	H. Pollock	Baltimore	March 11, 1834	—
Chocolate, Grinding	G. W. Waite	Baltimore	June 25, 1836	—
Chocolate ingredients, Heating	G. W. Waite	Baltimore	June 25, 1836	—
Chocolate, Molding	G. W. Waite	Baltimore	June 25, 1836	—
Churn	C. Murdock	Baltimore	Feb. 20, 1849	6133
Churn	D. Sherman and R. W. Fenwick	Uniontown and Washington, D.C.	July 31, 1860	29445
Churn	D. Smith	Emmetsburgh	April 21, 1831	—
Churn and washing machine	C. Otis	Finksburgh	June 12, 1835	—
Churn dasher	N. Routzahn	Middletown	March 19, 1850	7199
Churn, Tin	T. E. Warner	Harford Co.	Feb. 11, 1834	—
Cigar-wrapper	J. S. Suter and G. M. Palmer	Baltimore	Oct. 5, 1858	21704
Clay pipes, Machine for making	J. Jones	Baltimore	Jan. 25, 1859	22730
Clay pipes, Machine for making	W. Linton	Baltimore	Aug. 23, 1859	25233
Clay, Tempering	S. Miller and G. Roller	Manchester P.O.	July 31, 1846	4676
Climbing poles, Machine for	H. D. Chapman	Baltimore	March 11, 1851	7966
Clothes, Compound for imparting a gloss to	W. D. Beaumont	Baltimore	Oct. 8, 1850	7695
Clothes-drier	O. H. Waters	Baltimore	Sept. 13, 1859	25474
Clothes-frame	J. Burr	Baltimore	July 26, 1859	24904
Clover-seed huller	S. West	Harford Co.	Jan. 16, 1835	—
Clover-seed hulling machine	J. Flook	Middletown	May 10, 1838	733
Coach, pleasure-carriage, railway-car, &c.	T. Shriver	Cumberland	Nov. 7, 1839	1399
Coal, Conveying, cleaning, and assorting	J. G. Brant	Cumberland	March 14, 1846	4415
Coal-splitting machine	J. H. Lyon	Baltimore	Feb. 23, 1858	19429
Cock, Basin	R. Leitch	Baltimore	March 3, 1857	16736
Cock, Hydrant	E. Hubball	Baltimore	May 11, 1841	2086
Cock, Hydrant stop	L. Magers, F. Davis and W. Dukehart	Baltimore	June 22, 1842	2683
Cock, Steam-boiler try	J. F. Cook	Baltimore	Sept. 20, 1859	25544
Cock, Water and air	J. L. Chapman	Baltimore	Oct. 14, 1841	2304
Cocks for hydrants, Constructing	J. Martin	Baltimore	Feb. 10, 1841	1972
Cocoons, Construction of lodgements in cocooneries for attachment of the	S. M. Jenkins	Easton	Sept. 28, 1839	1347
Coffee roaster	J. R. Remington	Baltimore	Jan. 7, 1847	4922
Coffin for use in case of doubtful death	C. H. Eisenbrandt	Baltimore	Nov. 15, 1843	3335
Coin detector, Counterfeit	G. B. Smith	Baltimore	Sept. 6, 1853	9997
Collar, Horse	E. W. Briding and F. G. Maxwell	Baltimore	Nov. 27, 1860	30715
Collar, Horse	J. Bullock	Baltimore	Jan. 10, 1860	26748
Collar, Horse	T. Harvey	Baltimore	April 12, 1859	23575
Collar, Horse	T. Harvey	Baltimore	April 12, 1859	23576
Combs, Manufacturing	A. B. Newton	Baltimore	March 31, 1834	—
Compost	E. Blanchard	Greenfield Mills	Aug. 9, 1859	24988

UNITED STATES PATENTS—*Continued*

Invention	*Inventor*	*Residence*	*Date*	*Number*
Condensor, Coal oil	W. G. W. Jaeger	Baltimore	June 28, 1859	24561
Condensing-apparatus for salt and gases	J. C. Saloman, Jr.	Baltimore	June 16, 1857	17586
Cooking apparatus and house warmer	R. Johnson	Baltimore	Nov. 19, 1833	—
Cooking-boiler	L. S. De Bibory	Baltimore	May 11, 1852	8939
Cooking-utensil for boiling and steaming	J. Stevens	Middletown	Oct. 31, 1848	5890
Core box	J. S. Harper	Baltimore	June 5, 1860	28574
Corn and cob grinding mill	S. A. Bantz and W. Andrew	Frederick	July 22, 1851	8243
Corn and cob mill	R. F. Maynard	Baltimore	April 7, 1857	16988
Corn and cob mills, Securing the legs of sectional	R. F. Maynard	Baltimore	April 7, 1857	16987
Cornhusks, Slitting	A. Barrett	Baltimore	April 21, 1836	—
Cornhusker	W. N. Rowe	Sharpsburgh	Feb. 8, 1859	22894
Cornplanter	H. Blair	Glenross	Oct. 14, 1834	—
Cornsheller	W. Beach	Baltimore	April 18, 1846	4460
Cornsheller	W. Beach	Baltimore	Dec. 26, 1848	5982
Cornsheller	B. Bridendolph	Clear Spring	Dec. 20, 1859	26471
Cornsheller	N. Goldsborough	Easton	Feb. 12, 1841	1975
Cornsheller	D. S. Hollister	Baltimore	June 13, 1846	4572
Cornsheller	S. H. Kisinger	Williamsport	Oct. 31, 1839	1385
Cornsheller	J. Murray	Baltimore	Oct. 7, 1846	4805
Cornsheller	E. Parker	Baltimore	April 20, 1858	20003
Cornsheller	D. O. Prouty and E. Whitman	Phila., Pa., and Baltimore	May 29, 1849	6421
Cotton and hay press, Portable	A. G. Murray	Annapolis	Jan. 9, 1835	—
Cotton-duck, Dressing	H. N. Gambrill	Baltimore	Oct. 21, 1851	8444
Coupling-iron for railway and other carriages	T. G. Owen	Baltimore	July 1, 1840	1666
Cracker and biscuit cutting	J. Clark and H. Henderson	Baltimore	June 13, 1831	—
Cracker and biscuit cutting	S. P. Clark	Baltimore	Nov. 7, 1835	—
Cracker and biscuit cutting	J. S. Stiles	Baltimore	Aug. 9, 1831	—
Cracker cutting machine	C. P. Forbes	Baltimore	Sept. 17, 1841	2180
Cracker, biscuit, pilot-bread, &c., Machine for cutting	H. Henderson	Baltimore	Sept. 13, 1830	—
Crow-killer	N. J. Tilghman	Salisbury	July 5, 1853	9835
Cultivator	J. H. and E. H. Anderson	Easton	Nov. 27, 1860	20709
Cultivator	J. W. & L. Batson	Clarksville	May 24, 1859	24089
Cultivator	J. S. Eastman	Baltimore	June 30, 1836	—
Cultivator	S. Hoake	Frederick	March 27, 1860	27632
Cultivator	T. A. Robertson	Friendship	Oct. 27, 1857	18520
Cut-off valve motion	S. W. Rogers	Baltimore	Dec. 21, 1852	9488
Cut-off valves, Method of operating steam-engine	J. Cochrane	Baltimore	April 16, 1845	4002
Cutter-head, Rotary	I. P. Tice	Baltimore	Dec. 6, 1859	26383

Cutting irregular forms, Machine for	I. P. Tice	Baltimore	May 24, 1859	24163
Distillation of salt water, Ship's galley for	E. Hutchison	Baltimore	May 20, 1839	1156
Diving Bell	J. R. Wooster	Baltimore	April 24, 1849	6397
Door fastener	E. P. Moulton	Baltimore	April 29, 1859	14773
Door-register	J. G. Miller	Swanton	March 16, 1858	19646
Dough, Machine for breaking or working	J. W. Post	Baltimore	March 14, 1840	1516
Dough making and kneading machine	S. M. Ridgeway	St. Michael's	July 1, 1856	15254
Draft in smoke-pipes, Using exhaust steam for increasing	R. Winans	Baltimore	April 10, 1847	5056
Duck-shooting boat	R. Bogle	Rock Hall	May 5, 1857	17192
Egg-beater	H. F. Drott	Cumberland	Sept. 18, 1860	30053
Egg-beater, Rotary	R. Collier	Baltimore	Dec. 23, 1856	16267
Envelope, Safety	W. S. Stetson	Baltimore	Sept. 27, 1859	25590
Etching stones, Composition for	A. Hoen	Baltimore	April 24, 1860	27981
Evaporator	S. T. Harrison	Baltimore	Dec. 21, 1838	1056
Exhaust regulator for locomotives, Rotary	E. R. Addison	Baltimore	Oct. 13, 1857	18373
Eye-shading apparatus	F. H. Jones	Federalsburgh	Aug. 18, 1857	18015
Fan, Wheat	J. Montgomery and J. Montgomery	Lancaster, Pa. and Baltimore	June 12, 1855	13062
Fanning mill	A. Erwin	Jefferson	Sept. 20, 1839	1354
Feather-dresser	S. Keplinger	Baltimore	Feb. 12, 1836	—
Feather-renovator	J. W. Post and R. Collier	Baltimore	March 2, 1836	—
Fellies, Sawing and boring	W. W. Forwood	Abingdon	Nov. 19, 1833	—
Felly-sawing mill	I. Sheetz	Taneytown	May 20, 1842	2632
Fence	O. H. Woodworth	Upper Marlborough	Nov. 27, 1860	30780
Fertilizing purposes, Method of preparing bones for	D. Stewart	Annapolis	Oct. 11, 1859	25772
Fifth-wheel of fire-engines and other vehicles	R. Poole	Baltimore	Aug. 16, 1859	25164
File-cutting machine	G. Crosby	Baltimore	Dec. 4, 1849	6922
Filter	W. Linton	Baltimore	Nov. 29, 1859	26274
Filter and refrigerator	J. T. Craddock	Baltimore	Dec. 31, 1845	4344
Filtering apparatus	L. Ayres	Baltimore	July 8, 1834	—
Fire-arm	J. H. Merrill	Baltimore	Jan. 8, 1856	14077
Fire-arm	C. V. Nickerson	Baltimore	Jan. 27, 1852	8690
Fire-arm, Breech loading	J. H. Merrill	Baltimore	July 20, 1858	20954
Fire-arm, Breech loading	D. E. Snider	Baltimore	March 20, 1860	27600
Fire-arm percussion lock	J. H. B. Latrobe	Howard Co.	Feb. 26, 1856	14319
Fire engine	A. Barrett	Baltimore	Feb. 18, 1841	1982
Fire engine	J. J. Giraud	Baltimore	Nov. 11, 1830	—
Fire place	S. Hammond	Baltimore	June 25, 1839	1197
Fire plug and hydrant	J. M. Jordon	Baltimore	Sept. 8, 1838	909
Flag, Signal	H. J. Rogers	Baltimore	Jan. 2, 1855	12140
Flour by means of heated air, Kiln drying	N. Tyson	Baltimore	Aug. 3, 1831	—

UNITED STATES PATENTS—*Continued*

Invention	*Inventor*	*Residence*	*Date*	*Number*
Flour, Manner of mixing the middlings with the chops in the process of making	A. D. Worman	Fredericktown	July 23, 1841	2189
Fodder cutting and grinding machine	J. Royer	Uniontown	March 12, 1845	3938
Fodder cutting machine, Corn	J. Elgar	Baltimore	June 19, 1847	5159
Folding table, Portable	C. D. Barnitz	Baltimore	July 29, 1856	15407
Friction in machinery, Reducing	J. J. Reekers	Baltimore	June 13, 1831	—
Friction in mill-gudgeons, Reducing	F. Eichelberger	Creagerstown	June 29, 1833	—
Friction of axles, mandrils, &c., Reducing	I. Cooper	Baltimore	Sept. 28, 1831	—
Fruit and vegetable preserver	P. Kephart	Uniontown	Sept. 24, 1844	3758
Furnaces, Feeding	S. M. Fales	Baltimore	May 16, 1846	450
Garlic from wheat, Separating	S. Fahrney	Boonsborough	Oct. 26, 1842	2835
Garlic-machine	S. Fahrney	Boonsborough	Dec. 5, 1843	3367
Gas-bracket	J. R. Hunter	Baltimore	Oct. 30, 1855	13739
Gas-engines, Arrangement of	J. C. F. Salomen	Baltimore	May 4, 1858	20172
Gas-generator	C. F. Brown	Baltimore	Feb. 26, 1850	7115
Gas-generator	J. A. Bruce	Baltimore	May 12, 1857	17309
Gas heating and cooking apparatus	R. S. Andrews	Baltimore	May 12, 1857	17251
Gas-meter	C. F. Brown	Baltimore	June 22, 1842	2687
Gasometer	H. B. Williams	Baltimore	June 11, 1830	—
Glass-furnace	F. Schaum	Baltimore	April 25, 1854	10830
Governor with a slide valve, Combination of a	R. Gornall	Baltimore	Sept. 14, 1858	21493
Grain cleaning machine	S. Bentz	Boonsborough	July 23, 1841	2193
Grain cleaning machine	G. W. Bowers	Leitersburgh	Sept. 24, 1850	7662
Grain cleaning machine	T. McCrea	Anne Arundel Co.	Aug. 9, 1839	1280
Grain cleaning machine	W. Partridge and G. W. Shaw	Ellicott's Mills	June 15, 1858	20581
Grain cleaning machine	T. Reese	Baltimore	July 20, 1831	—
Grain, grass seed, rice, &c., from straw, Separating	A. Look and W. Coleman, Jr.	Fredericktown	March 21, 1832	—
Grain-scourer and separator	S. Canby	Ellicott's Mills	May 26, 1857	17363
Grain-separator	D. Claude, Jr.	Annapolis	Feb. 24, 1843	2974
Grain-separator	P. Geiser	Smithsburgh	Oct. 19, 1852	9341
Grain-separator	P. Geiser	Smithsburgh	Oct. 9, 1855	13644
Grain to millstones, Feeding	M. & C. Painter	Owing's Mills	June 2, 1857	17446
Grain washer	G. & G. W. Feaga	Frederick	Jan. 4, 1853	9517
Graphodometer, Automatic mechanism for operating surveyor's	J. M. Wampler	Baltimore	July 13, 1858	20908
Grate and cooking stove	J. J. Giraud	Baltimore	Feb. 10, 1836	—
Grate for steam-engine	R. Winans	Baltimore	April 6, 1858	19890
Grate, Revolving horizontal coal	J. F. Weishampel	Baltimore	June 19, 1849	6541
Grinding mill	S. A. Bantz and W. Andrew	Frederick	Dec. 4, 1849	6916
Grubbing machine	J. B. Ash	Elkton	Aug. 21, 1860	29659

Guano and other fertilizers, Machine for distributing	E. Wagner	Westminster	Nov. 30, 1858	22212
Gum from machinery, Composition for removing	S. Maxwell	Baltimore	April 24, 1860	28001
Gun-stocks, Sawing	A. Myers	Boonsborough	Nov. 9, 1832	—
Guns, Shot-charge for measuring shot in charging	G. W. Dobbin	Baltimore	March 23, 1838	654
Gutta-percha boats, Making	E. B. Larchar	Baltimore	July 24, 1855	13315
Harness-fastening	T. Henderson	Harford Co.	July 27, 1852	9149
Harness from horse, Apparatus for detaching	S. Hunt	Baltimore	July 11, 1854	11262
Harness from horse, Detaching	G. Yellott	Bel Air	June 15, 1852	9044
Harness, Riveting	W. Dukehart	Baltimore	March 3, 1836	—
Harness, Safety	C. Rogers	Baltimore	July 22, 1833	—
Harp, Keyed	A. Kuhn	Baltimore	Jan. 27, 1857	16489
Harvester	G. E. Chenoweth	Baltimore	March 20, 1858	19749
Harvester	G. E. Chenoweth	Baltimore	Feb. 8, 1859	22855
Harvester	G. E. Chenoweth	Baltimore	March 1, 1859	23077
Harvester	G. E. Chenoweth	Baltimore	Nov. 15, 1859	26091
Harvester	G. E. Chenoweth	Baltimore	March 13, 1860	27617
Harvester	L. H. Colburn	Baltimore	April 12, 1859	23552
Harvester	G. E. Cooper	Baltimore	Oct. 12, 1858	21741
Harvester	O. Hussey	Baltimore	Aug. 23, 1859	25201
Harvester	S. A. Lindsay	Unionville	Aug. 2, 1859	24944
Harvester	J. W. Patterson and L. H. Colburn	Baltimore	March 8, 1859	23190
Harvester	B. F. Ray	Baltimore	Feb. 5, 1856	14205
Harvester	B. F. Ray	Baltimore	Feb. 15, 1859	22977
Harvester	I. S. & H. R. Russell	New Market	March 29, 1859	23399
Harvester	W. S. Stetson	Baltimore	April 5, 1859	23508
Harvester	W. S. Stetson	Baltimore	Aug. 14, 1860	29632
Harvester, Corn	W. Beach	Baltimore	Oct. 4, 1859	25699
Harvester cutting apparatus, Corn and cane	J. W. Batson	Triadelphia	July 29, 1856	15409
Harvester, Grain	B. G. Fitzhugh	Frederick	March 28, 1854	10693
Harvester, Grain	D. S. Middlekauf	Hagerstown	March 14, 1854	10652
Harvester, Grain	F. Nicholson	Davidsonville	May 15, 1855	12888
Harvester, Grain and grass	J. H. Heyser and E. M. Mobley	Hagerstown	May 19, 1857	17328
Harvester rake	O. Dorsey	Howard Co.	March 4, 1856	14350
Harvester rake	S. A. Lindsay	Unionville	Dec. 11, 1860	30882
Harvester rake and reel, Combined	M. Young, Jr.	Frederick	Sept. 18, 1860	30103
Harvester rakes, &c., Producing intermittent acceleration of motion in	J. Richardson	Buckeystown	June 19, 1855	13102
Harvester raking apparatus, Automatic	W. H. Wilson	Denton	May 8, 1860	28228
Harvester raking apparatus, Corn and cane	J. W. Batson	Triadelphia	July 29, 1856	15408
Harvesters, Method of gathering grain upon, and discharging it from the platform of	O. Hussey	Baltimore	Dec. 21, 1858	22368
Harvesting-machine	B. G. Fitzhugh	Frederick	June 28, 1859	24549

UNITED STATES PATENTS—*Continued*

Invention	*Inventor*	*Residence*	*Date*	*Number*
Harvesting-machine	W. S. Stetson	Baltimore	May 17, 1859	24062
Harvesting-machine	W. S. Stetson and R. F. Maynard	Baltimore	May 17, 1859	24063
Harvesting-machine	B. Titcomb	Baltimore Co.	June 5, 1860	28618
Harvesting-machine	W. H. Wilson	Denton	May 10, 1859	23971
Harvesting-machine	M. Young, Jr.	Frederick	June 28, 1859	24598
Harvesting-machine	M. Young, Jr.	Frederick	Dec. 18, 1860	30999
Hats, Water proof	R. Mills	Baltimore	Feb. 27, 1832	—
Hats, bonnets, &c., Machine for ironning and pressing	R. Murdock	Baltimore	June 17, 1840	1635
Hats, Machine for coloring	G. M. Johnson	Port Deposit	Dec. 31, 1838	1454
Hats, Machine for washing and cleaning	W. Carlock	Baltimore	March 12, 1830	—
Heating furnace for buildings	S. B. Sexton	Baltimore	Aug. 14, 1855	13439
Heating rooms	R. B. Varden	Baltimore	Feb. 6, 1832	—
Heel spur	M. Young, Jr.	Frederick	Jan. 31, 1860	27019
Hides and skins, Process for bating	W. Zollikoffer	Middleburgh	Feb. 3, 1838	592
Hides in the vats, Handling	S. Stem and D. Wierman	Mechanicstown	Jan. 9, 1834	—
Hides, Machine for breaking	I. S. Hershey	Hagerstown	Sept. 11, 1849	6710
Hides, Process for bating	W. Zollikoffer	Middleburgh	Aug. 18, 1842	2756
Hides, Softening	J. Robinson	Baltimore	March 18, 1834	—
Hinge, Door	J. Elgar	Baltimore	April 11, 1854	10774
Hinge for fastening blinds, shutters and doors	R. B. Varden	Baltimore	Feb. 12, 1845	3903
Hinge of rolling iron shutters	A. L. Johnson	Baltimore	June 25, 1850	7457
Hinge, Shutter	H. F. Drott	Cumberland	Oct. 11, 1859	25728
Hogs by steam, Scalding	T. J. Godman	Baltimore	Feb. 13, 1835	—
Hominy machine	W. Davis	Middleburgh	May 24, 1859	24104
Hominy machine	J. Gehr	Clear Spring	July 17, 1860	29159
Hominy machine	J. Nesbitt, Jr. and T. J. Crosley	Clear Spring	Sept. 11, 1855	13549
Hominy machine	S. Null	Carroll Co.	May 25, 1852	8972
Hominy mill	B. Bridendolph	Clear Spring	Aug. 22, 1854	11547
Hominy mill	G. Strause	Boonsborough	Sept. 20, 1859	25536
Horse power	S. Pelton	New Windsor	Dec. 18, 1855	13955
Horse rake	B. Bridendolph	Clear Spring	Jan. 4, 1859	22526
Horses, Detaching	P. T. Share	Baltimore	March 18, 1836	—
Hot-air furnace	J. Bouis	Baltimore	March 29, 1834	—
Hot-air furnace	S. Wethered	Baltimore	Jan. 3, 1860	26724
Hot-air furnace	J. Whitehill	Frederick	Nov. 8, 1859	26064
Hot-air furnace, bake-oven and heating room	J. Stahl	Baltimore	May 29, 1832	—
Hot-air furnace register	J. W. Geddes	Baltimore	March 2, 1858	19502
Hub boring tool	H. C. Garvin and J. H. King	Hagerstown	April 10, 1855	12677
Hub box, Wheel	I. Cooper	Baltimore	Feb. 7, 1831	—
Hub mortising machinery	A. Thompson	Ridgeville	April 25, 1843	3054

Hubs and ship's block, Box for wheel	I. Cooper	Baltimore	Jan. 27, 1830	—
Hubs for boxes, Tools for preparing	S. Fahrney	near Boonsborough	March 19, 1850	7185
Hubs of carriage-wheels, Lining metalic boxes for	M. Palmer	Baltimore	March 9, 1844	3463
Hydrant	J. L. Chapman	Baltimore	Oct. 12, 1842	2812
Hydrant	H. English	Baltimore	April 1, 1856	14557
Hydrant	D. Horne	Baltimore	March 31, 1836	—
Hydrant	W. James	Baltimore	Nov. 1, 1859	25969
Hydrant	S. T. Walker	Baltimore	Nov. 26, 1835	—
Hydrant	S. T. Walker	Baltimore	July 1, 1836	—
Hydrant	S. T. Walker	Baltimore	July 2, 1836	—
Hydrant waste-device	J. Culver	Baltimore	April 22, 1856	14712
Hydrants, Waste-attachment to	E. J. Baker	Baltimore	April 8, 1856	14592
Hydraulic ram	B. S. Benson	Harford Co.	Dec. 26, 1845	4328
Ice-cream freezer	A. H. Austin	Baltimore	Sept. 19, 1848	5775
Ice-cream freezer	J. Decker	Bel Air	Aug. 21, 1849	6661
Ice-cream freezer	T. M. Powell	Baltimore	Sept. 5, 1854	11651
Ice-cream freezer	W. G. Young	Baltimore	May 30, 1848	5601
Ice-house, Upper floor of	P. Kephart	Baltimore	Sept. 26, 1848	5798
Ice in rivers, Machine for planing away	R. W. Heywood	Baltimore	Jan. 26, 1858	19195
Inhaling-apparatus	S. H. Tilghman	Snow Hill	Nov. 21, 1854	11976
Instructor, Self	C. Varle	Baltimore	May 20, 1830	—
Iron, Machine for bending sheet or plate	J. Watchman	Baltimore	June 1, 1843	3116
Iron pipes, Method of employing centrifugal force in casting	T. J. Lovegrove	Baltimore	Dec. 26, 1848	5988
Iron smelting furnace	S. M. Fales	Baltimore	Feb. 8, 1859	22861
Keels to vessels, Attaching	T. F. Griffith	New Market	April 26, 1845	4016
Knob, Drawer, commode, &c.	D. Hottman	Baltimore	July 31, 1837	325
Ladder, Life, escape, and fire	J. Johnson	Baltimore	April 18, 1831	—
Lamp	J. Davidson	Baltimore	July 2, 1846	4617
Lamp	A. L. Fleury	Baltimore	July 5, 1859	24622
Lamp	G. T. Parkhurst	Baltimore	Sept. 13, 1859	25438
Lamp	C. Von Bonhurst	Hancock	Feb. 21, 1860	27248
Lamp, Argand	J. L. Tough	Baltimore	May 11, 1841	2091
Lamp-black, Manufacture of	W. G. W. Jaeger	Baltimore	July 18, 1854	11331
Lamp, Lard	I. Smith and J. Stonesifer	Boonsborough	Aug. 8, 1854	11497
Lamp or candlestick and match box combined	T. Shanks	Baltimore	Jan. 19, 1858	19158
Lamp, Safety	W. Pratt	Baltimore	Nov. 24, 1857	18704
Lamp, Self-lighting	T. W. Carroll	Baltimore	Jan. 24, 1860	26884
Lamp, Construction of	C. West	Baltimore	Oct. 7, 1844	3781
Lamp, Regulating the flame of	J. S. Tough	Baltimore	July 17, 1839	1246
Lancet, Spring	J. W. W. Gordon	Catonsville	Jan. 27, 1857	16479
Lanterns, Removable flanch bar for securing glass of	H. Crout	Baltimore	Jan. 15, 1856	14087

UNITED STATES PATENTS—*Continued*

Invention	*Inventor*	*Residence*	*Date*	*Number*
Leather, Composition for currying	I. S. Hershey	Hagerstown	June 12, 1847	5151
Leather-stretching machine	J. H. Haskell	Baltimore	May 15, 1860	28271
Leather water-proof and mode of applying same, Composition for rendering	C. F. Miller	Baltimore	Aug. 28, 1840	1749
Life and property saving vessels, Arrangement and means for balancing and propelling	J. Minifie	Baltimore	July 8, 1856	15298
Lime ashes, &c., Machie for spreading	F. H. Smith	Baltimore	July 5, 1837	258
Lime kiln	P. Griscom and C. S. Denn	Baltimore	Nov. 17, 1857	18635
Lime kiln	S. H. Robinson	Baltimore	Jan. 16, 1855	12242
Lime kiln	W. Robinson	Baltimore	April 14, 1857	17056
Lime kiln	A. H. Tyson	Baltimore	Sept. 28, 1839	1343
Liquids, Vessel for holding	J. Stimpson	Baltimore	Oct. 17, 1854	11819
Lock	E. M. Shaw	Baltimore	April 6, 1858	19879
Locomotive-boilers, Fire box of	R. Winans	Baltimore	April 27 1859	20115
Locomotive-engine	F. Barker	Baltimore	Sept. 1, 1836	—
Locomotive-engine	R. Winans	Baltimore	April 6, 1858	19889
Locomotive-engine	R. Winans	Baltimore	April 13, 1858	19962
Locomotive-engine	R. Winans	Baltimore	Aug. 24, 1858	21290
Locomotive-engine	R. Winans	Baltimore	Jan. 11, 1859	22597
Locomotive-engine boiler	J. Penniman	Baltimore	April 24, 1840	1568
Locomotive-engine boiler	R. Winans	Baltimore	April 27, 1859	20116
Locomotive-engine boilers, Fire box of	R. Winans	Baltimore	April 27, 1859	20114
Locomotive-engines, Boiler and water heater of	T. Perkins	Baltimore	June 26, 1849	6561
Locomotive-engines, for removing objects from the track, Attachment to	C. H. Eisenbrandt	Baltimore	June 14, 1859	24383
Locomotive-engines on railways, Braking	M. W. Verdin	Baltimore	July 5, 1859	24680
Locomotive-engines on railways, Propelling	M. W. Verdin	Baltimore	July 5, 1859	24679
Locomotive fire-box	R. & T. Winans	Baltimore	May 9, 1854	10901
Locomotive running-gear	R. Winans	Baltimore	Dec. 2, 1851	8571
Locomotive steam-engine	R. Winans	Baltimore	July 29, 1837	308
Locomotive steam-engine	R. Winans	Baltimore	July 29, 1837	311
Locomotive steam-engine	R. Winans	Baltimore	July 28, 1843	3201
Locomotive steam-engines, Framing of	R. Winans	Baltimore	July 29, 1837	305
Locomotive-tender	R. & T. Winans	Baltimore	May 23, 1854	10971
Loom	J. G. Melville and W. Brayshaw	Wetheredville	April 24, 1855	12762
Loom	R. Pilson and S. P. Heath	Laurel	May 27, 1856	14971
Loom for working any number of heddles, Weaver's	G. McCrae	Baltimore	Oct. 18, 1843	3309
Loom-temple	R. Pilson	Laurel	Sept. 14, 1858	21515
Loom-temple	J. Smith	Laurel	Aug. 7, 1855	13413
Lubricating compound	H. Vaughn and W. Hutton	Providence, R.I. and Baltimore	Aug. 2, 1859	24965

Lubricator	E. J. Baker	Baltimore	April 1, 1856	14549
Lubricator	E. Clampitt	Baltimore	Oct. 19, 1858	21816
Lubricator	J. Regester	Baltimore	Dec. 5, 1854	12047
Mail bag	T. J. Lamdin	Baltimore	May 10, 1859	23924
Mail bag	W. Ruddach	Baltimore	May 3, 1859	23863
Manure, Artificial	P. S. and W. H. Chappell	Baltimore	March 27, 1849	6234
Manure, Process of treating feldspar for	C. Bickell	Baltimore	Nov. 25, 1856	16111
Marble-sawing machine	J. Cochrane	Baltimore	Sept. 11, 1855	13540
Measure, Liquid	J. S. Tough	Baltimore	July 23, 1841	2187
Meat in market-places, Apparatus for preserving and holding butcher's	A. Seltzer	Baltimore	Sept. 5, 1840	1774
Medical extracts, Mode of evaporating solutions, decoctions, &c., and preparing	J. W. W. Gordon	Baltimore	Oct. 8, 1840	1805
Medicated fabric	H. Glynn	Baltimore	Dec. 21, 1858	22363
Medicine for cholera	J. Houck	Baltimore	Oct. 25, 1832	—
Mill-bush	J. Heck	Boonsborough	March 26, 1844	3505
Mill-bush	G. Strause	Boonsborough	Feb. 16, 1858	19386
Mill-bush	J. Wells	Baltimore	March 23, 1858	19727
Mill wheel	S. H. Freeman	Cecilton	May 17, 1836	—
Millstones, Balancing or adjusting	M. L. Chase	Baltimore	June 13, 1831	—
Millstones, Swinging spout for feeding	M. & C. Painter	Owing's Mills	July 1, 1856	15250
Mirrors in traps, Arrangement of	J. Stevens	Middleton	June 11, 1850	7431
Moldings, Machine for cutting wooden curved	I. P. Tice	Baltimore	May 3, 1859	23872
Mortising machine	F. Purden	Baltimore	June 14, 1853	9784
Mortising machine, Timber	E. M. Shaw	Baltimore	Sept. 22, 1838	937
Motive-power	J. G. Mitchell	Collington	March 1, 1859	23104
Motive-power, Liquid used as a	J. C. Saloman, Jr.	Baltimore	July 22, 1856	15391
Motive-power, Self	J. J. Giraud	Baltimore	March 31, 1836	—
Mowing-machine	W. & T. Schnebly	Hagerstown	Aug. 22, 1833	—
Mowing-machine	O. Hussey	Baltimore	July 5, 1859	24641
Muscial instrument, Stringed	G. L. Wild	Baltimore	Sept. 5, 1854	11655
Musical instrument, Wind	C. H. Eisenbrandt	Baltimore	Jan. 26, 1858	19187
Muscial instrument, Valve for wind	C. H. Eisenbrandt	Baltimore	July 4, 1854	11215
Nail machine, Wrought	A. V. B. Orr and G. Bantz	Frederick	Dec. 7, 1858	22238
Nail, spike, tack, horseshoe and nail, screwbolt, &c., Wrought-iron	W. & T. Schnebly	Hagerstown	March 3, 1834	—
Netting-machine	J. McMullen	Baltimore	June 27, 1846	4608
Netting-machine	J. McMullen	Baltimore	July 1, 1856	15245
Oakum, Combination of machinery for picking	J. Stansbury and W. Ridgeway	Baltimore	Jan. 17, 1842	2428
Odometer and counting machine	J. L. Martin	Baltimore	June 17, 1856	15140
Oil-can	W. C. Arthur	Baltimore	April 10, 1860	27876
Oil-cup, Lubricating	E. N. Roland	Baltimore	Dec. 15, 1857	18863
Ointment, Machine for making mecurrial	J. W. W. Gordon	Baltimore	June 5, 1844	3619
Omnibus-register	L. Cromwell	Baltimore	April 15, 1856	14652

UNITED STATES PATENTS—*Continued*

Invention	*Inventor*	*Residence*	*Date*	*Number*
Omnibus-register	L. B. Person and J. L. Brockett	Baltimore	Aug. 19, 1851	8304
Omnibus-registers, Self-locking device for	M. Offley	Baltimore	Aug. 7, 1860	29549
Ore, Stamping-machine for crushing	W. Murray	Baltimore	Aug. 23, 1859	25213
Oven	T. N. Reid	Baltimore	May 18, 1852	8960
Oyster, Apparatus for opening	W. Beach	Baltimore	Sept. 29, 1857	18273
Oysters &c., Cooking	L. P. Keach	Baltimore	April 18, 1854	10806
Paddle, Boat	J. Cochran	Baltimore	April 28, 1836	—
Padlock	W. Bohannan	Baltimore	April 17, 1860	27883
Paint-composition	R. Brannon	Baltimore	Feb. 5, 1847	4958
Panacea	J. Houck	Baltimore	May 9, 1833	—
Paper, Machine for washing rags in the manufacture of	R. Carter	Elkton	Feb. 22, 1838	615
Paper-pulp for reeds, Preparing	H. Lowe	Baltimore	May 25, 1858	20355
Paper-pulp, Manufacture of	H. Glynn	Baltimore	Feb. 6, 1855	12361
Paper-stock from reeds	H. Lowe	Baltimore	July 13, 1858	20884
Peg cutter, Boot and shoe	S. R. Jones	Baltimore	Jan. 8, 1856	14060
Pen, Fountain	C. W. Krebs	Baltimore	Nov. 26, 1850	7798
Pessary for prolapsus uteri	S. K. Jennings	Baltimore	Jan. 20, 1843	2921
Photographic bath	J. H. Morrow	Baltimore	April 14, 1857	17066
Photographic impressions, Preparation of oil ground to receive	J. H. Tatum	Baltimore	April 15, 1856	14679
Piano-forte	L. Fissore	Baltimore	July 22, 1833	—
Piano-forte	H. Hartye	Baltimore	March 12, 1836	—
Piano-forte	L. Reuckert	Baltimore	March 12, 1845	3940
Piano-forte	L. Ricketts	Baltimore	June 24, 1844	3643
Piano-forte action	J. J. Wise	Baltimore	June 27, 1839	1205
Piano-forte action	J. J. Wise	Baltimore	Dec. 26, 1848	5990
Piano-forte sound board	J. Newman	Baltimore	April 7, 1857	16990
Piston, Steam-engine	R. Winans	Baltimore	April 6, 1858	19888
Pitcher, Ice	J. Stimpson	Baltimore	Oct. 5, 1858	21717
Pitcher, Ice	J. H. Stimpson	Baltimore	March 8, 1859	23200
Plane, Bench	H. L. Kendall	Baltimore	June 8, 1858	20493
Planning-machine	J. McGregor, Jr.	Savage Factory	July 15, 1840	1690
Planter, Corn	J. G. Mitchell	Collington	March 29, 1859	23382
Planter, Cotton	H. Blair	Glenross	Aug. 31, 1836	—
Planter, Seed	P. Horn	Hagerstown	Aug. 23, 1853	9955
Planter, Seed	M. J. Hunt and J. H. Haines	Rising Sun	Jan. 5, 1858	19026
Planter, Seed	E. Myers	Carroll Co.	June 19, 1849	6542
Planter, Seed	G. Page	Baltimore	May 25, 1840	1617
Planter, Seed	E. Parker	Baltimore	June 1, 1858	20440
Planter, Seed	J. Robinson	Sharpstown	Dec. 1, 1857	18772

Planter, Seed	J. Robinson	Sharpstown	April 17, 1860	27929
Planter, Seed	B. M. Snell	Hancock	March 20, 1855	12561
Planter, Seed	W. H. Stuart	Millington	Oct. 4, 1859	25685
Planter, Seed	H. Vermillion	Rising Sun	Nov. 2, 1852	9374
Planters, Gearing for seed	M. J. Hunt	Rising Sun	June 3, 1851	8138
Plaster, Blister	E. Perkins	Baltimore	Jan. 5, 1830	—
Plow	W. Black	Anne Arundel Co.	Oct. 4, 1831	—
Plow	E. Clezy	Baltimore	Sept. 14, 1843	3266
Plow	J. Gehr	Col. of St. James	Nov. 2, 1858	21953
Plow	J. Heckendorn	Elkton	Dec. 23, 1856	16277
Plow	W. Ogle	Frederick	April 6, 1843	3034
Plow-cleaner	J. F. Reasin	Darlington	April 9, 1850	7274
Plow-cleavis	S. Wilt	Hagerstown	Sept. 3, 1846	4730
Plow, Railway snow	W. Rhoads	Baltimore	April 19, 1859	23709
Plow, Self-sharpening	R. B. Chenoweth	Baltimore	March 7, 1834	—
Plow, Self-sharpening	J. W. Post	Baltimore	Oct. 8, 1838	970
Plows, Combined	J. Knodle	Bakersville	April 8, 1840	1543
Portable boat	R. C. Buchanan	Baltimore	March 31, 1857	16904
Post-boring and rail-pointing machine	J. Young	Middletown	July 10, 1855	13243
Potash, Manufacture of chromate of	I. Tyson, Jr.	Baltimore	Oct. 9, 1845	4224
Potato-rot, Compound for treating	L. Reed	Baltimore	July 27, 1858	21023
Preserve cans, Sealing	A. Taylor	Baltimore	Dec. 7, 1858	22247
Preserving green corn	D. Rowe	Baltimore Co.	June 30, 1857	17697
Press	J. J. Wise	Baltimore	May 16, 1839	1152
Printing machine	O. T. Eddy	Baltimore	Nov. 12, 1850	7771
Printing, painting, & c., Preparing canvas for	E. Lee	Baltimore	May 12, 1857	17308
Printing press	W. & T. Schnebly	Hagerstown	Sept. 7, 1839	1315
Printing press, Card	W. W. Clarkson	Baltimore	April 27, 1858	20039
Projectile for rifled ordinance	J. H. Merrill	Baltimore	Oct. 13, 1857	18401
Propellor and paddle-wheel shaft	W. Peters	Baltimore	Nov. 29, 1859	26290
Propellor, Duck's-foot	G. Seibert	Hagerstown	Nov. 7, 1848	5911
Propellor, Rocking	E. Landis	Baltimore	July 24, 1860	29288
Propellor, Screw	J. Montgomery	Baltimore	April 12, 1859	23598
Propellors for boats and other vessels, Segmental spiral	J. Laing	Ellicott's Mills	Oct. 22, 1842	2825
Propelling boats on canals or rivers	J. Finlay	Baltimore	April 17, 1837	165
Propelling vessels by screw or spiral levers	J. J. Giraud	Baltimore	April 29, 1831	—
Pump	G. W. Fulton	Baltimore	May 29, 1849	6486
Pump	W. M. Henderson	Baltimore	Oct. 4, 1859	25642
Pump	M. Metee	Baltimore	May 20, 1830	—
Pump	M. Metee	Baltimore	March 8, 1833	—
Pump	L. B. Schafer	Baltimore	March 22, 1859	23314
Pump	T. J. Wolfe	Baltimore	April 10, 1844	3529
Pump for fire-engines	J. Newman	Baltimore	April 14, 1838	691

UNITED STATES PATENTS—*Continued*

Invention	*Inventor*	*Residence*	*Date*	*Number*
Pump, Force	R. Poole	Baltimore	Sept. 6, 1859	25366
Pump-piston	R. Poole	Baltimore	Sept. 6, 1859	25367
Pump, Pneumatic breast	J. P. Stabler	Sandy Spring	June 19, 1834	—
Pump used in low pressure or condensing steam engines, Air	C. Reeder	Baltimore	Nov. 15, 1843	3334
Rail, Tubular two-part	J. Elgar	Baltimore	March 10, 1849	6164
Railway	J. Elgar	Brookville	March 12, 1845	3947
Railway-brake, Automatic	A. I. Toulemin	Ellicott's Mills	Nov. 24, 1857	18715
Railway-carriage	I. Cooper	Baltimore	Oct. 25, 1832	—
Railway-carriage	I. Knight	Baltimore	July 10, 1834	—
Railway-carriage wheel	J. Stimpson	Baltimore	Aug. 23, 1831	—
Railway-carriage wheel, Iron for	J. Finlay	Baltimore	March 1, 1830	—
Railway-carriage wheels, Rail or plate for	J. Stimpson	Baltimore	Aug. 23, 1831	—
Railway-carriages by horse power, Propelling	J. Stimpson	Baltimore	Feb. 16, 1830	—
Railway-curves, Turning short	J. Stimpson	Baltimore	Sept. 26, 1835	—
Railway for hauling up and launching vessels, Marine	J. Riggin	Baltimore	Aug. 30, 1838	901
Railway, Marine	A. Flannigan	Baltimore	Jan. 16, 1843	2911
Railway-signal	P. F. Milligan	Baltimore	Dec. 18, 1860	30979
Railway-switch	W. Howard	Baltimore	Aug. 2, 1832	—
Railway-switch	J. Stimpson	Baltimore	Aug. 23, 1831	—
Railway-switch, Self acting	E. I. Sterns	Ellicott's Mills	Sept. 5, 1848	5752
Railway-switches, Method of shifting	R. W. Sheckels	Baltimore	Oct. 22, 1840	1833
Railway-timber	J. Stimpson	Baltimore	June 3, 1830	—
Railway, turn-about	J. Stimpson	Baltimore	Aug. 23, 1831	—
Railways, Cast or wrought iron plates for	J. Stimpson	Baltimore	Sept. 26, 1835	—
Railways, Construction of	J. Herron	Baltimore	April 18, 1840	1558
Railways, Machine for constructing timber	J. Stimpson	Baltimore	Aug. 13, 1838	879
Railways, Mode of constructing	J. Stimpson	Baltimore	July 26, 1839	1262
Railways, Turning short curves on	J. Stimpson	Baltimore	Aug. 23, 1831	—
Railways, Wooden splice piece for	I. R. Trimble	Baltimore	April 10, 1855	12704
Razors, Application of polishing-slate for sharpening	W. Child	Baltimore	Dec. 15, 1835	—
Reaper	O. Dorsey	Triadelphia	June 24, 1856	15174
Reaping and mowing machine	M. Young, Jr.	Frederick	Oct. 2, 1860	30276
Reaping machine	O. Hussey	Baltimore	Aug. 7, 1847	5227
Reaping machine	W. S. Stetson	Baltimore	Sept. 25, 1860	30167
Reaping machines, Automatic rake for	B. G. Fitzhugh and M. Young, Jr.	Frederick	Sept. 6, 1859	25327
Refrigerator	R. D. Burns	Baltimore	Nov. 11, 1837	463
Refrigerator	E. Larrabee	Baltimore	Feb. 26, 1850	7121
Refrigerator	H. L. McAvoy	Baltimore	Jan. 9, 1855	12210

Refrigerator	H. L. McAvoy	Baltimore	March 8, 1859	23184
Refrigerator	J. S. Tough and J. T. Craddock	Baltimore	March 14, 1848	5471
Rendering tallow	L. Moutrop	Baltimore	June 27, 1842	2694
Retort for distilling oil from coal	W. G. W. Jaeger	Baltimore	May 31, 1859	24217
Reverberatory furnance	A. Ellicott and J. McCrone	Baltimore	May 16, 1846	4516
Rice-polishing	L. H. Colburn	Baltimore	April 5, 1859	23449
Roof, Tin, copper and zinc	J. Bouis	Baltimore	June 26, 1835	—
Rotary engine	W. & T. Schnebly	Hagerstown	Aug. 24, 1848	5732
Rotary steam-engine	T. Powell	Baltimore	Oct. 1, 1830	—
Saddle	J. H. Boyd	Baltimore	Sept. 25, 1860	20118
Saddle	W. F. Dean	Baltimore	March 13, 1860	27621
Saddle	S. Ringgold	Ft. McHenry	Oct. 7, 1844	3779
Saddle, Military	W. H. Jenifer	Baltimore	June 26, 1860	28867
Saddle, Riding	J. C. Salomon, Jr. and G. E. Cooper	Baltimore	July 22, 1856	15392
Saddle tree, Spring	J. H. Boyd	Baltimore	Sept. 20, 1859	25485
Safe-door, Iron	L. H. Miller	Baltimore	Oct. 25, 1859	25906
Safe, Meat-preserving	D. B. Dickinson	Baltimore	July 16, 1842	2719
Sail reefing device	L. B. Wakeman	Baltimore	Jan. 18, 1859	22683
Salinometer and water-gage for steam boilers	J. Montgomery	Baltimore	April 24, 1860	28003
Sash-fastener	R. Johnson	Frederick	May 29, 1860	28491
Sash, Hanging Window	R. Johnson	Frederick	Aug. 10, 1858	21136
Sash-supporter	C. S. Bruff	Baltimore	Aug. 19, 1856	15557
Sausage cutting and stuffing machine	S. Fahrney	Boonsborough	Feb. 1, 1831	—
Sausage-cutting machine	J. Braman	Baltimore	March 8, 1832	—
Sausage-meat, Cutting	V. Glass	Funkstown	Feb. 6, 1834	—
Sausage-meat, Cutting	D. S. Middlekauff	Hagerstown	Jan. 23, 1834	—
Sausage-stuffing machine	S. Fahrney	Washington Co.	Feb. 16, 1830	—
Saw for sawing timber, Annular	R. Grant	Baltimore	Oct. 8, 1838	973
Saw-mill	J. Landers	Alleghany Co.	April 28, 1836	—
Saw-mill	E. Mobley	Frederickstown	June 5, 1830	—
Saw-mill dogs, Operating	G. W. Hearn	Princess Anne	March 10, 1857	16795
Saw-mill head blocks, Ratchet-catch for	G. F. Page	Baltimore	Jan. 3, 1854	10394
Saw-mill, Portable circular	G. Page	Baltimore	July 16, 1841	2174
Saw-mills, Endless chain carriage for	J. Murray	Baltimore	Oct. 11, 1836	51
Saw-mills, Self-adjusting log-brace for	B. Cushwa	Clear Spring	July 15, 1840	1691
Saw-mills, Sustaining logs in	J. Rohrer	Rohrersville	May 29, 1841	2114
Saw-set	T. Taylor	Port Deposit	Aug. 15, 1835	—
Saws, Construction of circular	R. K. Hawley	Baltimore	March 13, 1860	27628
Saws, Construction of segmental circular	R. K. Hawley	Baltimore	Sept. 13, 1859	25411
Saws, Driving	I. Brown	Baltimore	July 19, 1853	9855
Saws, Operating scroll	J. L. Lawton	Baltimore	Oct. 3, 1857	18547
Scales, Weighing	J. Mardin	Baltimore	Sept. 9, 1835	—
Screw-cutting machine	P. Chapin	Baltimore	April 27, 1858	20036

UNITED STATES PATENTS—*Continued*

Invention	*Inventor*	*Residence*	*Date*	*Number*
Screw, Wedge	R. Whitney	Baltimore	April 10, 1830	—
Seal-lock for railway-cars	J. Clark	Baltimore	March 20, 1860	27542
Sealing purposes, Earthen vessels for hermetically	E. Bennett	Baltimore	Dec. 2, 1856	16139
Seed-drill	J. W. Kirk	Rising Sun	July 20, 1858	20946
Sewing-machine hemming-attachment	W. P. Mitchell	Baltimore	June 26, 1860	28889
Shaft, Wrought-iron	J. Montgomery	Baltimore	July 24, 1855	13339
Sheet-metal-bending maching	H. Evans, Jr.	Baltimore	Oct. 30, 1860	30532
Shingle riving and dressing machine	W. S. George	Baltimore	May 29, 1841	2109
Ship-timber, Ventilating	J. L. Harley and S. Maxwell	Baltimore	Sept. 12, 1854	11669
Shirts, Making	O. F. Winchester	Baltimore	Feb. 1, 1848	5421
Shot, Machine for manufacturing	A. Duvall	Baltimore	May 8, 1838	727
Shot, Manufacturing	J. Willard	Baltimore	July 10, 1830	—
Shower bath	J. Corthan	Baltimore	Jan. 23, 1849	6047
Shower bath	E. Larrabee	Baltimore	Jan. 2, 1849	5993
Shutter and sash fastener	T. Harvey	Baltimore	April 16, 1850	7289
Shutter, Double-panel	C. S. Bruff	Baltimore	May 6, 1856	14798
Shutter or guard, Window	A. L. Johnson	Baltimore	April 11, 1842	2554
Shutters in any required position, Apparatus for securing	C. W. Krebs	Baltimore	March 25, 1851	7995
Shuttle	D. Carroll	Baltimore	Dec. 20, 1853	10335
Silk from cocoons, Reeling	G. Heritage	Chestertown	Dec. 19, 1840	1910
Silk from cocoons, Spinning	G. Heritage	Chestertown	Dec. 19, 1840	1909
Silk-skeining machine	G. Heritage	Chestertown	Nov. 26, 1840	1871
Smut-machine	J. Heygel	Baltimore	Jan. 26, 1847	4944
Smut-machine	J. Heygel	Cumberland	June 5, 1849	6505
Soap-boiling apparatus	C. Morfit	Baltimore	July 29, 1856	15432
Soap by steam, Manufacturing	J. Kennedy	Baltimore	Oct. 1, 1830	—
Soap by steam, Manufacturing	B. Zoll and J. Doyle	Baltimore	July 19, 1830	—
Soap, Process for making	C. Morfit	Baltimore	March 16, 1858	19667
Soda fountain	W. Coughlan	Baltimore	Oct. 25, 1853	10167
Solar camera	D. A. Woodward	Baltimore	Feb. 24, 1857	16700
Sowing guano and other fertilizers, Machine for	J. H. Leach	Oakville	Jan. 4, 1859	22505
Spark and gas consumer	D. Matthew	Baltimore	Feb. 20, 1849	6116
Spark-arrester	W. Duff	Baltimore	Sept. 30, 1845	4217
Spark-arrester	W. C. Grimes	Baltimore	May 13, 1845	4046
Spark-arrester	J. S. Lafitte	Baltimore	Feb. 1, 1848	5422
Spark-arrester, Locomotive	W. Duff	Baltimore	Dec. 20, 1837	521
Spark-catcher	N. Turbutt	Fredericktown	Dec. 7, 1839	1425
Spark-extinguisher	W. S. Montgomery	Baltimore	July 28, 1838	858
Sparks and arresting cinders in chimneys of locomotives, &c., Apparatus for extinguishing	J. Finley	Baltimore	Dec. 28, 1838	1042

Spectacle frames, Forming joints on the end pieces of	T. Eltonhead	Baltimore	April 2, 1841	2034
Spike-machine	P. P. Trayser	Baltimore	Dec. 14, 1852	9474
Spike-machine	P. P. Trayser	Baltimore	July 19, 1853	9866
Spinner, Rug	D. Hunter	Laurel Factory	July 23, 1841	2184
Spinning wool	Sykes and Conradt	Fredericktown	March 3, 1836	—
Spinning wool	W. Sykes and G. M. Conradt	Fredericktown	May 10, 1834	—
Spinning wool	J. Withered	Baltimore	March 20, 1836	—
Spiral spring applied to traces, single trees, &c., Elastic	J. Sherfy	Uniontown	July 22, 1833	—
Spur	C. C. Reinhardt	Baltimore	June 24, 1843	3142
Steamboat, Ice	R. Irvine	Baltimore	Jan. 12, 1832	—
Steam-boiler	R. Hooper	Baltimore	Aug. 9, 1859	25017
Steam-boiler explosions, Preventing	A. B. Quimby	Hagerstown	Oct. 1, 1830	—
Steam-boiler, Safety	L. P. Clark	Baltimore	May 20, 1838	762
Steam-boilers, Construction of	J. Montgomery	Baltimore	Jan. 10, 1860	26779
Steam-boilers, Furnace for heating	G. Bantz	Frederick	June 22, 1858	20616
Steam-boilers, Mechanical means for preventing incrustation in	J. McMullen	Baltimore	May 23, 1854	10964
Steam-boilers, Method of blowing off	J. H. Washington	Baltimore	Jan. 25, 1859	22757
Steam-boilers, Preventing accident from explosion of	P. C. Frese	Baltimore	April 10, 1839	1118
Steam-engine	B. S. Benson	Baltimore	July 10, 1847	5185
Steam-engine for vessels or vehicles used in inclined planes, rivers, &c.	J. Stimpson	Baltimore	Aug. 23, 1831	—
Steam, Engine or machinery to supersede the use of	L. Marchand	Baltimore	June 14, 1834	—
Steam-engines, Regulating the waste steam in locomotive	R. Winans	Baltimore	Nov. 26, 1840	1868
Steam-engines with propellers of steam vessels, Connection of	R. & T. Winans	Baltimore	Oct. 26, 1858	21920
Steam for actuating engines, Use of	C. E., J. and S. Wethered	Baltimore	Sept. 27, 1853	10054
Steamers, Construction of Ocean	R. & T. Winans	Baltimore	Oct. 26, 1858	21919
Steering-wheel for vessels	P. T. Share	Baltimore	Nov. 28, 1842	2865
Stock, Neck	W. Carlock	Baltimore	Aug. 9, 1831	—
Stone drilling and splitting machine	J. H. Lyon	Baltimore	July 13, 1858	20885
Stone-sawing machine	J. Grason	Queenstown	July 1, 1856	15230
Store, building, &c.	I. Knight	Baltimore	May 23, 1836	—
Stove	H.D. & J.M. Fouse	Baltimore	June 27, 1846	4601
Stove	J. H. B. Latrobe	Baltimore	Sept. 5, 1846	4744
Stove	H. R. Robbins	Baltimore	March 29, 1859	23396
Stove	G. H. Russell	Baltimore	May 31, 1859	24241
Stove	C. C. Schieferdecker	Baltimore	Nov. 8, 1859	26058
Stove	S. B. Sexton	Baltimore	April 19, 1859	23716

UNITED STATES PATENTS—*Continued*

Invention	*Inventor*	*Residence*	*Date*	*Number*
Stove, Air-tight	S. B. Sexton	Baltimore	June 19, 1847	5158
Stove and range, Cooking	S. B. Sexton	Baltimore	Oct. 2, 1860	30254
Stove-boiler, chimney, &c., Steam	J. J. Giraud	Baltimore	March 8, 1830	—
Stove, Coal	W. H. Stinson	Baltimore	Oct. 6, 1857	18362
Stove, Cooking	S. Bentz	Boonsborough	March 9, 1844	3470
Stove, Cooking	S. B. Sexton	Baltimore	April 29, 1842	2587
Stove, Cooking	S. B. Sexton	Baltimore	Sept. 23, 1843	3273
Stove, Parlour air-heating	L. W. Gosnell	Baltimore	April 2, 1850	7239
Stove with revolving oven	I. N. and N. P. Haywood	Baltimore	May 8, 1843	3076
Stoves, Mode of constructing	W. J. Duval	Baltimore	March 28, 1838	665
Straw-cutter	J. S. Eastman	Baltimore	Feb. 15, 1838	600
Straw-cutter feed-roller	R. Sinclair, Jr. and R. F. Maynard	Baltimore	Nov. 15, 1853	10238
Straw-cutter feeder	J. E. Erb	Baltimore	July 2, 1850	7473
Street sprinkling apparatus	J. D. Price	Smithsburg	April 9, 1850	7273
Sugar-cracking machine	S. H. Murrill	Baltimore	July 26, 1859	24910
Sugar-grinding mill	G. I. Price	Frederick City	Aug. 14, 1860	29618
Superheater, Steam	S. N. Carvalho	Baltimore	Jan. 3, 1860	26731
Tackle block, Spring	O. Hussey	Baltimore	Dec. 28, 1858	22432
Tailoring, Art of	J. Zwisler, Jr.	Hagerstown	July 1, 1836	—
Tanning	W. Brown	Manchester	Aug. 1, 1844	3688
Tanning	M. W. Jenkins	Baltimore	March 10, 1834	—
Tanning-apparatus	W. H. Heald	Baltimore	Sept. 18, 1860	30062
Teaching geography and astrography, Apparatus for	R. Piggot	Elk Ridge Landing	Jan. 17, 1842	2426
Teeth, Artificial	A. A. Blandy	Baltimore	Jan. 20, 1857	16433
Teeth, Casting plate for artificial	A. A. Blandy	Baltimore	March 3, 1857	16708
Teeth, Casting plates for alloys for artificial	A. A. Blandy	Baltimore	March 10, 1857	16784
Telegraph, Electro-chemical	C. Westbrook and H. J. Rogers	Washington, D.C. and Baltimore	May 28, 1850	7406
Telegraph lightening arrester	D. F. S. Ways	Baltimore	Aug. 7, 1860	29533
Telegraph, Signal	H. I. Rogers	Baltimore	Sept. 27, 1844	3765
Tenoning-machine	E. M. Shaw	Baltimore	Aug. 6, 1850	7549
Theodolites, Measuring distance with	S. Stone	Long Green	June 6, 1835	—
Thorough-brace	F. Davis	Baltimore	Nov. 6, 1834	—
Thrashing and cleaning machine, Clover seed	W. Rowe	Frederick	Aug. 25, 1838	893
Thrashing-machine	S. Fahrney	Boonsborough	May 9, 1831	—
Thrashing-machine	N. Goldsborough	Easton	May 6, 1836	—
Thrashing-machine	F. & H. Grieb	Hagerstown	Oct. 19, 1838	985
Thrashing-machine	J. Matthias	Manchester	Aug. 27, 1834	—
Thrashing-machine	D. G. McCoy	Dublin	March 20, 1835	—
Thrashing-machine	J. B. Palmer	Baltimore	July 20, 1831	—

Thrashing-machine	J. Whitehille	Frederick Co.	April 22, 1835	—
Thrashing-machine and clover-seed machine	S. West	Harford Co.	March 1, 1833	—
Thrashing-machine and straw-cutter	J. Stewart	Cambridge	Nov. 17, 1834	—
Thrashing machine, Grain	S. West	Harford Co.	Nov. 11, 1834	—
Thrashing-machine teeth	J. Wrightston	Tobacco Stick	May 17, 1839	1153
Thrashing-machine, Casting cylinders for	E. Whitman and L. Whitman	Baltimore and Winthrop, Me.	Aug. 21, 1860	29738
Tobacco, Manufacturing chewing	E. Chassaing	Baltimore	March 24, 1835	—
Tobacco-press	J. Bucey	West River	Dec. 23, 1841	2398
Tobacco-press	T. G. Hardesty	Tracy's Landing	May 29, 1841	2113
Tobacco-press	W. R. Musser and J. Coleman	Baltimore and Lynchburg, Va.	Feb. 2, 1858	19256
Tobacco-press	E. Richardson	West River	July 16, 1841	2170
Tobacco-press	J. H. Washington	Baltimore	Oct. 12, 1837	424
Tobacco-press	J. W. Weems	West River	Dec. 15, 1835	—
Track, Railway	B. H. Latrobe	Baltimore	Oct. 8, 1840	1808
Truck for raising stone, Double-cylinder	S. Frieze	Waterloo	Aug. 23, 1834	—
Truck, Locomotive	J. Cochrane	Baltimore	Feb. 6, 1855	12358
Truck, Railway-car	I. Knight	Baltimore	June 12, 1849	6524
Truss	J. C. Earle	Baltimore	March 19, 1831	—
Truss	H. G. Jamieson	Baltimore	Aug. 29, 1833	—
Truss	J. Knight	Baltimore	Dec. 14, 1830	—
Truss	C. C. Reinhardt and V. Carter	Baltimore	Sept. 24, 1844	3760
Truss, Double-spring	D. Weaver	Baltimore	Nov. 19, 1833	—
Truss-pad	W. F. Dailey	Baltimore	April 13, 1858	19914
Truss-pad, Glass or earthen	C. C. Reinhardt	Baltimore	Oct. 7, 1856	15858
Tubular boilers for generating steam, Constructing	C. W. Bentley	Baltimore	Sept. 1, 1843	3244
Tuning piano-fortes	J. J. Wise	Baltimore	Nov. 19, 1833	—
Umbrella	C. Boernicke	Baltimore	Aug. 31, 1858	21313
Valve and cam of steam-engine boilers	J. Kirkpatrick	Baltimore	May 29, 1835	—
Valve, Raising puppet	W. Duff and T. Murphy	Baltimore	Feb. 17, 1836	—
Valve, Self-balance steam	J. Kirkpatrick	Baltimore	July 10, 1834	—
Valve, Steam-boiler safety	W. Duff	Baltimore	July 28, 1843	3202
Valve, Steam-engine foot	S. W. Rogers	Baltimore	Oct. 2, 1849	6761
Valve, Steam-engine slide	J. Kirkpatrick	Baltimore	Sept. 22, 1837	399
Valve, Steam-engine slide	T. Winans	Baltimore	June 20, 1857	17712
Valves, Arrangement of and means for operating slide	W. M. Henderson	Baltimore	April 8, 1856	14611
Valves, Operating puppet	J. Kirkpatrick	Baltimore	Sept. 25, 1837	400
Vehicle running-gear	R. Murdock	Baltimore	July 10, 1860	29093
Vessel, Steam	R. & T. Winans	Baltimore	Oct. 26, 1858	21918
Vessels, Hull of steam	R. & T. Winans	Baltimore	Oct. 26, 1868	21917
Vessels, Lightening sea-going steam	J. C. F. Saloman and G. W. Morris	Baltimore	Jan. 5, 1858	19047

UNITED STATES PATENTS—*Continued*

Invention	*Inventor*	*Residence*	*Date*	*Number*
Vessels, Ventilating and purifying the air in	J. Remington	Baltimore	March 1, 1832	—
Vise	S. Fahrney	Boonsborough	June 3, 1856	15051
Wagon, Buggy	T. Winans	Baltimore	Jan. 29, 1856	14174
Warming apparatus	L. A. Colbert	Baltimore	Nov. 13, 1860	30614
Warp-dressing machine	R. Pilson	Laurel	Oct. 20, 1860	30543
Washing-apparatus	J. T. King	Baltimore	Oct. 21, 1851	8446
Washing-machine	J. Allen	Galena	Sept. 14, 1858	21476
Washing-machine	M. Chase	Baltimore	Jan. 23, 1846	4361
Washing-machine	S. W. Cole	Millington	Oct. 5, 1858	21653
Washing-machine	A. Huffer	Hagerstown	May 26, 1857	17377
Washing-machine	A. Huffer	Hagerstown	Nov. 17, 1857	18642
Washing-machine	E. Lukens	Baltimore	March 9, 1844	3472
Watches, Duplex escapement in	C. Jacot des Combes	Baltimore	April 30, 1840	1570
Water, Conveying	S. Hant	Baltimore	March 31, 1836	—
Water-heater for steam-boilers	R. Winans	Baltimore	July 29, 1837	309
Water-raising apparatus	D. Winder	Hagerstown	June 26, 1847	5179
Water-ram	J. L. Gatchel	Elkton	April 17, 1849	6368
Water-wheel	N. F. Burnham	Laurel Factory	Feb. 22, 1859	23011
Water-wheel	C. S. Mercer	Franklin	March 30, 1836	—
Water-wheel, Current	W. Miles	Boonsborough	Oct. 26, 1842	2836
Well boring implement	I. J. W. Adams	Sharpstown	Jan. 30, 1855	12303
Wharves, Constructing	A. Stevens	Baltimore	March 1, 1859	23122
Wheat, Machine for rubbing and separating garlic, &c., from	Z. Duval, A. Calligan and J. W. Miller	Ellicott's Mills	Nov. 3, 1838	996
Wheat prepatory to grinding, Hulling	S. Bentz	Boonsborough	Sept. 19, 1848	5777
Wheat, rice, &c., Rubbing and hulling machine for	A. and W. I. Duvall	Baltimore	Jan. 9, 1838	567
Wheat, &c., Rubbing	S. N. H. and W. Ellicott	Ellicott's Mills	July 31, 1833	—
Wheels from falling when axles break, Apparatus to prevent	W. Zollikoffer	Middleburgh	April 30, 1833	—
Wig	F. Deville	Baltimore	Sept. 17, 1842	2781
Windlasses and capstans, Method of working ship's	W. Holmes	Baltimore	March 23, 1842	2508
Windmill	I. Garver and A. Fahrney	Boonsborough	Dec. 28, 1840	1914
Windmill, Self-regulating	J. Elgar	Baltimore	July 10, 1855	13244
Window-catch	J. W. Batson	Baltimore	Aug. 1, 1848	5693
Winnower, Grain	S. Canby	Ellicott's Mills	Aug. 9, 1853	9913
Winnowing-machine	S. Canby	Ellicott's Mills	Dec. 28, 1852	9500
Winnowing-machine	J. & J. Montgomery	Baltimore	Jan. 20, 1857	16447
Winnowing-machine	J. Nichols	Kent. Co.	June 15, 1835	—
Winnowing-machine	J. Shermer	New Valley	July 20, 1846	4648

Writing by a construction of fountain-pens adapted to writing on a guide formed of ground glass	W. Davidson	Baltimore	Oct. 9, 1841	2287
Writing-fluid, Blue	H. King	Baltimore	Nov. 7, 1839	1400
Wrought nails and spikes, Machine for making	J. McCrone	Ellicott's Mills	Feb. 21, 1840	1497
Yarn for the manufacture of duck and other coarse fabrics, Preparing cotton	H. N. Gambrill	Baltimore	June 15, 1852	9021

BOOK REVIEWS

Maryland: A Geography. By James E. DiLisio. (Boulder, Colorado: Westview Press, 1983. Pp. xviii, 233. Illustrations, Appendix, Selected Bibliography.)

This is a handy and useful survey of Maryland written from a geographer's point of view. It contains a wealth of information about our state's population and other economic resources. The text is straightforward, abundant figures and tables complement the author's ideas, and the index is excellent. As might be expected, the focus is on twentieth-century Maryland and the author makes excellent use of statistical surveys generated by various state agencies during the 1970s. It thus gives us a good sense of where we are now and the title of the last chapter is "Future Prospects."

The book is part of a series of state *Geographies of the United States*, edited by Ingolf Vogeler, and the author is chairman of the Department of Geography and Environmental Planning at Towson State University. Not surprisingly, he teaches the geography of Maryland. The format of the book is quite easy to follow. Divided into eight substantive chapters, DiLisio begins by placing Maryland in the national and regional context of the United States and discusses the concept of our state as "America in Miniature." He then describes the land, its various uses, and recent environmental concerns. The third chapter details how the land is used in such primary activities as agriculture, fishing, and mining. Did you know that prime agricultural land covers one-third of Maryland, or that forests cover one-half our land while the national average is one-third? DiLisio then discusses manufacturing, recreation and tourism, and sometimes compares Maryland's position to that of other states or to national averages.

Readers of this *Magazine* should find chapter 5 especially interesting. Entitled "Maryland's Past in Today's Landscape," DiLisio examines our past from the perspective of the present. Several historical trends virtually leap out at the reader. As early as 1910's census figures industry transplanted foreign commerce as Baltimore's leading activity. And since that time all regions of Maryland have "become structurally interlinked and focused on Baltimore" (p. 150). Also, the fastest growing region since World War II has been the Baltimore-Washington corridor. Yet the author is careful to point out that Maryland's regions have not lost their distinctive features. Chapter 6 discusses various aspects of Maryland's population, its socioeconomic characteristics, ethnicity, and the like, while chapter 7 describes such services as government, transportation, communications, and health care. The last substantive chapter discusses Maryland's urban system and focuses on the 1960s and 1970s.

What are DiLisio's main conclusions? "The major binding element in Maryland [in the 1980s] is the urban system that focuses on the Baltimore-Washington urban corridor. As much as people on the Eastern Shore or in western Maryland would like to protect their life-styles from the strong and spreading development of the urban corridor, they ultimately depend upon that conurbation for their livelihoods" (p. 211). "A major problem for Maryland in the future will be a mismatch between skills of the labor force and skills needed in the growth sectors. Even today [early 1980s] there are more unskilled and semiskilled workers than there are jobs, while there are more jobs for skilled workers, craftsmen, and technical and managerial personnel than there are persons to fill them" (p. 212). DiLisio has given us a comprehensive view of Maryland, shown us the historical roots of our present, and reveals some of the problems that we may face in the future. That part is to his credit; but conurbation? Really!

GARY L. BROWNE
University of Maryland, Baltimore County

Chesapeake Waters: Pollution, Public Health, and Public Opinion, 1607–1972. By John Capper, Garrett Power and Frank R. Shivers, Jr. (Centreville, Md.: Tidewater Publishers, 1983. 174 pp. Indexed. $19.95)

This is an excellent little book covering a large and complex subject by three authors who know the Chesapeake very well. Considering the very extensive literature on the Bay, it seems odd that no one has heretofore written a history of the Chesapeake as a body of water. It is, in the main, a narrative history of the increasing encroachments of human beings on the Bay, the increasing effects of these human activities on the waters and marine life, and the relatively recent attempts to understand and regulate these effects in order to prevent the degradation of this great resource. This is not a coffee table

book—long on glossy illustrations and short on information. *Chesapeake Waters* is based on solid research and careful analysis.

The first several chapters describe the many uses to which the Bay has been put by many generations of Marylanders and Virginians and the attitudes that underlie these activities. There is, it appears, remarkable continuity of attitudes and activities over the 365 years. Certainly from the mid-18th century onwards Bay area residents have used the estuary as a water highway, fishing hole, pleasure boating resort, bathing facility, factory site and sewer receptacle. Until very recently, there was almost universal agreement that this "Noble arm of the sea" as Lord Morpeth called it in 1842, was so large that its constantly moving waters would easily support any and all demands made along its 8,000 miles of shoreline. Indeed, for the first 250 years or so the relatively small regional population and their little waterside or riverside factories made only a minor impact on the Bay. By the 1870s and 1880s, however, concerns were growing over the decline of the shad and herring fishing and the great decline in oyster harvests had begun, but this was due primarily to overfishing rather than environmental factors of water quality. It was not until the 1890s, with the acceptance of the germ theory of disease and the accumulating residue of Maryland's and Virginia's industrial and human waste, that the first faint visions of a general decline of the Bay appeared. Prior to this era waste disposal and siltation in the Bay were regarded simply as temporary local nuisances.

The absence of any perceived threat to the Bay or its rivers as a whole did not mean that local or state governments ignored the protection of their waters. Regulation of the Bay and tributaries by Maryland, Virginia and their respective local governments goes back into the 18th century as this study ably documents. There was a patchwork quality to the welter of state and local regulations governing uses of the water and shorelines, and the two state governments very early took separate roads in their management policies—a legacy that still causes problems; but it is clear from the evidence presented that both Maryland and Virginia have long recognized the right of state and local governments to control the use of rivers and the Bay to protect public health and economic interests dependent on the water. The difficulty with protecting economic interests was the increasing conflict between the watermen who harvested oysters (along with the smaller fishing groups) and the industrial concerns and municipalities which saved substantial amounts of money by dumping their waste into the Bay. The first really major legal and political battles came in the 1893–1905 era when typhoid fever was traced to polluted oysters and Maryland's watermen forced Baltimore to build what became the world's most advanced sewage treatment plant. The chapter dealing with this landmark incident, inconspicuously entitled "Sewage and Shellfish" is one of the most fascinating sections of the entire book. This turn-of-the-century illustration of the complex political, economic and technological factors involved in what we call today the environmental issue was to be replayed many more times and continues to make headlines today. Further problems with polluted oysters in the early decades of the twentieth century forced the closing of oyster beds and substantial losses to the watermen. In Maryland, where the watermen were a potent political force, the state was one of the nation's leaders in sewage treatment while Virginia, with a less effective oyster lobby, lagged behind. On the other hand, Virginia had adopted an extensive system of privately leased oyster beds while Maryland, again at the behest of the watermen, remained essentially a free-for-all hunting ground. The result in Maryland was continuous overharvesting and steady, enormous decline in volume. Maryland today harvests only a small fraction of its peak harvests of the 19th century. Unfortunately, this volume is a bit skimpy on statistical data so there are no time series figures on oyster harvests in either Maryland or Virginia.

The last half of the book is devoted to the period from about 1940 to 1972. During this thirty year period there was an unprecedented leap in Bay-area population (again no exact numbers are provided), in industrial and recreational uses of the Bay, in dredging, shipping, shore-line building and silting. It was also the era in which knowledge of the Bay and its tributaries escalated—far more studies being published between 1950 and 1972, it appears, than during the previous 343 years of European settlement. There is an admirably clear and sufficient presentation of the major controversies surrounding the general ecological health of the Bay and its rivers, the incredibly complex legal and bureaucratic system that has grown up in Maryland, Virginia and at the Federal level to study and regulate Bay-related activities, and the fascinating scientific/technological debates between the Bay scientists (who have seldom agreed either on findings or policy). This section of the book provides, so far as I know, the best overall introduction to the Chesapeake Bay environmental issue that has yet appeared in print.

The authors have succeeded in presenting a remarkably objective discussion of the issues which have been so hotly debated in recent years. They have pointed out the dilemma faced by administrators, legislators and concerned citizens who were forced to make decisions regarding the future of the Bay in the face of inadequate and conflicting scientific evidence. It is understandable, but disappointing that the book ends in 1972, just at the time when the Environmental Protection Agency, the United States Army Corps of Engineers and several other major agencies, began to publish the results of their massive studies of the Bay. But even if the story had been brought up to 1982 the general conclusion of the authors would still stand. The incredible complexity of the Bay and its rivers still makes it very difficult to know with certainty the effects of many individual alterations in the Bay environment by mankind, even though great progress has been made in the analysis of local Bay environmental impacts. We are still, however, very far away from even guessing at the long-term *cumulative* effects of our actions on the Bay as a whole.

The last, but not the least important thing to be said of this book is that it is quite well written—vastly superior to most of the turgid reports and studies upon which the authors drew to produce the volume. This is a book which any informed laymen can read, but at the same time it presents information and ideas that professional scientists and administrators would find interesting and useful. For those wishing further information, as many will in view of the brevity of the book, the footnotes and the 150 or more items appearing in the bibliography provide an excellent introduction to the voluminous literature on the Bay and its principal rivers. Anyone who is curious about the history of the Chesapeake or concerned about its present and future condition must read this book.

JOSEPH L. ARNOLD
University of Maryland
Baltimore County

Industrial Evolution: Organization, Structure, and Growth of the Pennsylvania Iron Industry, 1750–1860. By Paul F. Paskoff. (Baltimore: Johns Hopkins University Press, 1983. 182 pp., tables, maps, index. $22.00.)

The growing sophistication of economic history is well illustrated in Paul Paskoff's *Industrial Evolution*, a modern analysis of the emergence of the iron industry in the eighteenth and nineteenth centuries. A product of the Johns Hopkins University graduate program and supported by the Regional Economic History Research Center of the Eleutherian Mills-Hagley Foundation, this study constitutes a quantum leap forward in the study of the evolution of the basic ingredient in American industrialization. For students of Maryland history this book is more than merely the analysis of a neighboring state's iron manufactories, it is a road map toward a new synthesis of the same industry's development in the northern Chesapeake region.

The traditional analysis of the iron industry, especially in colonial America, has been based on literary sources and not upon a detailed analysis of business records. A thorough inspection of such mundane documents allows Professor Paskoff to arrive at innovative, quantitatively based conclusions. His fundamental thesis that the robust state of the iron industry in 1860 was the product of a gradual evolution from a strong colonial and early national era base rather than the consequence of a dramatic revolution or, according to the theory of W. W. Rostow, a rapid "take-off" in the 1840s.

Although not the principal purpose of this book, its comparisons of the colonial Chesapeake iron industry with that of Pennsylvania are particularly interesting. During the second third of the eighteenth century Maryland and Virginia dominated charcoal-fired iron manufacturing and exported most of their product to Britain. The Pennsylvania iron masters, confined by geography to locate away from the tidewater, concentrated on domestic sales. The emergence of coal-fired British iron manufactories after the French and Indian war resulted in a lowered demand for the Colonial pig and bar iron and contributed to the decline of the Chesapeake iron industry. Meanwhile, Pennsylvania's locally-oriented iron works expanded until that colony achieved dominance in manufacture of iron products.

Paskoff finds more to Pennsylvania's rise than the emphasis on the domestic market. His close examination of business ledgers results in an important revision of traditional views on pre-industrial capitalism: Pennsylvania entrepreneurs made an effective transition from a mercantile to an industrial technique by improving productivity in an era of static technology. Quality control improvements in such areas as woodcutting, charcoal production, running pig iron, and drawing bar iron all contributed to these developments.

Unlike what we might intuitively believe, Paskoff argues that the War for Independence inhibited iron manufacture, but the peacetime years brought a rapid expansion, particularly in the Pittsburgh area. By the 1850s there were four basic regional production areas: the contin-

uation of colonial iron works in the southeastern counties, the newly developed facilities in the anthracite coal fields, the Juniata valley works in the central part of the state, and the upper Ohio valley operations. Simultaneously, he finds a growing diversification in organizational structure with individual proprietorships being gradually, but not decisively, replaced by partnerships and companies. Moreover, as one moves up the technological hierarchy of ironworks, the company form becomes increasingly the most dominant one. Thus, company enterprises tend to achieve more output per furnace and to involve higher levels of capitalization. There were regional differences in this arrangement with the western operations utilizing the company form more commonly than those in the eastern portion of the commonwealth.

But, company enterprises were not innovative leaders prior to 1850 either in technological change or capacity, nor were they more efficient. This is because demand, not capacity, was the principal determinant of efficiency prior to mid-century and the demands of iron-making could still be met by the older organizational systems. Still, company organization was the wave of the future and in the decade before the Civil War there occurred a "creative destruction" (to use Joseph Schumpeter's term) of the older forms and technology so that while only one-third of the iron firms were companies, they produced over half the industry's output. This critical decade witnessed a growing concentration of ownership and increased integration of furnaces and forges with rolling mills. Integrated firms survived better because of a greater capacity to respond to changing market conditions.

Paskoff agrees with Rostow that the railroad generated demand for iron products was the critical factor in industrial expansion. Here he contradicts the conclusions of Robert Fogel and Albert Fishlow who find no correlation between railroad demand and increased capacity. While Fogel and Fishlow may be correct in an aggregate basis since the demand for nails exceeded that for rails, Paskoff notes that the demand for rails and boiler-iron had more than a quantitative impact on the iron industry. The railroad demand imposed organizational and technological changes forcing integration, concentration, and large capital requirements that marked the wave of the future.

Thus we return to the Paskoff thesis: "The passage of Pennsylvania ironmaking from a small, scattered number of furnace and forge owners to the extensive, complex, and increasingly powerful industry of 1860 was for the most part a transformation by accretion" (p. 132). *Industrial Evolution* is not an easy book to read. Filled with over sixty tables and figures, it is clearly the product of the new quantitatively based economic history and is written mostly for specialists. But its conclusions are important and deserve wide dissemination.

Moreover, this volume poses an important challenge to students of Maryland history. We must go beyond the individual firm studies of Keach Johnson on the Baltimore Company and Michael Robbins on the Principio Company to an analysis of the industry as a whole. What was the exact relationship between the tobacco trade and the colonial Chesapeake iron industry? Was this transatlantic commerce more economically vulnerable than the coastwide trade in iron products out of Philadelphia? Did Maryland ironmasters achieve the same efficiencies as Paskoff documents for Pennsylvania or did slavery inhibit such experimentation? What was the impact of the Revolution and the westward movement on the decline of the Chesapeake iron industry? These questions beg answers and open the vast archival collections of Maryland to innovative analysis and interpretation along the lines begun by Paskoff. At the same time Marylanders must be cautious in using Paskoff's comments about the state. He confuses the various Carrolls several times. His Map 1 (p. 44) does not even show all the iron production facilities documented in Robbins' dissertation, a list which is probably fragmentary. But this only indicates the incompleteness of our present data. The Ridgelys, Dorseys, and Johnsons are only a few of the early ironmasters about whom we need more information.

Particular notice should also be given to Glenn Porter of the Eleutherian Mills-Hagley Foundation and to the Johns Hopkins University Press for the handsome production of this third volume in the "Studies in Industry and Society" series. The Foundation's assistance undoubtedly contributed to this situation. Let us hope this series will be continued and that future volumes will contain several Maryland subjects.

DAVID CURTIS SKAGGS
Bowling Green State University

Latent Image: The Discovery of Photography. By Beaumont Newhall. (Originally published by Educational Services, Inc., Garden City, NY, 1967). (Albuquerque, NM: University of New Mexico Press, 1983. 138 pp., illus., biblio. and index. $6.95.)

Beaumont Newhall is considered by many as the dean of photographic history, having written numerous volumes on the subject. *Latent Image*, originally written for the budding high school

science student, and long out of print, has become a standard reference on the international events and personalities involved with the early discoveries of photographic processes. Newhall begins with a brief introduction of early experimenters, for example, Thomas Wedgwood, of England, and then moves quickly on to the major figures of the 1820s and 30s: Louis Daguerre, Nicephore Niepce in France and William Henry Fox Talbot in England. Besides these stellar figures, other people, including Mongo Punton of Scotland and Matthew Carey Lea, of the United States, are presented with discussion of their contributions. At the same time, however, the "lesser-knowns" are often given short shrift in favor of Newhall's favorite, Talbot.

Because it was intended as a student text, the writing is, at times, very simple. This style, however, combined with Newhall's straightforward and simple narrative, achieves an easy understanding by the non-scientist. Chapter sources, rather than footnotes, also add to the simplicity of the discussion. It is good to see this work back in print and is recommended reading for anyone involved with photographic collections.

LAURIE A. BATY
Maryland Historical Society

In Search of the Carrolls of Belle Vue

ROBERT F. McNAMARA

CHARLES CARROLL "THE ATTORNEY General" (1660–1720) had two sons who married and established durable family lines in Maryland. The better known of these lines is that of Charles Carroll of Annapolis (1702–1782), particularly because he fathered the signer of the Declaration of Independence, Charles Carroll of Carrollton (1737–1832). The lesser known line is that of Daniel Carroll of Duddington (1707–1734). Daniel's son Charles Carroll of Duddington II and Carrollsburg (1729–1773) had three sons, Daniel Carroll of Duddington II (1764–1849), Henry Hill Carroll (?–1804), and Charles Carroll of Belle Vue. Daniel II achieved considerable note as a Washington landowner and business man.

The focus of this article is Charles Carroll of Belle Vue. In the past he has been mentioned only peripherally in genealogical discussions of his more famous cousin the Signer.[1] One reason for his obscurity in Maryland history is that he moved to New York State in 1815. There, however, he won esteem, particularly as one of the co-founders of the city of Rochester, New York.

In the course of research on this Charles Carroll as Rochester's co-founder, I have uncovered a fair amount of previously scattered material about him, his wife and his eight children. Because the backgrounds of Charles and Ann Sprigg Carroll are so little known, I shall first summarize their lives. Then I shall recount what I have discovered about their eight children, all natives of Maryland. Finally, I shall mention briefly, and more tentatively, their children's children.

The Rev. Robert F. McNamara is archivist of the Roman Catholic Diocese of Rochester, New York.

CHARLES CARROLL OF BELLE VUE (1767–1823)

Charles, the third son of Charles Carroll of Duddington II and Carrollsburg and of Mary Hill (1744–1822), was born on November 7, 1767 in his father's manor house at "Carrollsburg," north of the Anacostia River, in what is now Washington S.E.[2] The family was Roman Catholic, but the Jesuit baptismal records for that missionary district have apparently been lost.

Charles' father sent his son to Liége, Netherlands, when he was fifteen, to attend the *collège* or preparatory school conducted there by a group of English ex-Jesuits. (The Liége academy was the direct descendant of the college opened by English Jesuits at St. Omers, France, in 1593. Because it was forbidden in post-Reformation England to conduct Catholic academies within the British Isles, many prosperous Catholic recusants in Britain and Maryland sent their teen-age sons to this institution.) Charles was on the student list at Liége from August 27, 1783 to September 10, 1785. Having doubtless toured Europe during the sixteen months that followed, he was back in Maryland by March 13, 1787. Luckily, he got home alive: as the Signer wrote to Charles's brother Daniel, "the ship he came passenger in was cast away off Cape Hatteras, no lives lost."

The family plan seems to have been that Charles, still only nineteen, would study law. This plan apparently fell through, for he was never in later life referred to as an attorney. But on reaching his majority in 1788, he came into possession of three estates in old Frederick County that his father had left him.

However, Charles chose to start off in Washington County, sliced off from the original Frederick County in 1776. On May 16, 1789, he purchased, near the bustling

THE CARROLLS OF BELLE VUE*

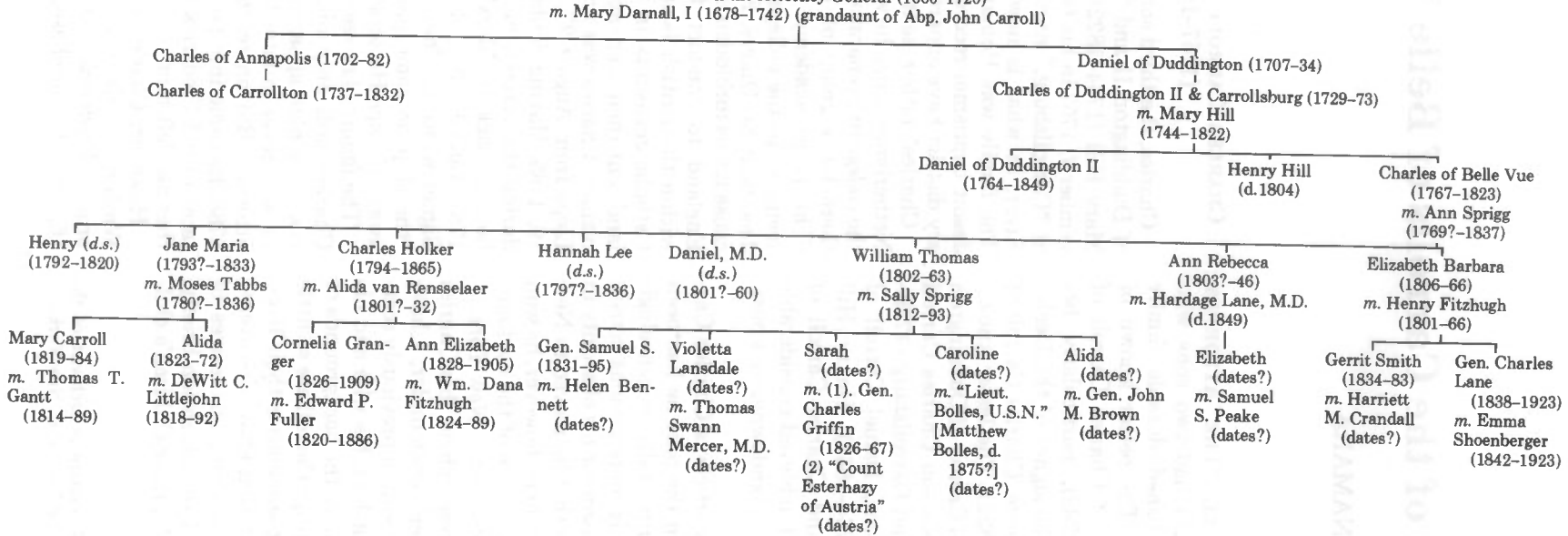

* This simplified chart lists only those Belle Vue grandchildren known to have married.

frontier center of Hagerstown, Maryland, the first portion of what became an estate of well over 1000 acres. Here he built a very large stone house (no longer extant) which he named "Belle Vue." (He was always careful to spell it in two words.) From that time on he signed himself "Charles Carroll of Belle Vue." Not long after the young squire had purchased the plantation he married Ann Sprigg.

Charles of Belle Vue quickly won the respect of the people of Hagerstown. It was not only his wealth, but his agricultural and entrepreneurial skill, his leadership, his civic spirit, and his pleasant personality, that made him an attractive figure. In 1802 he was named one of the county judges of elections; in 1807 he was elected to the board of the new Hagerstown Bank; in 1808 he became a founder and the first treasurer of the Washington County Agricultural Society. In 1794, after the state militia was organized, he was named major of the 8th Regiment, Washington County Militia, and was re-commissioned on May 25, 1797. Later on, he resigned—perhaps in 1802, when he was already thinking of leaving Maryland. Nevertheless, Charles was usually referred to thereafter by the title "Major," especially when he lived in New York State.[3]

Meanwhile, Major Carroll had taken an active part in establishing a Catholic church in Hagerstown, and in manfully trying to keep it going, despite the small number of Catholics in the parish and their small means.

From 1799 on, Charles became interested in the lands recently put up for sale in the Genesee Country of western New York. He and his brother Daniel of Duddington first rode north on a tour of inspection in 1799. Though Daniel was not impressed, Charles was much attracted by the agricultural and speculative worth of the Genesee lands; so he made another trip there in 1800 with his close friends and Hagerstown business associates, Col. Nathaniel Rochester (1752–1831) and Col. William Fitzhugh, Jr. (1761–1839). All three made considerable real estate purchases. On another visit in 1803, the same trio bought a mill-lot of 100 acres near the falls of the Genesee River, a short distance south of Lake Ontario.

All three men intended to remove to upstate New York soon after concluding their land purchases. Col. Rochester did so in 1810. Circumstances prevented Carroll and Fitzhugh from following him until after the War of 1812. In 1811–1812, Nathaniel Rochester, acting as the agent of the three co-owners, laid out "Rochesterville," which eventually became the city of Rochester. The co-founders worked in close collaboration with the Colonel; and it was they who recommended that he name the little milling village after himself.

It was also in 1811 that Charles moved his family from Hagerstown to the District of Columbia. Here he became involved in a family milling project, and was chosen a director of the Capital's first bank, the Bank of Washington. Soon he was able to purchase the Nourse mansion in Georgetown—a handsome residence that is today the headquarters of the National Society of the Colonial Dames of America. In later times it has been called "Dumbarton House;" but Major Carroll, on acquiring it, gave it the same name as that of his rural mansion,"Belle Vue."

As a prominent Washingtonian, Major Carroll was rather well acquainted with President James Madison and his remarkable wife, Dolley. When the British invaded Washington during the War of 1812, Carroll assisted Dolley in her flight from the White House. In a letter she wrote that day Dolley acknowledged his solicitude (and his impatience).

Finally, Charles and his family trekked north early in 1815 and settled at a ghost town called Williamsburg, in the town of Groveland, now in Livingston Co., New York, where his larger estate lay. He was joined in 1817 by the Col. William Fitzhughs. The Major and the Colonel had purchased jointly a total of 12,000 fertile acres. Neither ever resided in Rochester, some forty miles downstream. Both became Maryland planters in Yankeedom, squires in a lovely valley where the Wadsworths were the chief squires.

On this rural frontier Major Carroll was also the leading Roman Catholic. Conse-

quently, it was he who hosted the Albany priest who first visited the Genesee Valley in 1818. The result of the visit was the organization, in 1819, of the first Catholic church of the "Western District" of the New York Catholic Diocese. The church proposed was to be erected no farther "west" than Utica, N. Y.; but "Charles Carroll of Genesee River" was one of the trustees of its church corporation.

However, Major Carroll's removal to Groveland was not his last migration. In 1818, being financially pressed, he accepted an appointment from his old friend President James Monroe to be "Register of Lands for the district of Howard County, Missouri Territory." Associated with him in the new enterprise was his eldest son Henry. It may be that Charles also accepted this unusual post in order to initiate Henry, who had not yet settled down, into the arts of the land broker. Having given the power of attorney to his second son, Charles Holker Carroll, of Groveland, on October 18, 1819, the Major, his wife, and his three younger daughters set out on the long, long journey to his federal registry office located in (Old) Franklin, Missouri.

Henry had meanwhile been left in Franklin as his father's stand-in. While the father was back home getting ready to move, Henry had the misfortune to antagonize a large number of people. His critics, led by a Major Richard Gentry, complained about him to President Monroe, and demanded that Charles return, for they suspected the father of planning to pass on the post of register to the son. Their hatred of Henry reached such a peak that on February 29, 1820, Major Gentry shot him dead in an unwitnessed encounter. Charles had by then returned to Franklin, and fully accepted his son's refutation of the charges lodged against him by Gentry and his co-complainants. Heavy-hearted at the loss of his first-born, Major Carroll engaged top lawyers to prosecute Gentry. Gentry, however, had the good fortune to be defended by Thomas Hart Benton, the future senator. On March 21, 1821, the jury brought in a verdict of "not guilty." The whole event had bitterly divided Franklinites, for both Henry Carroll and Major Gentry were popular figures.

Charles's interest in Missouri waned after the death of his son, and in the fall of 1821 he resigned the office of register. A year later he was back in Groveland for good. His wife Ann and his daughters Hannah Lee and Elizabeth Barbara returned with him to the Genesee Valley, but Ann Rebecca remained in Missouri, having married a local physician.

Major Carroll's second sojourn in the Genesee Valley was unexpectedly brief. He died on October 28, 1823, and was buried in the Carroll plot of the old Williamsburg-Groveland cemetery. While the death of this rather nomadic Carroll was not given wide notice, the *National Intelligencer* of Washington spoke of him in terms that indicated he had not forfeited his earlier reputation as a man of refinement, ability and patriotism.

ANN SPRIGG CARROLL OF BELLE VUE (1769?-1837)

Major Carroll's wife Ann is buried beside him in the Williamsburg-Groveland cemetery. The original inscription on her stone read: "Ann Carroll, widow of Charles Carroll of Bellevue. Died at the Hermitage April 7, 1837, AE 68." An appended cemetery note identifies her as the daughter of Joseph and Hannah Lee Sprigg of Cedar Grove, Harper's Ferry.[4]

"Cedar Grove" must have been the name of her family residence. (It is not registered as the name of a patent.) While "Harper's Ferry" suggests that the Sprigg home was in (West) Virginia, the Maryland land patent index shows that Joseph Sprigg's lands, acquired several years before the Revolution, were in that part of Maryland's (Old) Frederick County which in 1776 became Washington County.[5] So Harper's Ferry was probably the postal address.

The founder of the Maryland Spriggs was Thomas Sprigg (1630-1704). His descendant Joseph Sprigg, Ann's father, was a native of Prince George's County, Md., and a lawyer by profession. He became a judge of the Orphans' Court for Washington County in 1777 and 1778; and in 1778 and 1782 he was listed as one of the justices of Washington County. Hannah Lee, his wife, bore

him nine children, of whom Ann was the seventh.[6] Judge Sprigg's older half-brother was Samuel Sprigg, who was governor of Maryland from 1819 to 1822.[7]

No details have emerged regarding the education of Ann. Her natural gifts and tastes were those of a rural homemaker. Shortly after Charles had moved his family to Georgetown, he wrote of her to Col. Nathaniel Rochester: "Mrs. Carroll does not like a city life, she finds it difficult to change old habits and would much rather be in the country attending to spinning &c."[8] Ann played the role of hostess, however, with natural gentility; and she seems to have passed this skill on to her daughters.

No record has been discovered of the place and date of Ann's marriage to Charles. Since her first child, Henry, was born January 4, 1792, the wedding must have taken place around 1790–1791. Traditionally, the Spriggs were an Anglican family; but the Carrolls raised their children in the faith of their father.

If Ann was not happy to move from Hagerstown to Georgetown, she was long opposed to moving from Georgetown to Groveland.[9] How her husband ever talked her into migrating to Missouri later on remains a mystery.

After the family's return to New York and Charles' death, Ann continued to live with her son Charles Holker Carroll in the original Carroll residence at Williamsburg. Then, in 1826, the junior Charles built an attractive frame plantation house in another section of his property. It was in this mansion, "The Hermitage," that Ann died.

Charles Carroll and Ann Sprigg Carroll raised eight children:

1. Henry Carroll
2. Jane Maria Carroll
3. Charles Holker Carroll
4. Hannah Lee Carroll
5. Daniel Joseph Carroll
6. William Thomas Carroll
7. Ann Rebecca Carroll
8. Elizabeth Barbara Carroll

The birth or baptismal records of none of these has turned up. It is known for certain that Charles Holker and Elizabeth were born at the Hagerstown Belle Vue; hence it is a fair assumption that all were born at the same residence.

1. Henry Carroll (1792–1820)

As noted, Henry Carroll was born January 4, 1792.[10] In 1809, his father enrolled him in the Roman Catholic seminary and college of Mount St. Mary, lately opened at Emmitsburg, Maryland. There Henry conceived a strong feeling that he was called to the Roman Catholic priesthood. While Charles was not opposed to such a vocation, he thought his son was still too young and inexperienced to commit himself. Therefore he removed him from Mount St. Mary's. Henry then transferred to St. Mary's College, a Baltimore Catholic institution (opened 1805, closed 1852). Here he was graduated in 1812 or 1813 with the B.A. degree.[11]

No more is heard of Henry until January 1814, when Henry Clay chose him as his private secretary before he set out for Europe to join the American and British diplomats who were working out a treaty to end the War of 1812. When the Treaty of Ghent was signed on December 24, 1814, Henry was picked as the courier to rush it back across the Atlantic to President Madison. As noted later on, the choice of Henry as secretary was possibly suggested to Clay by his close friend Moses Tabbs, who was by then Henry's brother-in-law. At all events, the family seems to have viewed the assignment as launching Henry Carroll on a diplomatic career. "A sort of first experience in diplomacy," was the way Henry's kinsman, Archbishop John Carroll, put it.[12] If it was Henry's "first experience in diplomacy," it was apparently also his last. What his occupation was between 1814 and 1818 remains unknown.

He did have a romance, however, during those four years. In a chatty and often inexact family memoir, "The Tabbs Family," Ellen McWilliams, a niece of Moses Tabbs, the husband of Jane Marie Carroll, says that Henry "was an early lover of the beautiful Emily Caxtan, afterwards the Marchioness of Carmarthen, but the jilt broke his heart. He was assassinated by some political enemy while traveling in the West."[13] The only Marylander to become Marchioness of Carmarthen (and later, by

the way, Duchess of Leeds) was Henry's third cousin, *Louisa Caton*, a granddaughter of Charles Carroll the Signer, and one of Richard Caton's three lovely daughters hailed by British society as "The American Graces." All three girls visited England in 1816; and all three eventually married British noblemen. Louisa was the first to wed. On April 14, 1817, she married Fenton Elwell Hervey-Bathurst, who subsequently became a baronet, but died before October 1819. Not until 1828 did the widowed Louisa marry the Marquess of Carmarthen.[14] Henry was already in Missouri by September 1818, so Louisa must have "jilted" him before she and her sisters set out for England in 1816, possibly with nobler matches already in mind.

While Henry was "acting register" at Franklin for his absent father, Major Gentry and 319 other Missourians complained about him to the federal government. They bitterly accused young Carroll of being "totally incompetent," and intimated that he had also acquired properties for himself illegally. They would have been content to have Charles in the office, and were angry with the father only because he was long absent, and they feared he was trying to ease his son into the registership.

When he died at the hands of Gentry, Henry Carroll left a small but complicated estate. Had he been the innocent victim of rivals? Or had the fond father simply overestimated the abilities of his eldest son?

Henry Carroll's grave at (Old) Franklin was perhaps obliterated by the constant flooding that prompted most of the Franklin settlers to move away for good in 1828.

2. Jane Maria Carroll (Tabbs) (1793?–1833)

Jane, Major Carroll's eldest daughter, was most likely born in 1793, since she came between Henry (1792) and Charles H. (1794). We have no information about the sort of education that her parents provided for her or for her sisters.

When Jane was of marriageable age, she was wooed by a promising lawyer, late of Hagerstown, Moses Tabbs (1780?–1836).[15] Moses' roots were in St. Mary's County. Ellen McWilliams tells us, in "The Tabbs Family," that the parents of both Moses and Jane Maria were opposed to their match on religious grounds. The Tabbses were staunch Episcopalians. Nevertheless, the wedding took place at Hagerstown on October 8, 1811. It was a Catholic rite, presided over by a French priest, Father Charles Duhamel, the missionary assigned to St. Mary's Catholic church at Hagerstown, and a good friend of Major Carroll.[16]

While practicing law in Washington County, Moses had been elected to a seat in the Maryland General Assembly in 1808 and 1809. Before his marriage, however, he had returned to St. Mary's County and run successfully in 1810 for the office of state senator of the Western Shore. Re-elected thereafter, he served in the Maryland Senate in 1811–1812, 1812–1813, 1813–1814, but resigned during the last term.[17] Along the way he became a close friend of the statesman Henry Clay.

Some time between 1816 and 1818, Moses and his family moved from the Western Shore to Vincennes, Indiana. In her Tabbs memoir, Ellen McWilliams says that during the trip, the boat in which the family was crossing the Ohio River capsized, and Moses' "wife and one son were lost, one son being the only surviving child." However, a bit later in the same account, Ellen says that three daughters were born to the Tabbses in Vincennes. Records in Vincennes prove that Jane did survive the trip; and District of Columbia records prove that she accompanied Moses back to Washington several years later. It is true, however, that when the Tabbses reached Vincennes, only one son was with them. This was Charles Tabbs, who died, aged about eight, on September 10, 1820, and was buried in the French Cemetery behind the Old Cathedral at Vincennes.[18] Charles Tabbs would have been a native of Maryland. Could a brother of Charles Tabbs have been the victim, and the sole victim, of the river accident described so graphically by Ellen McWilliams?

The Tabbses had gone to Vincennes shortly after Indiana was admitted to the Union in 1816. Moses apparently believed that he could fare better as a lawyer in that burgeoning frontier state. He and his family were well received at Vincennes as Mary-

land aristocrats. In fact, when Moses commissioned Andrew Gardner, the local cabinetmaker and undertaker, to make him a four-poster bed of the type popular in Maryland, Vincennes socialites hastened to order similar beds from the Gardner shop.[19]

Unfortunately, a serious depression struck Vincennes in 1818–1820, and many who had lately settled there decided to move elsewhere.[20] This naturally reduced the income of Moses Tabbs. Not long afterward he also became the object of a whispering campaign which alleged his dalliance with Mrs. John Cleves Symmes Harrison, whose husband's mansion then housed the Vincennes Library. His Vincennes friends, who considered Moses a "scholar, Christian and orator," vigorously rejected the rumors. Indeed, the scandalmongers seem to have been jealous rivals. However, despite the support of his loyal friends, Tabbs was so stung that he decided to move back east.[21]

In August 1828, Jane had a stillborn child in Washington. The Tabbs family must have returned to the District of Columbia in or before that year.[22] It was the beginning of a sad season for the Moses Tabbses. Jane Maria gave birth to other dead infants in 1829 and 1831.[23] Her next child was born living on May 4, 1833; but the mother herself died in childbirth.[24] Jane seems to have been the same Jane Tabbs/"Gabbs" referred to at the time of death as a communicant of Christ Episcopal Church in Washington.[25]

On January 27, 1836, a Washington newspaper recorded the death of a Mrs. Eleanor Tabbs.[26] Had Moses remarried? At all events, he survived Jane Maria a bare three years. The *National Intelligencer* of May 26, 1836, carried this obituary notice: "Moses Tabbs, member of the bar and Senate of Maryland, died in this city 21 May 1836 in the 52nd year of his age." The record of his burial in the Congressional Cemetery says he was *56*, and gives consumption as the cause of death.[27] Perhaps Jane, too, had been a victim of the "white plague."

According to the 1820 federal census taken at Vincennes, Knox County, Indiana, the Moses Tabbses then had one white male child under ten (Charles?), and four white females under ten.[28] On the other hand, a District of Columbia court case filed April 16, 1833, listed Jane's heirs as Mary Tabbs, Ann Tabbs, Alida Tabbs and Sarah Tabbs, all "infants under the age of twenty-one."[29] Sarah was most likely the child born when her mother died. Sarah herself died in September 1833, when only six months old. So Moses and Jane must have lost two other female offspring after 1820. The only Tabbs children who reached maturity were Mary, Ann and Alida.

Mary Carroll Tabbs was born in Vincennes on April 19, 1819 and baptized in the Old Cathedral there on June 30, 1819.[30] On May 29, 1845, she was joined in marriage to Thomas Tasker Gantt, at the Groveland home of her uncle, Judge Charles Holker Carroll. The officiating cleric was Rev. Henry B. Bartow, rector of St. Michael's Episcopal Church, Genesee, New York.[31] Thomas T. Gantt (1814–1889) was a native of Georgetown, D.C. He had moved to St. Louis, Mo., to practice law, and at the time of his marriage was on the threshold of a notable legal career. When Judge Gantt died on June 17, 1889, he was buried in Bellefontaine Cemetery, St. Louis.[32] Mary had predeceased him. She died of a "typho-malarial fever" on January 27, 1884, and was buried in the same cemetery.[33] The Gantts had no children.[34]

Of Elizabeth Tabbs, both Kate Rowland and Ellen McWilliams state that she never married. According to the records of the Williamsburg–Groveland cemetery, she died in Dansville, N. Y., on September 9, 1884. Dansville is in Livingston County, not far from Groveland.[35]

Her Oswego burial record tells us that Alida M. Tabbs was born on April 30, 1825. There is no record of her baptism in Vincennes. Perhaps the Tabbs family lived somewhere else in the East before they took up residence in Washington. Around 1847 she became the bride of DeWitt Clinton Littlejohn, a native of Bridgewater, New York (born February 7, 1818), but by then a prominent citizen and the future mayor of Oswego, New York. The Littlejohns had three children: Elizabeth C. ("Lizzie") (1848–1854); Lucy A. (1852?– died single

after 1892); and Hugh (1854?– died before 1892). Alida passed away on April 28, 1872; Dewitt, on October 27, 1892. An Episcopalian couple, they were buried in Riverside Cemetery, Oswego.[36]

3. Charles Holker Carroll (1794–1865)

Charles Holker Carroll was the only one of Major Carroll's sons to follow him in the career of country squire. He was also the last of the Belle Vue Carrolls to bear the family surname.

Charles Carroll, Junior, was born at Belle Vue, Hagerstown, May 4, 1794. He won his B.A. with honor from St. Mary's College, Baltimore in 1812 or 1813. In 1813–1814 he served as a volunteer in the War of 1812. Charles joined his family at Williamsburg–Groveland later in 1815.[37] When the father migrated to Missouri in 1819, he designated Charles, Jr., as his attorney and the administrator of his eastern properties. The junior Charles, just twenty-one, was at first almost overwhelmed by the task imposed on him. But he grew gracefully into the new career.

One of Holker's early decisions was to study law. He was admitted to the bar in 1819. This must have been the New York Bar, for in early 1820 he ran a notice in several issues of the *Ontario Repository* (Canandaigua, N. Y.): "Charles H. Carroll, Attorney-at-law, has opened an office at his residence in Williamsburg on the Genesee River, January 27th, 1820."[38]

In May, 1820, the new attorney took a wife, Alida Van Rensselaer (1801–1832). She was the daughter of Jeremiah Van Rensselaer, a Utica merchant of the Greenbush Rensselaers, and great-grandson of the fourth patroon, Gen. Robert Van Rensselaer. Jeremiah was associated with the Presbyterian church in Utica, but the wedding of Charles and Alida took place in Utica at a Catholic ceremony. Presiding was the "Rev. Mr. [John] Farnan, Catholic pastor." Father Farnan's parish was St. John's, of which Charles of Belle Vue had been a founding trustee.[39] In 1825, Jeremiah was to move to Canandaigua, New York. His daughter Cornelia Rutson Van Rensselaer was living there, the wife of Francis Granger, the future U. S. postmaster general under William Henry Harrison, and himself a son of Gideon Granger, postmaster general from 1801 to 1814.

In 1826, Holker left the house where his father had settled and moved into a large new mansion, "The Hermitage," which he had just built a mile or so to the south. Here he engaged in general farming, raised livestock, and was active in the Livingston County Agricultural Society. He was also a leader in many civic projects. Although he practiced little or no law, he was almost inevitably drawn into politics. He served several terms as supervisor of the town of Groveland (1822, 1829, 1840, and 1848, it seems). From 1823 to 1829 he was county judge. In 1826 he ran for state senator on the "Bucktail Whig" ticket, and sat in the New York Senate 1827–1828. In 1836 he was elected to the State Assembly; and from 1845 to 1847 he represented Livingston and Ontario counties in the 28th and 29th U. S. Congresses as the candidate of the Henry Clay Whig ticket. After this one Congressional term, Charles did not seek re-election. By 1856, when the Whigs had become badly splintered, he spurned the new Republican Party, joined the American (Know-Nothing) Party, and was chosen an elector for its presidential slate candidates, Millard Fillmore and Andrew Jackson Donelson.

From 1827 on, Charles Holker Carroll was also active in the affairs of the Episcopal Church. He and his wife and children were first mentioned as parishioners on the 1827 parish list of St. Michael's Episcopal Church, Geneseo, New York (organized 1819). When the Episcopalians of Mount Morris incorporated St. John's Church, Judge Carroll transferred his affiliation to that parish, no doubt because it was closer to "The Hermitage." He became a vestryman and warden, and was a delegate to the 1852 national convention of the Episcopal Church.[40]

Charles Holker Carroll died on July 20, 1865 and was buried in the Carroll plot in Williamsburg Cemetery. "Immense throngs" from the area attended his funeral. The deceased had evidently merited the high esteem of his fellow citizens. He was praised for the "simplicity, earnestness, and steadfastness of his Christian charac-

ter, his integrity, uprightness and benevolence. . . ."[41]

Alida Marie had pre-deceased Charles Holker by many years. She died in 1832 at the age of only 31, and was buried in the Williamsburg family plot.[42]

Charles and Alida had three daughters who grew to maturity. The eldest, Cornelia Granger Carroll (1826–1909), married Edward P. Fuller (1820–1886). The Fullers moved to Michigan.[43] The middle daughter, Ann Elizabeth (1828–1905) also married a local man, William Dana Fitzhugh (1824?–1889), a son of Dr. Daniel H. Fitzhugh (1784–1881) and Ann Dana (1803–1850), and therefore a grandson of Col. William Fitzhugh, Jr., Major Charles's Maryland and Groveland business partner. Ann Elizabeth had eight children, raised six, and was buried in the Fitzhugh plot of the Williamsburg Cemetery. Charles Holker's youngest daughter was Adeline Van Rensselaer Carroll, who died single in 1860, aged thirty. She, too, is interred in the Williamsburg burial ground, but in the Carroll plot.[44]

4. Hannah Lee Carroll (1797?–1836)

According to the Williamsburg grave list, Hannah Lee Carroll died at the age of thirty-nine on May 31, 1836. This would place her birth date around 1797. Her parents named her after her grandmother Sprigg.

Hannah spent her teens and early twenties traveling with her family from Hagerstown to Georgetown, to Williamsburg, to Missouri, and back to the Genesee country. After her return in 1822 she resided with her brother Holker, first in the original Carroll home at Williamsburg, and, after 1826, at "The Hermitage," where she died.

As we have noted, after his father's death, Holker and his own family enrolled as communicants of St. Michael's Episcopal Church in Geneseo. Hannah Lee, following the lead of her brother, was confirmed at St. Michael's on February 2, 1827, according to the records of that parish.

Charles of Belle Vue's second daughter never married.

5. Daniel Joseph Carroll, M.D. (1801?–1860)

Although he was a resident of New York City in the later years of his life, Daniel Joseph Carroll chose to be buried in the family plot at Williamsburg. The cemetery record says that this third son of Charles and Ann Carroll died on May 10, 1860, aged 59. He was therefore born around 1801.

The archives of Mount St. Mary's College, Emmitsburg, Md., record a Daniel Carroll of Washington as a student in the preparatory school department from September 6, 1811 through June 30, 1814. His father's name is given as Charles Carroll; his brother's as William. The residence and relationships fit in with our Daniel. However, the age assigned, fourteen, does not.

The next document definitely refers to Daniel. It is his will, written on January 25, 1830, in which he bequeaths his portion of his father's estate (one-seventh) to his "beloved brother" Charles Holker Carroll. The will speaks of Daniel as "of Rochester Munro [*sic*] County in the State of New York."[45] At that time, therefore, he was apparently a resident of the city his father had co-founded. But his next ascertainable address is in New York City. New York directories of the 1850s mention him as a medical doctor residing at 97 Chambers Street, Manhattan. He may well have "read" medicine with a licensed physician, as his brother Charles "read" law with a licensed attorney. Oddly enough, Dr. Carroll's name does not appear in the several biographical dictionaries of early American physicians.[46]

In 1848, Daniel became involved in an interesting but eventually embarrassing newspaper correspondence. The subject was a Carroll family matter—the part that Charles of Belle Vue had played in assisting Dolley Madison in 1814 to save the White House portrait of George Washington from the vandalism of the British invaders. One of the best-known incidents in Dolley's flight was her refusal to leave until the painting, then thought to be the work of Gilbert Stuart, had been taken away to a safe hiding place.

Thirty-three years later, in the spring of 1847, the *New York Herald* published accounts by Jacob Barker and Robert G. L. DePeyster, former New Yorkers who were at the White House on August 24, 1814, recounting how Mrs. Madison had asked

them to carry the picture off to a place of concealment.

Dr. Daniel retorted to this scenario in a letter to the editor of the *Herald*, published on January 31, 1848. He angrily denied the narrative of Barker and DePeyster. Then he told the "'true' story" as he had "often heard it related by my father." Charles of Belle Vue, he said, had been dining that day with the First Lady when the President's message arrived to flee the presidential mansion. Charles straightway ordered a carriage for her. Then, "with his penknife, [he] cut out or detached (in some way separating) from the frame in which it hung, the original portrait of Washington, and himself saved that portrait."[47]

Barker and DePeyster hastened to defend their version, calling on Dolley Madison herself as witness. On February 11, 1848, she replied to DePeyster, quoting from a letter she had written to her sister on that fateful August 24, 1814, just before leaving the White House: "the precious portrait [has been] placed in the hands of two gentlemen from New York for safe keeping." To this quotation she added the comment: "The impression that Mr. Carroll saved Stuart's portrait of Washington is erroneous. The paper which was to accompany your letter has not reached me, but I have heard that his family believed he rescued it. On the contrary, Mr. Carroll had left me to join Mr. Madison, when I directed my servants in what manner to remove it from the wall, remaining with them until it was done. I saw Mr. Barker and yourself (the two gentlemen alluded to) passing, and accepted your offer to . . . preserve this portrait, which you kindly carried, between you, to the humble but safe roof which sheltered it awhile."[48]

Despite Dolley's statement, Dr. Carroll sought to justify his version and cried out upon Barker in further newspaper correspondence. The whole interchange proved that the Major's sons and daughters had grown up in the belief that he had been the hero in this minor episode. Had the Carroll children built up a myth out of inexact recollections of their deceased father's reminiscences? Or had Charles himself, recounting to his family what was probably the most thrilling experience of his career, simply embroidered the narrative a little to his own advantage? He surely could not have imagined that a quarter-century after his death, Dolley would still be around and gently but firmly correct the version attributed to her friend "Mr. Carroll."

Dr. Carroll, according to Kate Mason Rowland, never married.

6. William Thomas Carroll (1802–1863)

The documentation on Charles' fourth son, William, is a little more ample, because he held an important office in the federal government, and because his children achieved some note. The inscription on his tomb in Oak Hill Cemetery, Washington, says he was born on May 2, 1802, and died on July 13, 1863.

There is a William Carroll from Washington listed as a preparatory school student at Mount St. Mary's, Emmitsburg from September 8, 1811 to June 14, 1814; and again from March 23, 1816 and January 24, 1817. His father's name is given as Charles, and his brother's name as Daniel. All this fits in very well with the known career of young William. He did not move north with his family in 1815, at least permanently, and he spent the rest of his life in the Maryland–Washington area. Unfortunately, in this case, as in Daniel's, the age of sixteen assigned to the Mount St. Mary's William does not fit in with *our* William's known date of birth. So the Belle Vue William's attendance at the Emmitsburg preparatory school remains dubious.

It has been conjectured that after Major Carroll moved to New York State he left William Thomas in the care of his half-uncle Samuel Sprigg, the future governor. Perhaps William even "read" his law with Judge Sprigg. At all events, he was already a member of the bar by 1826, for in that year he became a co-professor with Judge William Cranch of the District of Columbia Circuit Court in a new law school affiliated with Columbian College (the future George Washington University). This law school functioned only one year; but in the very year of its demise, Attorney William Carroll received an appointment to the prestigious post of clerk of the United States Supreme Court.[49]

Ellen McWilliams tells us how William obtained this assignment. "My uncle [Moses] Tabbs was a personal friend of Henry Clay and by his personal influence obtained from him, while Secretary of State, the position of clerk of the Supreme Court for his wife's brother, Mr. William Carroll."[50] Ellen's further remark that this "very lucrative office . . . gave him an opportunity of amassing the large fortune he so long enjoyed" savors of folklore. William Thomas Carroll, was, it seems, a man of means in his own right. However, the identification of Henry Clay as the agent of his appointment rings true. Clay was secretary of state from March 7, 1825 to March 4, 1829. Although Ellen McWilliams says nothing about the background of Henry Carroll's appointment as Clay's personal secretary, we have guessed above that Moses Tabbs may also have suggested Henry for that post. The Carrolls of Belle Vue seem to have identified closely with Clay. Even Holker won election to Congress in 1845 on the Clay Whig ticket.

Around 1830, William married Sarah ("Sally") Sprigg, the daughter of his half-uncle, Judge Samuel. (Maryland gentry often sought spouses among fairly close kin.) According to the records of Oak Hill Cemetery, Sally was born on March 27, 1812 and died February 11, 1893.[51] Mathilde Williams says that the W. T. Carrolls lived with Sally's father, Governor Sprigg, at 1801 "F" Street, N.W., Washington. Sprigg had bought the home on May 15, 1835. It still stands, owned by the National Trust.

The William Carrolls lost three boys but raised five other children. Kate Rowland lists the five in what is probably the order of birth, but gives incomplete data about them: 1. Major Gen. Samuel Sprigg Carroll (1831–1893). 2. Violetta Lansdale Carroll (Mrs. Dr. Thomas Swann Mercer). 3. Sarah Carroll (m. [1] Maj. Gen. Charles Griffin (1826–1867); [2] "Count Esterhazy of Austria.") 4. Caroline Carroll (m. "Lieut. Boles, U.S.N."). 5. Alida Carroll (m. Gen. John M. Brown). William's children, therefore, made rather distinguished matches.[52]

When his young son William Thomas, Jr., died on January 19, 1857, William, Sr. purchased Lot 292 in the Oak Hill Cemetery, Georgetown, where he had the lad interred. The clerk himself was burried there in 1863, one year after his retirement from the Supreme Court office. Among the others laid to rest in the Carroll vault were General Samuel Sprigg Carroll, Sally Sprigg Carroll, and Sally's parents, Governor Samuel Sprigg, and Violetta Lansdale Sprigg. Temporarily interred in the same vault was William Wallace Lincoln ("Willie"), the eleven-year-old son of President Abraham Lincoln, who died in Washington on February 20, 1862. Three years after Willie's death, when the body of the assassinated president was transported by train to Springfield, Illinois, for burial, the coffin of Willie was carried thither on the same funeral train. Willie Lincoln's temporary interment in the Carroll vault suggests, though it does not prove, a close friendship between the families of the president and the clerk of the Supreme Court.

From the time of his marriage, it seems, William Thomas Carroll was a member of the Episcopal Church.[53]

7. Ann Rebecca Carroll Lane (1803?–1846)

When Ann Carroll Lane died in St. Louis, Mo., on August 17, 1846, she was in her forty-third year.[54] She was therefore born around 1803. As an unmarried minor, she went with her family from Hagerstown to Georgetown, from Georgetown to Groveland, N. Y., and from Groveland to (Old) Franklin, Missouri. However, she did not return to the East in 1822, for she had married a Franklin physician. The nuptials were recorded in the Franklin newspaper: "MARRIED.—On Wednesday evening last [November 7, 1821], by the Rev. Mr. Williams, Doctor HARDAGE LANE, to Miss ANN REBECCA CARROLL, daughter of Charles Carroll, Esq., all of this place."[55]

After the departure from Franklin of Charles of Belle Vue, Dr. Lane continued for a while as administrator of the estate of Henry Carroll. Then in June, 1826, the Lanes moved to St. Louis, where they spent all (or practically all) the rest of their lives. Hardage Lane had come to Missouri after 1810 from some other state (most likely Indiana). The place and date of his birth are unknown, but his background seems to

have been impressive. In 1815 and 1816 he represented Washington County, Missouri, in the Missouri Territorial Legislature. He was also a leader in Freemasonry. While in Franklin he helped establish its pioneer unit, "Franklin Union Lodge," in 1821, and served as the first master. In St. Louis, he continued his Masonic activities, holding for some years the office of Grand Master of Missouri Lodge No. 1. However, on September 16, 1837, he asked the lodge for a "dimit" or release. There are no further records of his Masonic affiliation.

Hardage Lane was a man of prestige in St. Louis. His kinsman Dr. William Carr Lane was mayor of the city. Hardage himself, according to his biographer, "was very hospitable and entertained a great deal of company; his wife was an accomplished woman and a leader in society, and elegant dinners and fashionable parties given at the Lane home were the talk of the city."

Dr. Lane was not only noted as a host but as a physician who kept abreast of medical developments. He was patronized in particular by leading St. Louis citizens. When he died on July 11, 1849, three years after his wife, it was in the line of duty. Working tirelessly to take care of the victims of the cholera epidemic that had stricken his city, he himself was carried off by the disease, "a sacrifice to his convictions of professional honor and duty." Ray V. Denslow states that Dr. Lane was buried (with his wife?) in Calvary, a Catholic cemetery in St. Louis; and he shows a picture of the Lane "family vault," calling it Lot #40, Section 3. This cannot be correct, for Calvary Cemetery opened only in 1854; and the vault pictured is that of a Julie Harty. There is, however, a Lot #30, Section 3, which was purchased on October 11, 1855 by one Hardage Lane. This was most likely Hardage Lane, Jr., one of Dr. Lane's three children (Elizabeth, Hardage, and Harvey). Rowland says that Hardage, Jr. and Harvey did not marry. There were two burials in the plot of Hardage Lane, Jr.: Leoni Isabella Peake (buried August 13, 1863) and an Ida De Campi (buried June 7, 1876).[56] Leoni Peake is quite likely the daughter of Elizabeth Lane, for on February 2, 1843, "Elizabeth Carroll Lane of the Catholic church" was joined in marriage to Samuel S. Peake "of the Protestant Episcopal church" at the chapel of the University of St. Louis, St. Francis Xavier Church.[57]

8. Elizabeth Barbara Carroll Fitzhugh (1806–1866)

Elizabeth B. Carroll, according to the Williamsburg–Groveland cemetery records, was born at Belle Vue, Hagerstown, in 1806. As the baby of Major Charles' family, she migrated with them to Georgetown, Groveland, Missouri and back, and was still only sixteen when they re-settled in the Genesee Country.

On December 11, 1827, at Groveland, Elizabeth became the bride of Henry Fitzhugh of Oswego, New York (b. 1801). It was an Episcopal wedding, presided over by the Reverend [L. P.] Bayard, rector of St. Michael's Episcopal Church in Geneseo, N. Y.[58] Although Henry was then living at Oswego, he was a Marylander by birth, and the son of Charles of Belle Vue's old friend and business partner, Col. William Fitzhugh of Groveland.[59]

As in the case of the other Carroll daughters, more is known about the man Elizabeth married than about herself. For years thereafter, Henry Fitzhugh was a leading commercial and political figure in Oswego. He was a director of the Northwest Transportation Company and an incorporator of an Oswego cotton factory. He was mayor in 1859, 1860 and 1861; State assemblyman in 1849 and 1855; and postmaster of Oswego. A school and a park in the city were names after him. In 1865, the Mount Carbon Railway Company of Centralia, Illinois, invited him to become its president. Henry accepted, but died in Centralia very suddenly on August 11, 1866. His body was brought back for burial in the Fitzhugh plot at Williamsburg. (The cemetery record erroneously gives his year of death as *1855*.) Elizabeth Barbara, if her graveyard record can be trusted, died the same year. Because nothing is known about her death other than it occurred in 1866, it is impossible to say at this point whether she died before or after her husband.

The Henry Fitzhughs raised five children: Henry (1832–1889); Gerrit Smith (1834–1883); Anna (1836–1867); Major

General Charles Lane (1838–1923); Lieutenant Colonel Robert Hughes (1840–1920). At least Henry and Anna died single.[60]

Elizabeth Barbara Carroll Fitzhugh was the fourth and last of the Belle Vue children to be interred in the Williamsburg cemetery at Groveland. She was also the last survivor of Charles of Belle Vue's eight sons and daughters, dying a year before the centenary of their father's birth. Like her brothers and sisters, Elizabeth seems to have upheld the social honor of her branch of this distinguished family of the Maryland colonial gentry.

References

1. See Kate Mason Rowland, *The Life of Charles Carroll of Carrollton, 1733–1832* (New York, 1898), Appendix D, II, 441–43; Ann C. Van Devanter, *"Anywhere So Long As There Is Freedom": Charles Carroll of Carrollton, His Family and His Maryland* (Baltimore, 1975), genealogical chart I, p. xvii.
2. Most of the documentation for this essay will be found in this writer's "Charles Carroll of Belle Vue, Co-founder of Rochester" in *Rochester History* (Rochester, N. Y. Public Library) XLII, No. 4, Oct. 1980. References presented herewith usually relate to broader or more recently discovered data. Thus Major Carroll's financial problems in 1818 are pointed out by Neil Adams McNall, "The Landed Gentry of the Genesee," *New York History*, 26 (1945), 162–76.
3. "Field Officers of Regts, Military Appointments," date of record, 1799. Vol. 2, p. 92A, Microfilm no. SR 2332. Job 821086. Also "Militia Appointments," date of record 1794, Vol. 1, p. 6 ("Resigned" is written after Carroll's name in the latter document.) Both transcripts were kindly furnished by the Hall of Records Commission, Dept. of General Services, State of Maryland (Annapolis, Md.).
4. I am indebted to the Livingston County Historian, M. Patricia Schaap, for this and other references to burials in the Williamsburg-Groveland cemetery. *Ann* Carroll spelled her name thus, as witness her signature on the last will of Daniel J. Carroll (see below).
5. J. Chris Ramsey to the present writer, Hagerstown, Md., March 27, 1982.
6. Christopher Johnston, "The Sprigg Family," *Maryland Historical Magazine*, VIII (1913), 74–84.
7. For Gov. Samuel Sprigg, see White's *National Cyclopedia of American Biography*, IX (1899), 300 (with portrait); Robert Sobel and John Raimo, *Biographical Directory of the Governors of the United States, 1789–1978* (Westport, Conn., 1978), II, 655–56. Sobel and Raimo say he was born in 1783 at Largo, Prince George's Co., Md., and died April 21, 1855. His wife was Violetta Lansdale, and his religious affiliation was Methodist.
8. Nathaniel Rochester Papers (Rochester Public Library), Major Carroll to Nathaniel Rochester, Washington, D.C., February 16, 1812.
9. Nathaniel Rochester to John G. Critcher, Rochester, August 15, 1825, quoted in Howard L. Osgood, "Rochester, Its Founders and Its Founding," an 1894 lecture reprinted in *Rochester Historical Society Publication Fund Series*, I (1922), 90.
10. For Henry's birth date, see Archives of the Archdiocese of Baltimore, 11T10, Charles Carroll of Belle Vue to Archbishop John Carroll, Belle Vue [Hagerstown], May 5, 1810.
11. "Students at St. Mary's College," appendix in *Memorial Volume of the Centenary of St. Mary's* (Baltimore, 1891), pp. 86, 91. The listing is confused. It gives Henry's date of entry as both 1809 and 1813, and his departure (and B.A.) as both 1812 and 1813. There is no doubt, however, that Henry was a boarder at Mount St. Mary's, Emmitsburg from December 10, 1809 to May 1, 1810 (Records of Mt. St. Mary's college and seminary).
12. John Carroll ot Thaddeus Brzozowski, S.J., [Baltimore], January 28, 1814, in Thomas O'Brien Hanley, S.J., *The John Carroll Papers* (Notre Dame, 1976), III, 252–53. In this letter of introduction, Archbishop Carroll speaks highly of Henry's traits.
13. Ellen McWilliams, "The Tabbs Family," presented by Mrs. Philip Ford Combs, *Chronicles of St. Mary's*, St. Mary's County Historical Society, Vol. 13, No. 6, June 1965. Ellen was the daughter of Moses' sister Ann, who married Dr. Alexander McWilliams.
14. For Louisa Caton, see Van Devanter, "*Anywhere . . .*," pp. 244–49.
15. Thomas J. C. Williams, *History of Washington County, Maryland* (Baltimore, 1906; reprinted 1968), p. 135.
16. *Maryland Herald and Hagerstown Weekly Advertiser*, XV, No. 765, October 9, 1811. On Charles Carroll and Fr. Duhamel, see Charles to Abp. John Carroll, Belle Vue [Hagerstown], May 5, 1810, Note 10, above.
17. Notes of the "Legislative History Project," Annapolis Hall of Records, kindness of Cynthia Z. Stiverson, Legislature Library.
18. Burial Records, Vol. 5 (1704–1838), p. 554, the Old Cathedral (Basilica of St. Francis Xavier), Vincennes, Ind., kindness of Rev. Msgr. Linus J. Hopf and Miss Esther Cunningham.
19. Rev. Henry VanderBurgh Somes, *Old Vincennes* (Vincennes, Ind., published by the Old Cathedral, 1962, 1970), p. 158, 163–64.
20. Somes, *Old Vincennes*, pp. 161, 168–69.
21. Henry S. Cauthorn, *A Brief Sketch of the Past, Present and Prospects of Vincennes* (Vincennes, Ind., 1884), p. 34. In a later book on the same subject, he repeated the story of the "scandal," but with more temperate conclusions: *A History of the City of Vincennes, Indiana, from 1702 to 1901*, p. 189 (published by Margaret C. Cauthorn, Vincennes, October 15, 1901). Mr. Harrison was

the popular son of President William Henry Harrison.

22. Congressional Cemetery, District of Columbia, Interments and Removals, Book No. 1, p. 39, records the burial of a Tabbs child on August 6, 1828. The Tabbs children and some others of the Barton Tabbses were buried in the cemetery "ground" of Dr. Alexander McWilliams, presumably the father of Ellen McWilliams. For most of the references to the Moses Tabbs family after their return to Washington, I am indebted to the late Francis A. Raven of Arlington, Va.
23. Congressional Cemetery, Interments and Removals, Book No. 1, pp. 36, 43.
24. *National Intelligencer*, March 5, 1833. Congressional Cemetery, Interments and Removals, Book No. 1, p. 56.
25. "Christ Episcopal Church, District of Columbia, Records Copy, 1793–1921." Compiled by Livingston Manor Chapter, District of Columbia D.A.R., Vol. 69, pp. 97 (?), 136. Christ Church is on Capitol Hill. The Washington city directory for 1834 lists Moses' address as on the north side of Pennsylvania Ave., between 2nd and 3rd Sts., S.E., on land now occupied by the Library of Congress.
26. *National Intelligencer*, February 7, 1837.
27. Congressional Cemetery, Interments and Removals, Book No. 1, p. 81.
28. *1820 Federal Census for Indiana*, Willard Heiss, compiler, 1966.
29. Case file 235, Rules 3, D.C. Chancery. Complainants were the President and Directors of the Union Bank of Georgetown; defendants were Ann Carroll and family and the Chesapeake and Ohio Canal Co. Filed April 16, 1833. (National Archives Trust Fund Board, Prot. NNGR BL82).
30. Original French records, Vol. B (1814–1837), p. 32. The baptizing priest was Rev. Anthony Blanc, and the sponsors were "Charles Carrollia" [*sic*] and Ann Rebecca Carroll. As godfather, the Major signed the record as "Charles Carroll of Belle Vue." Moses Tabbs signed as proxy for Ann Rebecca Carroll [Lane], Jane Tabbs's younger sister.
31. *Rochester Democrat*, June 5, 1845; records of St. Michael's Church.
32. J. Thomas Scharf, *History of St. Louis City and County* (Philadelphia, Pa., 1883), II, 1486–87. Obituary, *St. Louis Daily Globe–Democrat*, June 18, 1889, p. 5, col. 5. Burial certificate, St. Louis Health Commissioner. Bellefontaine plot record, 1920–3175, Block 26.
33. Burial certificate of "Mrs. Mary C. Gantt," St. Louis Health Commissioner.
34. T. T. Gantt obituary, *Globe–Democrat* (see above).
35. The original French records of the Old Cathedral, Vincennes, Vol. B (1814–1837), p. 50, record the birth of "Anna Elizabeth Tabbs" in Vincennes on February 6, 1820, and her baptism there by Rev. Andrew Ferrari, on April 30, 1820. The sponsors were Daniel Carroll and Elizabeth Carroll. The Livingston County burial records for the Williamsburg–Groveland cemetery say that Ann Elizabeth Tabbs was a native of Washington, and was sixty when she died on September 9, 1884. Is the Williamsburg cemetery record inexact, or were two Tabbs daughters successively named "Ann Elizabeth"?
36. See obit of Alida, *Oswego Daily Palladium*, Oswego, N.Y., April 30, 1872; of DeWitt (1818–1892), ibid., October 27, 1892. For Oswego data on the Littlejohns I am indebted to Mrs. Beulah S. Schroeder, Oswego genealogist.
37. For Holker's late arrival, see Nathaniel Rochester Papers, William Fitzhugh to Col. Rochester [Maryland, October 9, 1815]. For his later career, see obituaries in the *Livingston Republican* (Geneseo, N. Y.), July 27, 1875, and the *Union and Advertiser* (Rochester, N. Y.), July 24, 1865. He is also referred to on pp. 569–571, and *passim*, in Lockwood *L.* Doty, *A History of Livingston County, New York* (Geneseo, N. Y., 1876; reprint with index, Geneseo, 1979); and in Lockwood *R.* Doty, *History of Livingston County* (Jackson, Michigan), 1905, p. 940. Both have the same portrait of Charles Holker Carroll. There is likewise a biographical sketch of him in the *Biographical Directory of the American Congress, 1775–1971* (Washington, D. C., 1971), and in the Historical Volume (1607–1891) of *Who Was Who?* All these accounts, apart from the obituaries, have faults. L. L. Doty, the *Directory*, and *Who Was Who?* call him Charles *Hobart* Carroll; and L. R. Doty confuses him with Maj. Charles Carroll, his father. The *Directory* also gives his birthplace as Belle Vue, Georgetown, rather than Belle Vue, Hagerstown. (The family surname "Holker" was familiar in Washington Co., Md.)
38. Notice of his new law practice is given in the *Ontario Repository*, Canandaigua, N. Y., February 2, 1820 and subsequent issues. The Dotys say he was admitted to the bar (New York?) in 1819, after reading law at Litchfield, Conn. This is the only reference to Connecticut in Holker's whole life. His obituary says he read law with John C. Spencer of Canandaigua, New York—a more plausible statement.
39. *Ontario Repository*, May 23, 1820. Rev. John Farnan was born in Ireland in 1780 and died in Detroit 1849. For Jeremiah Van Rensselaer's Presbyterian connections, see M. M. Bragg, *The Pioneers of Utica* (Utica, N. Y., 1877), pp. 111–16.
40. Records of St. Michael's Church, Geneseo, N. Y., kindness of Rev. Charles C. Greene, III; sketch of St. John's Episcopal Church, Mt. Morris, in Rev. Levi Parsons and Samuel L. Rockefellow, *Centennial Celebration, Mount Morris, N. Y.* (Mt. Morris, 1894), p. 138. For Carroll and the Episcopal convention, see Rochester *Daily Union*, August 23, 1852.
41. Parsons and Rockefellow, *Centennial Celebration*. The cemetery records date the death on July 22, but the Rochester *Union and Advertiser* of July 24, 1865, says he died July 20.
42. Williamsburg Cemetery burial list.
43. Cornelia wed Edward P. Fuller in Livingston County, N.Y., on May 15, 1850. In 1868 the couple moved permanently to Grand Rapids, Mich., to manage the local properties of the late Judge Charles H. Carroll. The Fuller children were: Sophia ("Sophie") (Mrs. Edwin F. Sweet, 1854–

1923); Philo C. later mayor of Grand Rapids (1857–1931); and Charles Carroll (1859–1872). See A. W. Bowen and Co., *History of Grand Rapids and Kent County up to Date* (Logansport, Ind., 1900), pp. 177–79; D.A.R. "Kent County Cemetery Records," typescript 1925–1932, Lora Seaman, Ed., Grand Rapids Public Library; *Grand Rapids Herald,* May 24, 1931.

44. Williamsburg Cemetery burial list. Ann Elizabeth Fitzhugh's/ obituary is in the Rochester *Democrat and Chronicle,* April 10, 1905.
45. Will of Daniel J. Carroll, probate records, Surrogate Court, County of New York, October 21, 1865, Liber 154, p. 284.
46. "T. B." to the present writer, General Research and Humanity Division, New York Public Library, June 27, 1977.
47. *New York Herald,* January 31, 1848, p. 1. (This correspondence was carried in other papers, too.)
48. Barker's account, reproducing much of the newspaper exchange, is given in his memoirs, *Incidents in the Life of Jacob Barker* (Washington, D.C., 1855), pp. 109–18.
49. Mathilde Williams, "Willie Lincoln," unpublished MS., Peabody Collections, Georgetown Branch, District of Columbia Public Library.
50. Ellen McWilliams, "The Tabbs Family."
51. I owe the information on the W. T. Carroll vault burials to Mr. George L. Kackley, former director of Oak Hill Cemetery.
52. The *Dictionary of American Biography* contains the biography of Samuel Sprigg Carroll. So does Appleton's *Cyclopedia of American Biography* (New York, 1888), with a portrait. The combination of the names "Swann" and "Mercer" suggests that Dr. Mercer may have been a descendant of John Francis Mercer (1759–1821), eleventh governor of Maryland, of whom sketches are given in White's *National Cyclopedia of American Biography,* IX (1899), 295–96; and in Sobel and Raimo, *Biographical Directory of the Governors of the United States,* II, 650. There is a biography of Gen. Charles Griffin, with portrait, in White's *National Cyclopedia,* IV (1893), 337–38. Neither Gen. John M. Brown nor Lieut. Boles is listed in the major directories of biographical reference.
53. Mathilde Williams, "Willie Lincoln," and Oak Hill Cemetery records. W.T. Carroll was an active parishioner of St. John's Episcopal Church, Washington, in the 1840's. See Alexander P. Hagner, "History and Reminiscences of St. Johyn's Church, Washington, D.C.," *Records of the Columbia Historical Society,* 12(1909), 96.
54. Ray V. Denslow, *A Missouri Frontier Lodge: The Story of Franklin Union Lodge No. 7 at Old Franklin, Missouri, 1822–1832* (Masonic Services Association of Missouri, [St. Louis?], 1929), p. 65. Part of Chapter VIII is devoted to "Hardage Lane, Pioneer Physician," (pp. 65–70). It quotes a brief sketch of Lane from Scharf's *History of St. Louis City and County,* II, 1522.
55. *Missouri Intelligencer,* November 3, 1821, p. 5, col. 1. During the Carroll sojourn there was not yet a church of any denomination in Franklin. Mrs. Alma Vaughan, former reference specialist, State Historical Society of Missouri, Columbia, Mo., suggests that the Rev. Mr. Williams may have been Justinian Williams, a contemporary Methodist minister often mentioned in the *Intelligencer.*
56. Ann Goessling, Calvary Cemetery, St. Louis, to the present writer, October 27, 1981.
57. Wedding record, kindness of Rev. Robert F. Houlihan, S.J., pastor. The presiding clergyman was Rev. George A. Carrell, S.J.
58. *Ontario Repository,* Canandaigua, N.Y., December 19, 1827. The Rev. L. P. Bayard was rector of St. Michael's, Geneseo, and entered the wedding in its books, though without date.
59. According to his record in the Williamsburg–Groveland cemetery, Henry Fitzhugh was born in 1801 at "The Hive," Washington Co., Maryland, the then residence of Col. William Fitzhugh, Jr., and Ann Hughes Fitzhugh. He was one of the colonel's seven sons and five daughters (Lockwood R. Doty, *History of Livingston County,* 1905, pp. 944–48). For Henry's life in Oswego and Illinois, see John C. Churchill, *Landmarks of Oswego County, New York,* p. 367; obituary, *Albany Evening Journal,* in Oswego County Historical Society, "Obituaries: 1866–1895, Bradley B. Burt Collections, Vol. II." Further information kindly furnished by Mrs. Beulah S. Schroeder, genealogist, of Oswego.
60. I am indebted to Mr. Robert Mikel of Cobourg, Ontario, Canada, for the data on the children of Henry and Elizabeth Barbara Fitzhugh.

BOOK NOTES

The Bean Family of Maryland. By Margaret Bean Langley. ([Bryantown, Md.]: By the author, 1984. 179 pp. Indexed, illustrated. No price given. Order from P. O. Box 97, Bryantown, MD 20617.)

The author has used family Bibles, wills, accounts and other records to put together a helpful little book on the Beans and their relatives in Southern Maryland. The author has included information on variant spellings such as Beans, Beanes, Bayne, Bain, and Baynes. Some of the related families include the Dents, Chases, Brookes, and Hawkinses. There is also information on the Hanson, Harrison, and Fendall families. Although the book does not contain a standard form for documentation, many of the sources are cited in the text. The author has included a coat of arms but no explanation of the family's right to it. The most serious flaw in the book is the lack of any kind of numbering system, making it difficult to move back from a given ancestor to the earlier generations. The index will help to overcome this defect, and the book is recommended for genealogical libraries, and for persons interested in the families discussed.

ROBERT BARNES
Perry Hall, Maryland

NEWS AND NOTES

Learning Vacation at St. Mary's College

A one-week adult Learning Vacation, covering four centuries of Southern Maryland history, will be offered by St. Mary's College of Maryland from June 16 to 23 at St. Mary's City. The theme: "Colonial Barony to Free State; the Southern Maryland Legacy." The program is open to all, and there are no prerequisites.

The faculty includes Dr. J. Frederick Fausz, associate professor of history at St. Mary's and an NEH research fellow; Dr. L. Tomlin Stevens, also an associate professor whose interests are in the Revolutionary period and the early 19th century; and Garry W. Stone, archaeologist for Historic St. Mary's City.

Mornings will be devoted to lectures and the afternoons to field trips to historic homes and museums in St. Mary's and Calvert Counties. Evening activities include a dinner cruise on the St. Mary's River, a concert, and a Shakespearean performance in a riverside amphitheater. St. Mary's College facilities—sailboats and canoes, tennis courts, gym and pool—also are open to Learning Vacation registrants.

For information, write or call Summer Programs Office, St. Mary's College of Maryland, St. Mary's City, MD 20686, phone (301) 863-7100, ext. 330.

Union Soldiers' Unclaimed Medals

In 1866, the West Virginia Legislature struck 26,099 medals for distribution to Union soldiers who fought in West Virginia regiments. Today, approximately 5,200 medals remain in filing cabinets in the Cultural Center under the jurisdiction of the West Virginia Department of Culture and History waiting to be claimed by the heirs of the soldiers, many of whom came from neighboring states to be mustered into West Virginia regiments. Lists of soldiers from states adjacent to West Virginia's borders have been arranged according to the hometown given by the soldier at the time of his muster. Heirs who can document their descent from the Civil War solider may make a claim for the medal through the Department's Archives and History Division.

"In many cases soldiers came to West Virginia regiments to enlist because the local regiments in their own states had reached their quotas," said Fredrick Armstrong, Associate Director, Archives and History Divison. "Of course, the proximity of the West Virginia regiment just across the state line from their home was conducive to this type of enlistment."

Armstrong explains that the unclaimed medals are still stored in the small cardboard boxes in which they arrived from A. Demarest of New York in 1866–67. Written in longhand on the outside of each box is the soldier's name and his unit. The medals were struck in three separate classes: Class I medals for officers and soldiers in the volunteer army who were honorably discharged from the service; Class II medals for officers and soldiers who were killed in battle; and Class III medals for officers and soldiers who died of wounds or diseases contracted in the service. Early records show that the largest portion of medals ordered were Class I.

The Department of Culture and History will award the medals to heirs who can provide documentation establishing a line of descent from the Union army veteran. Armstrong specified that such documentation might be drawn from military, census, birth, death, marriage records, and other generally accepted genealogical research records. The applicant for the Civil War medal must present copies of the necessary records, many of which are available in the Cultural Center's Archives and History Library. Personal family documents—letters, diaries, Bible records—may also prove useful in establishing sufficient documentation.

He states that the person documenting the most direct line of descent from the Civil War veteran will receive the medal at the end of a six-month period following submission of the claim. "The six-month period will enable verification of the claim and ample time for any secondary claimants to come forward," Armstrong explained. "In the case of equal claims, the person who submitted the earliest postmarked documented claim to the Department will be awarded the medal." The Archives and History Division will accept research and documented claims until April 12, 1985.

A list of all unclaimed medals is available in the current WEST VIRGINIA HISTORY, Volume 45, a journal of historical articles, which is available at a cost of $8.00 by writing the Department of Culture and History, Cultural Center, Capitol Complex, Charleston, West Virginia

25305. Identification and information on Union soldiers for whom unclaimed medals remain may be obtained by writing the same address.

ALLEGANY CO., MD (10th Infantry)
Rhodes, John W. Company I
BALTIMORE, MD (1st Cavalry)
Cain, Edward Company C
BARTON, MD (2nd Vet. Infantry)
Brooks, Solomon C. Company C
Feevay, August Company C
HAGERSTOWN, MD (1st Cavalry)
Turner, William J. Company D
NORTH BRANCH, MD (6th Cavalry)
Backeus, Edmund Company B
OAKLAND, MD (6th Infantry)
Bosley, William T. Company O
Louran, Enoch Company O
Markly, Isaiah Company O
McCroby, Samuel A. Company O
McGloflin, Lemuel Company O
Nee, Thomas Company O
Richards, Alfred Company O
Richards, Ernest Company O
Thomas, Abraham Company O
Thomas, Daniel Company O
OAKLAND, MD (3rd Cavalry)
Ambrose, Samuel S. Company B
Nethkin, Francis Company B
Sanders, Henry G. Company B
Simpson, William S. Company B
WESTERNPORT, MD (2nd Vet. Infantry)
Kight, James P. Company C
Kight, William H. Company C

ROOTS—BBS

Now there is an online bulletin board just for genealogists. Called ROOTS-BBS, it is for anyone and everyone interested in searching out ancestors and the application of computers to that type of research. Best of all, it is free for the price of a telephone call.

Simply set your modem to 8/N/1 and dial (415)584-0697 in San Francisco. The Board supports 300 and 1200 baud. You will be asked for your name and then presented with easy-to-follow menus. What you will find is a wealth of information for genealogists. For example, where to search for East European (German) records, where to find Italian vital records, tips on getting Irish church and civil records, and a first-hand account of a beginner's foray into the world of genealogy. Also available are programs that will compute a soundex value for any name, compute birthdate from tombstone ages, print a five generation pedigree chart, let you configure your Epson printer from an online menu, and much more. If that hasn't struck your fancy, then how about free file management software or free communications software? And for the really hard-core, there are lists of other public bulletin board systems.

Questions and surname inquiries are encouraged. So, if you have a question, need help, want to help other researchers, or simply want to chat with another micro-rooter—call ROOTS-BBS (415)584-0697 and join in!

NEW SCHEDULE EFFECTIVE AT HISTORIC ST. MARY'S CITY

A new schedule of operations at Historic St. Mary's City will become effective on January 1, 1985.

The Visitor Center will be open 10:00 a.m.—5:00 p.m. every day except New Year's Day, Thanksgiving, and Christmas to allow visitors to view a slide show and the archaeological exhibit and browse in the gift shop. Visitors can also enjoy Historic St. Mary's City's townlands every day of the year from dawn to dusk.

The annual Maryland Day celebration in March will officially begin the "living history season" which will continue through the last Sunday in November. During this period, the State House, Farthing's Ordinary, Godiah Spray Tobacco Plantation, and Chancellor's Point Natural History Center will be open Wednesday through Sunday 10:00 a.m.—5:00 p.m.

Also effective on January 1 are new admission rates. The adult admission fee will be $3.00, and the children's admission fee will be $1.50. Group tour and senior citizen rates will be $2.00.

INDUSTRIAL ARCHAEOLOGY

A conference on historical and industrial archaeology will be held at the Hagley Museum and Library, Wilmington, Delaware on Friday, April 26, 1985. Entitled, "Evolving Archaeological Approaches to 19th Century Industrial Communities," the conference will feature talks by Edward S. Rustch of Historic Conservation and Interpretation, Inc. and Anthony Wallace of the university of Pennsylvania. David Ames, University of Delaware, will chair the conference and David Orr, National Park Service, will provide comment.

Preceding the conference Robert Howard will conduct a tour of the Hagley industrial site, emphasizing the development and use of water

power. At a luncheon Frank McKelvey will speak on the archaeological contribution to site interpretation. Both Howard and McKelvey are curators at the Hagley Museum.

Write or phone for details to the Hagley Center for Advanced Study, Box 3630, Greenville, Wilmington, Delaware 19807, telephone—302-658-2400, extension 236.

Maryland Historical Magazine is published quarterly by the Maryland Historical Society, 201 West Monument Street, Baltimore, MD 21201, for its members. There are various classes of membership: individual, $20; family, $30; contributor, $50; patron, $100; sponsor, $250; associate, $500; benefactor, $1,000. Membership benefits include free admission to the Museum and Library, invitations to lectures and exhibit openings, a 10% discount in the Museum Shop and Bookstore and on all Society publications, and subscriptions to *News and Notes* and *Maryland Historical Magazine*. For additional membership information please write or telephone the Society, (301) 685-3750.

Correspondence concerning submission of manuscripts, books for review, and all editorial matters should be sent to the Editor, *Maryland Historical Magazine*, at the Society's address. Manuscripts should be submitted in duplicate, double-spaced, and prepared according to *The Chicago Manual of Style* (University of Chicago Press, 1982). Because manuscripts are evaluated anonymously, the author's name should appear only on a separate title page. For return of manuscript, please include a self-addressed, stamped envelope.

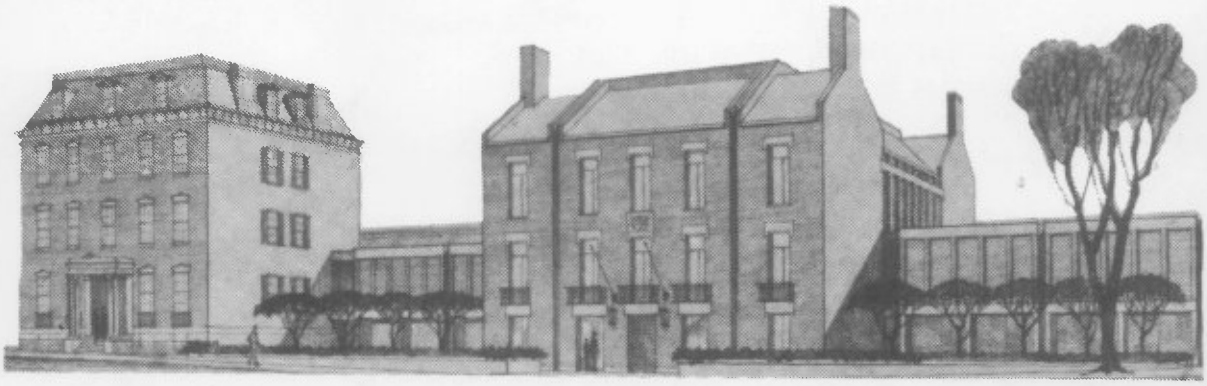

The Museum and Library of Maryland History
The Maryland Historical Society
201 W. Monument Street
Baltimore, Maryland 21201

Museum and Library: Tues.–Fri. 11–4:30; Sat. 9–4:30
For Exhibition Hours and Information, Call (301)685-3750