SC5593-9-44

DESCRIPTION OF PART OF LOT 19, BYFORD COURT, CHESTERTOWN, KENT COUNTY, MD.

Beginning for the same at an iron pipe on the southeast side of Byford Court (50' wide), said point being the northernmost corner of the herein described lands and the northwest corner of Lot 18 of Byford Court subdivision; and running, thence, by and with said Lot 18 S 18 00 E - 305' more or less to the mean high waters of the Chester River, passing over a concrete monument on the bank of said river; thence, by and with the mean high waters of the Chester River in a southwesterly direction 160' more or less to the center of a tidal stream and the lands of Riverside Terrace; thence, by and with the centerline of said stream and the lands of Riverside Terrace N 52 00 W - 40' more or less to a new division line between the herein described lands and the remaining lands of Lot 19, Byford Court; thence, by and with said division line, which is the centerline of said stream, N 51 02 50 W - 200.18' to the southeast side of Byford Court; thence, by and with the southeast side of said road N 43 32 E - 139.22' to a point and along a curve to the right with a radius of 567.27 and the length of which is 180.31' to the place of beginning. Containing in all 1.45 acres of land, more or less.

February 16, 1991.

William R. Nuttle.

COPY

WILLIAM R. NUTTLE
Registered Surveyor
CHESTERTOWN, MD. 21620

January 23, 1991.

Elmer:

Let me know when you are ready for the mylar prints and the description.

Bill

Horsey

May 24, 2001

							5000	5000
A1	A2	S18° 00' E	98.66				4906.17	5030.49
A2	A3	L165° 37' 20"	167.38				4739.12	5041.07
A3	A4	L54° 15' 40"	138.19				4812.58	4924.03
A4	5	L115° 50' 30"	67.08				4879.26	4931.36
A3	A3A	R100° 04' 40"	49.73				4733.53	5090.48
A2	3	L160° 13' 50"	59.64				4846.56	5028.65
A1	A3A	S18° 45' 17" E	281.41					
A1	X1	S51° 53' 04" W	179.55					
X1	X2	S47° 13' 18" E	567.27				4503.90	5275.11
X2	5	N42° 28' 58" W	508.98	(58.3)				
A1	3	S10° 34' 34" E	156.09	(22.20)				

shift ccw 0° 45' 17"

R = 567.27

Lc = 180.31

Δ = 18 12 42

C = 179.55

N 43° 32' E
09 06 21
52 38 21

567.27
508.98
58.29

N 52° 38' 21" E - 179.55 N 51° 53' 04" E

N 43° 32' E - 139.22 N 42° 46' 42" E 47 13 18

S 51° 02' 50" E S 51° 48' 06" E

N

1584- Heidi B. Hollomon 265/142
1563 Stephen M. O'Donovan 181/243

Hollomon 265/142
Parcel 1
Begin SE side Queen at pt. NE 152' from inter w/ Queen N45°E - 66 to Lot 1 Wash Coll.
w/s S79°E - 74.9 to beginning
w/s S45°W - 115
N45°W - 60 to begin
Parcel 2 - 15' strip along SW side (my survey)

O'Donovan - 181/243 -
Unit 5 of Riverside Terrace
see plat EHP 2/57 ; EHP 2/105

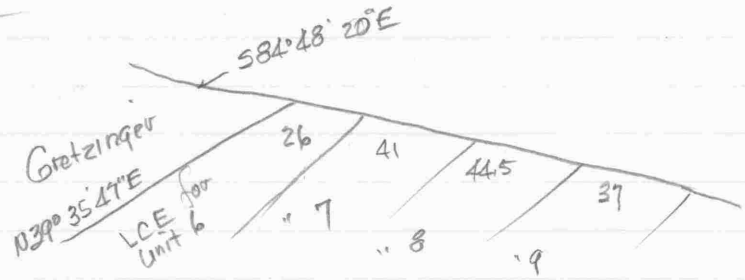

LCE = Limited common element

A-B - N 76° 38' 10" W - 230.80 5053.35 4775.45

Intersect - N 43° 32' E 96.66 (B, A)

N 52° 00' W 200.47 (C)

B - D N 43° 32' E - 100 5125.85 4844.33

D D - A S 51° 02' 47" E - 200.18

A - B - N 76° 38' 10" W - 230.80
B - D N 43° 32' E - 100
D - A S 51° 02' 50" E - 200.18

} 9976 = 0.229 Ac.

R = 567.27
L = 180.31
Δ = 18°12'42"
C = 179.55

09 06 21
43 32
52 38 21

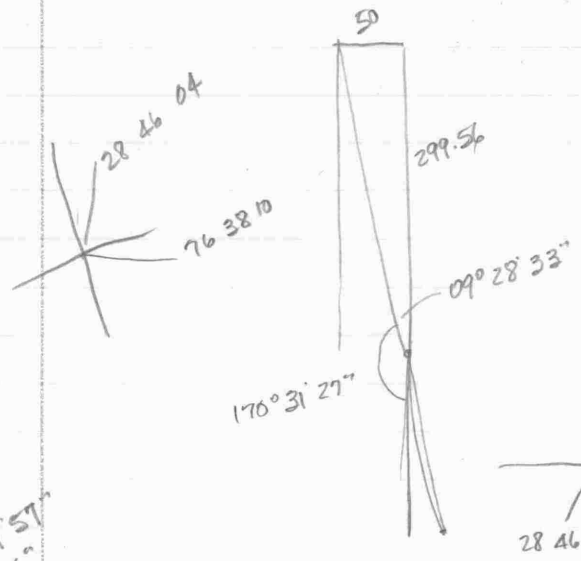

R = 567.27
LC = 42.35
Δ = 04°16'38"
C = 42.34

179 59 60
09 28 33
170 31 27
02 08 19
172 39 46

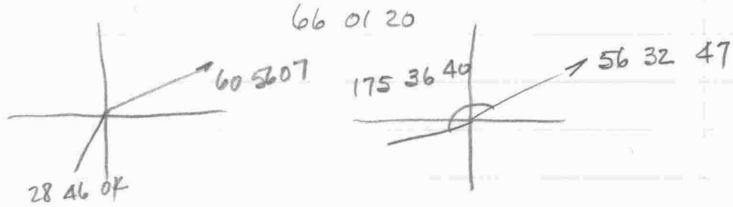

R147°49'57"
R74°35'46"

A1 - A2	- S 60°56'07" W - 296.75	4855.84	4740.62
A1 - X1	S 66°01'20" W - 112.78		
X1 - X2	S43°32' W - 352	4698.98	4654.50
D. A2 - X2	S28°46'04" W - 178.95		

Elmer Horsey
Lot 19, Byford Court
Topo

Sept. 7, 1988.

9.6
1.7
11.3

3.50
6.80
10.30

TELEDYNE

NO. 448

T @ A1, BS A2				H.I. =	11.30
top bridge			9.60	1.70	✓
top curb	R102°30'	104	9.47	1.83	✓
"	L163°00'	8	4.98	6.32	✓
"	L85°35	67	1.10	10.20	✓
14" spruce	L40°45	22	6.1	5.2	✓ low area
20" bass	"	30	—		✓
toe slope	L04°55'	75	7.7	3.6	✓
" "	L01°00'	144	7.7	3.6	✓
24" syc	R09°15'	142	8.4	2.9	✓
20" mulb.	R12°15'	148	—		✓
edge marsh	R16°15'	128	-01°20 8.0	0.3	✓
"	R23°25	72	-01°30 8.0	1.4	✓
"	R63°45	35	9.1	2.2	✓
triple 12" locust	L55°05'	37	2.0	9.3	✓
12" spr.	L23°40'	62	2.4	8.9	✓
fire plug	R99°50	7	—		✓
A1	0°	0'	5.2	6.1	✓
T.P. gr.	R03°45	152	7.80	3.50	✓
T @ A2, BS A1				H.I. = 10.30	
A1	0°	278			
A3	R34°58	178			

10.30
1.53
8.77
11.50
20.27
2.52
17.75
5.57
23.32

TELEDYNE
NO. 448

T @ A2 (cont)					
20" maple	L13°50'	103	6.5	3.8 ✓	
"	L21°45	74	5.4	4.9 ✓	
edge marsh	L57°30'	84	9.0	1.3 ✓	8' to t.b.
ridge	L15°10'	60	5.0	5.3 ✓	
"	R40°20'	9	3.9	6.4 ✓	
sw.	"	20	4.7	5.6 ✓	
top	"	30	3.3	7.0 ✓	
sw	L01°45	53	5.6	4.7 ✓	
top.	R07°20	54	3.5	6.8 ✓	
16" maq.	R06°15	103	2.4	7.9 ✓	
base bank	R13°35	122	1.4	8.9 ✓	
end maq.	R18°00'	95	1.8	8.5 ✓	
"	R42°20'	66	1.1	9.2 ✓	
maq	"	60	—		
t.p. base	R36°15	87	1.53	8.8	✓
T @ A3, BS A2				H.I. = 23.32	
t.b.	L21°30'	81	8.1	15.2 ✓	
"	R18°45	54	6.2	17.1 ✓	
24" locust	R40°50'	52	5.4	17.9 ✓	
end cedar	R38°40'	62	8.0	15.3	✓
bend in cedar line	R75°05'	70	7.9	15.4	✓
end cedar	R115°15'	114	-02°40 3.0	15.0	✓
16" ch.	R120°00'	102	6.7	16.6	✓
10" loc.	R117°15'	100	—		✓

T@ A3		cont.			
24" ch.	R115° 20'	87	6.3	17.0	✓
10" loc.	R99°35	76	6.8	16.5	✓
16" bass	R88°25	54	5.2	18.1	✓
16" loc.	R82°20	52	—		✓
20" bass	R70°25	50	—		✓
12" "	R58° 50'	43	5.3	18.0	✓
gr.	R24°45	29	5.4	17.9	✓
12" bass	R144°35	14	—		✓
10" loc.	R145°00'	33	4.6	18.7	✓
30" oak	R124°05	48	4.1	19.2	✓
36" bass	R145°10'	91	4.9	18.4	✓
t.b	R178°00'	85	4.4	18.9	✓
I.P.	R179°00'	105	8.24	15.08	✓
top. curb	"	110	8.78	14.54	✓
"	R153°45	112	10.13	13.19	

Lot 19, Byford Court
Re-setting corners

April 5, 1988

47.07
42.34
4.73

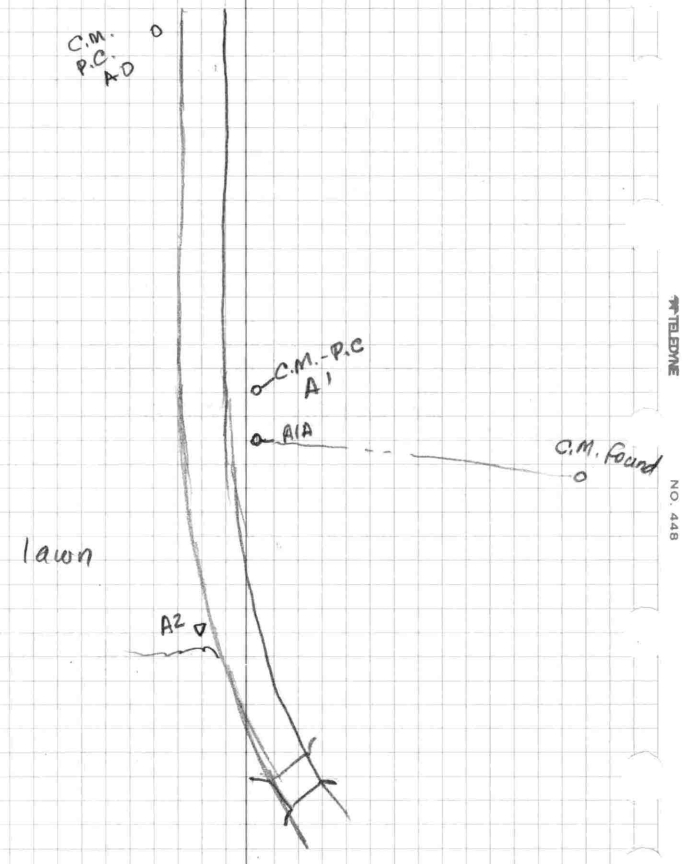

TELEDYNE
NO. 448

A1	A0	A1A	L172°39'46"	42.34	I.P. & G.P. set
				296.75	
		A2	L175°36'38"	296.99	02° 18'
		"	L351°14'	—	
A2	A1	X2	R147°49'57"	178.95	I.P. & G.P.
X2	A2	PR	R74°35'46"	—	I.P. & G.P. on line

R147°49'57" - 178.95

R151° 32 - 186.88 0°35

16.25
14.22
2.03

R54° 18' 46" 14.22

Elmer Horsey
Byford Court
House location

May 24, 2001

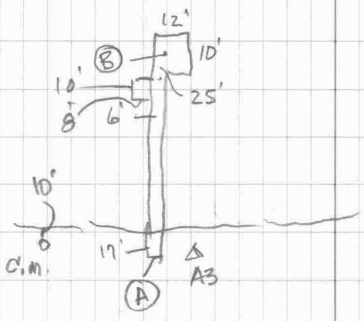

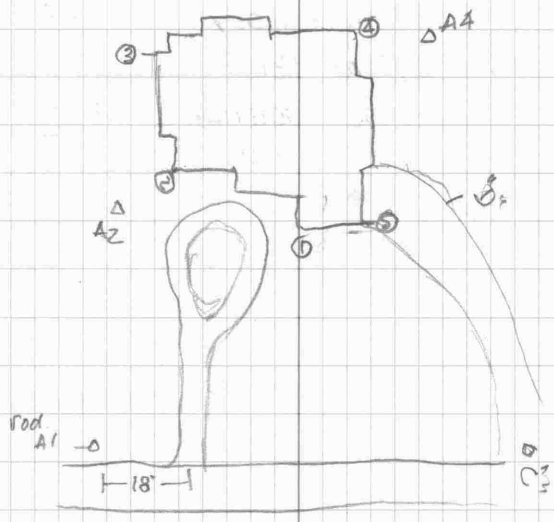

NATIONAL PRINTFAST NO. 446

A2	A1	A1	0°	98.66	
		A3	L165°37'20"	167.38	
		Cor ①	L84°42	79.01	
		②	L106°56'10"	28.25	
		③	L160°13'50"	59.64	
		℄ dr.	L19°54'	25.3	
		"	L77°48	44.8	
		"	L65°25'	64.4	
		"	L33°43'	56.9	
A3	A2	A4	L54°15'40"	138.19	
		C.M.	R100°04'40"	49.73	
		"A"	R125°41	19.3	
		"B"	R156°00'30"	163.76	
		MHW	L143°05'20"	61.5	
A4	A3	Cor ④	L18°33	41.80	
		⑤	L115°50'30"	67.08	
		"C"	L173°12'50"	104.40	
		"D"	L163°00'	26	

5.25
9.7
7.2
21.15

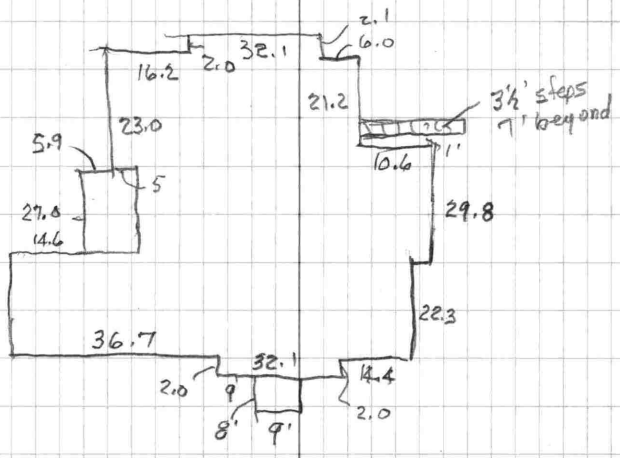

NATIONAL PRINTFAST NO. 446

Elmer E. & Patricia Horsey
P.O. Box
19 Byford Ct.

Zones A6, B, & C

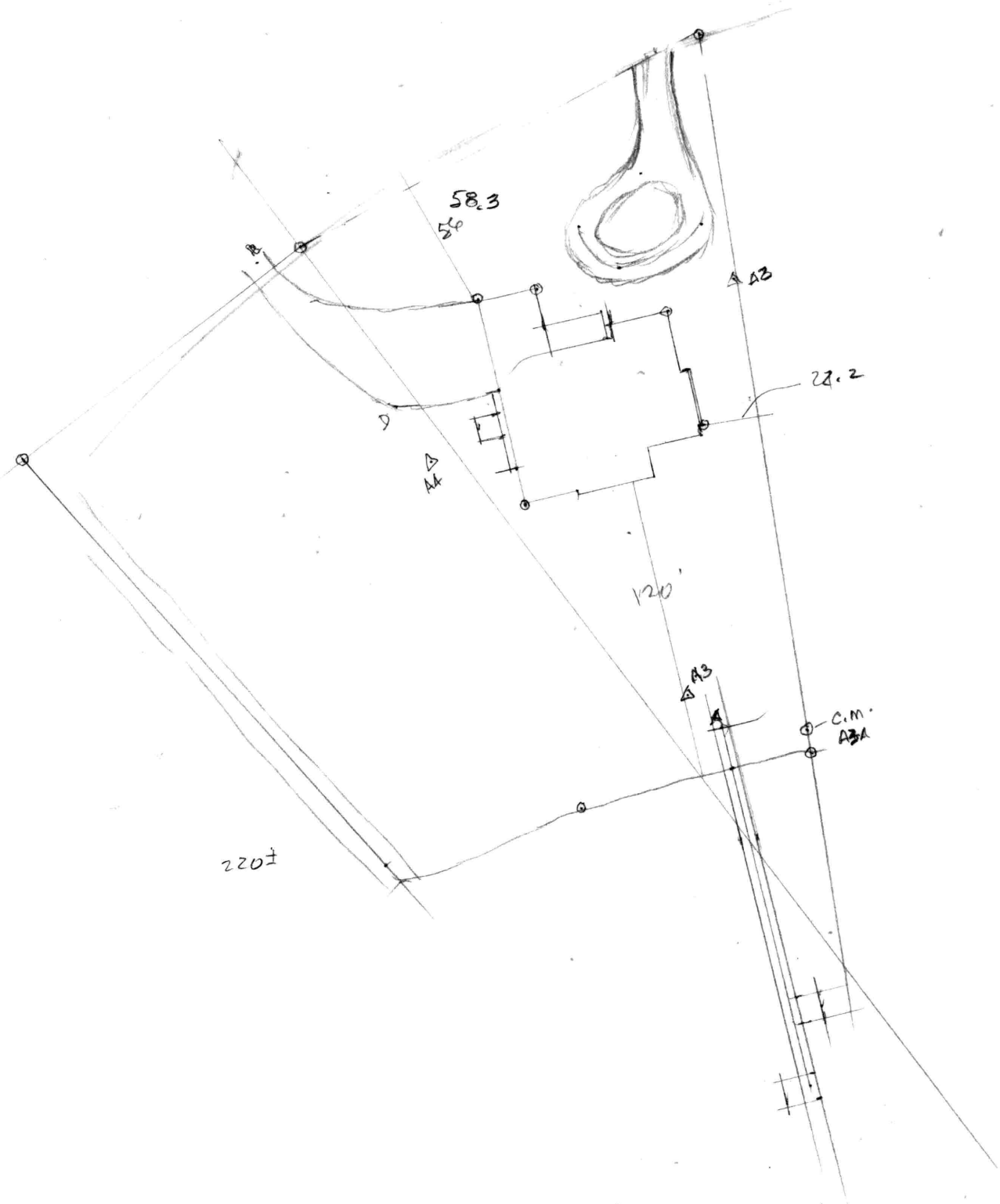
58.3
56
A3
28.2
A4
120'
A3
C.M.
A3A
220±

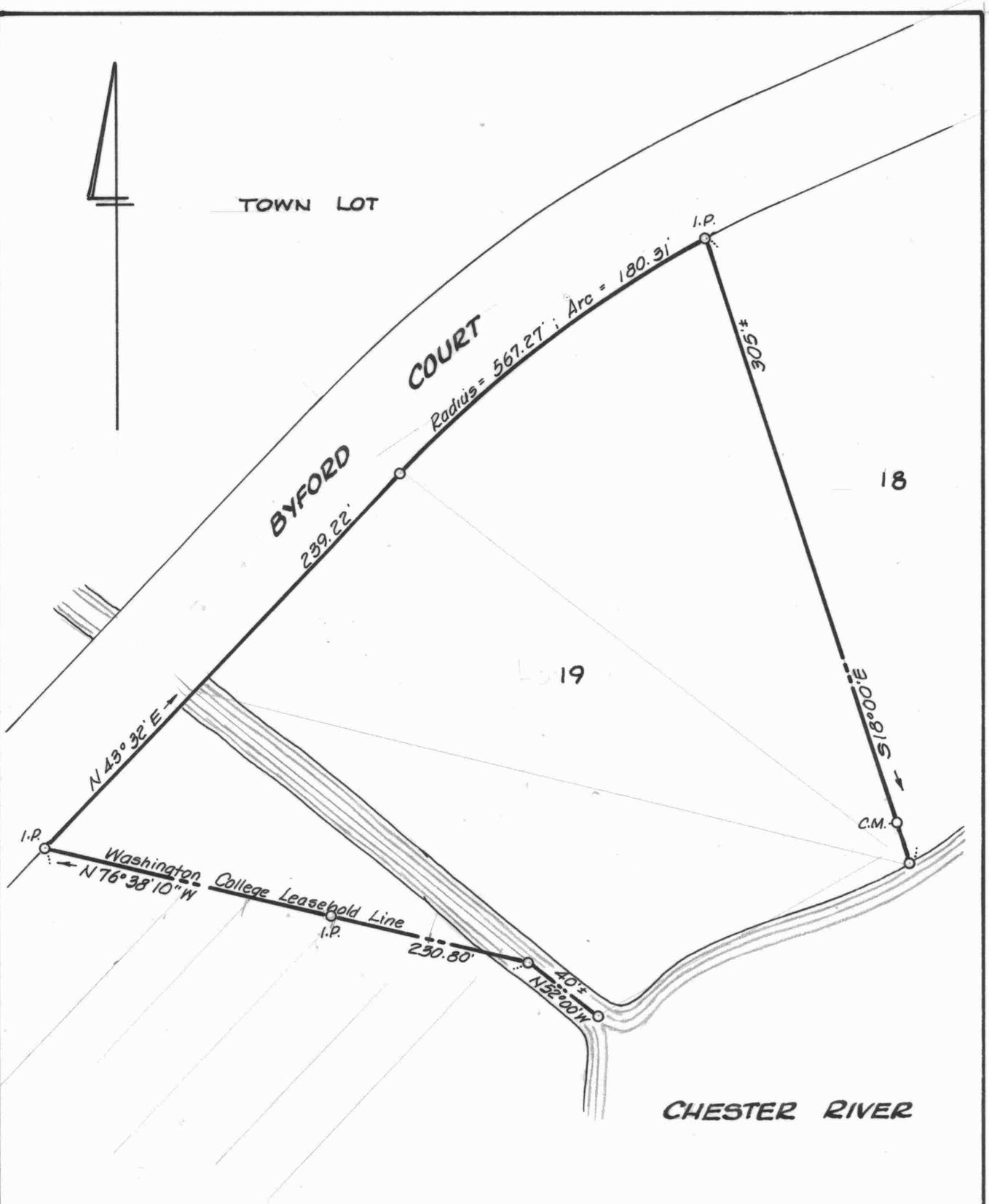

A PLAT OF

LOT 19, BYFORD COURT

CHESTERTOWN, KENT COUNTY, MD.

Scale 1" = 60' April 1988.

William R. Nuttle, Reg. Surveyor
Chestertown, Md.

I.P. = iron pipe
C.M. = concrete monument

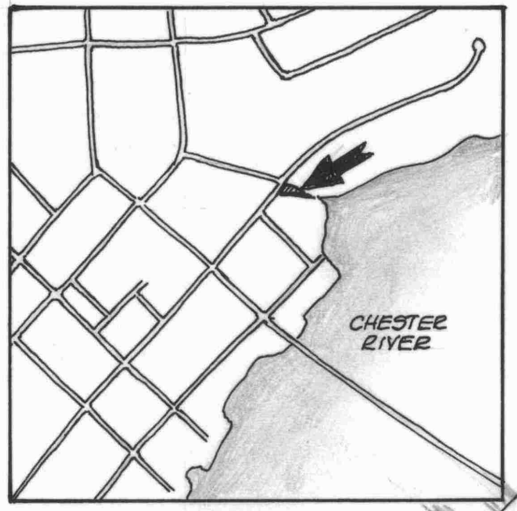

BYFORD COURT

Date _____ Chairman, Planning & Zoning Comm.

Date _____ Kent County Health Officer

Date _____ Chest. Dept. of Public Works

LOT 18

REMAINING LANDS OF
ELMER E. HORSEY
1.45 Ac.±

LOT 19, BYFORD COURT

Washington College leasehold line

N 43°32' E 100.00'

S 51°02' 50" E

0.229 Ac.±

PART OF THE HORSEY LANDS TO BE ADDED TO THE HOLLOMON LOT

N 76°38'10" W

200.18'

230.80'

tidal stream

QUEEN STREET

HEIDI B. HOLLOMON

RIVERSIDE TERRACE

CHESTER RIVER

STATE OF MARYLAND
WILLIAM RAY NUTTLE
No. 4160
REGISTERED
LAND SURVEYOR

PROPERTY LINE ADJUSTMENT

HORSEY & HOLLOMON LANDS

CHESTERTOWN, KENT COUNTY, MD.

Scale 1"=60' Jan. 1991.

William R. Nuttle, Reg. Surveyor
Chestertown, Md.

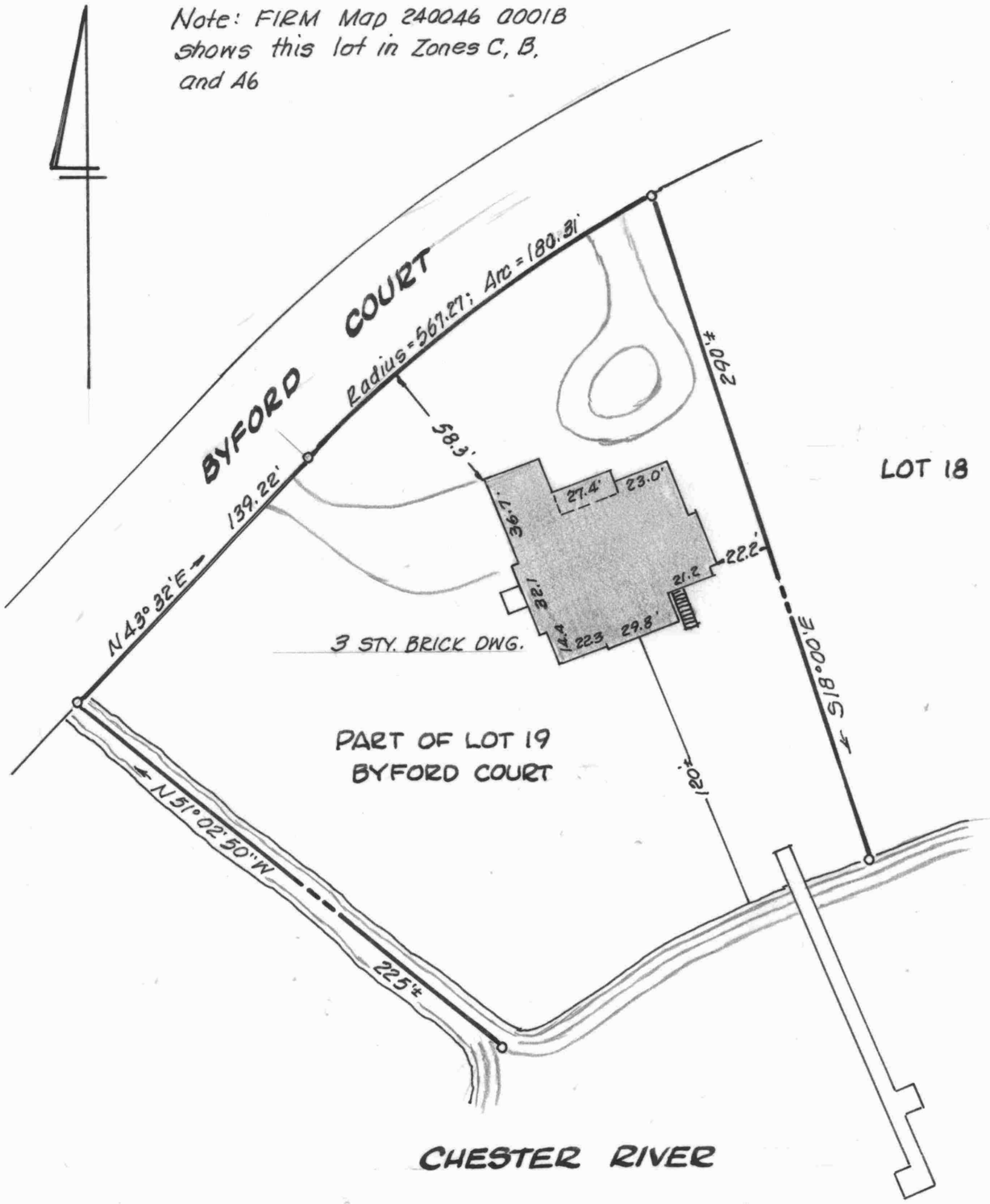

Owners - Elmer E. & Patricia Horsey
Address - 19 Byford Court
Chestertown, Md. 21620.

This is to certify that the improvements indicated hereon are located as shown.

William R. Nuttle
May 24, 2001.

STATE OF MARYLAND
WILLIAM RAY NUTTLE
No. 4100
REGISTERED
LAND SURVEYOR

IMPROVEMENTS LOCATION

ELMER E. HORSEY LANDS

CHESTERTOWN, KENT COUNTY, MD.

Scale 1" = 60' May 2001.

William R. Nuttle, Reg. Surveyor
Chestertown, Md.

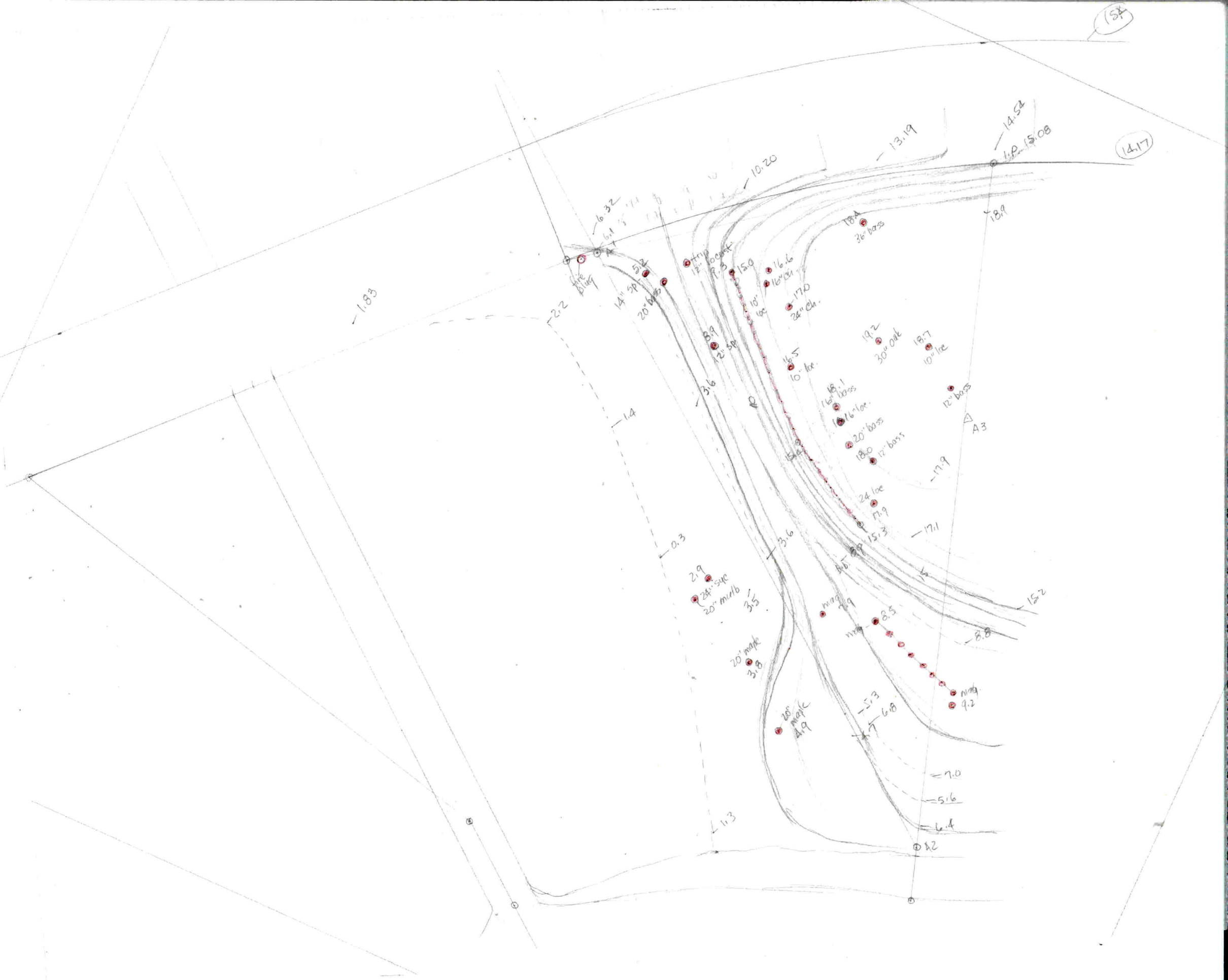

14.17
14.54
I.P. 15.08
13.19
10.20
6.32
6.1
A1
fire plug
1.83
2.2
14" sp
20" bass
5.2
trip
12" locust
9.3
15.0
16.6
16" ch.
17.0
24" ch.
10" loc
18.4
36" bass
18.9
8.9
12" sp
16.5
10" loc.
19.2
30" oak
18.7
10" loc
18.1
16" bass
16" loc.
20" bass
18.0
12" bass
12" bass
A3
3.6
1.4
17.9
24 loc
17.9
15.3
17.1
0.3
3.6
2.9
24" syc
20" mulb
3.5
mag
7.9
8.5
mag
15.2
8.8
20" maple
3.8
mag
9.2
20" maple
4.9
5.3
6.8
7.0
5.6
6.4
1.3
A2

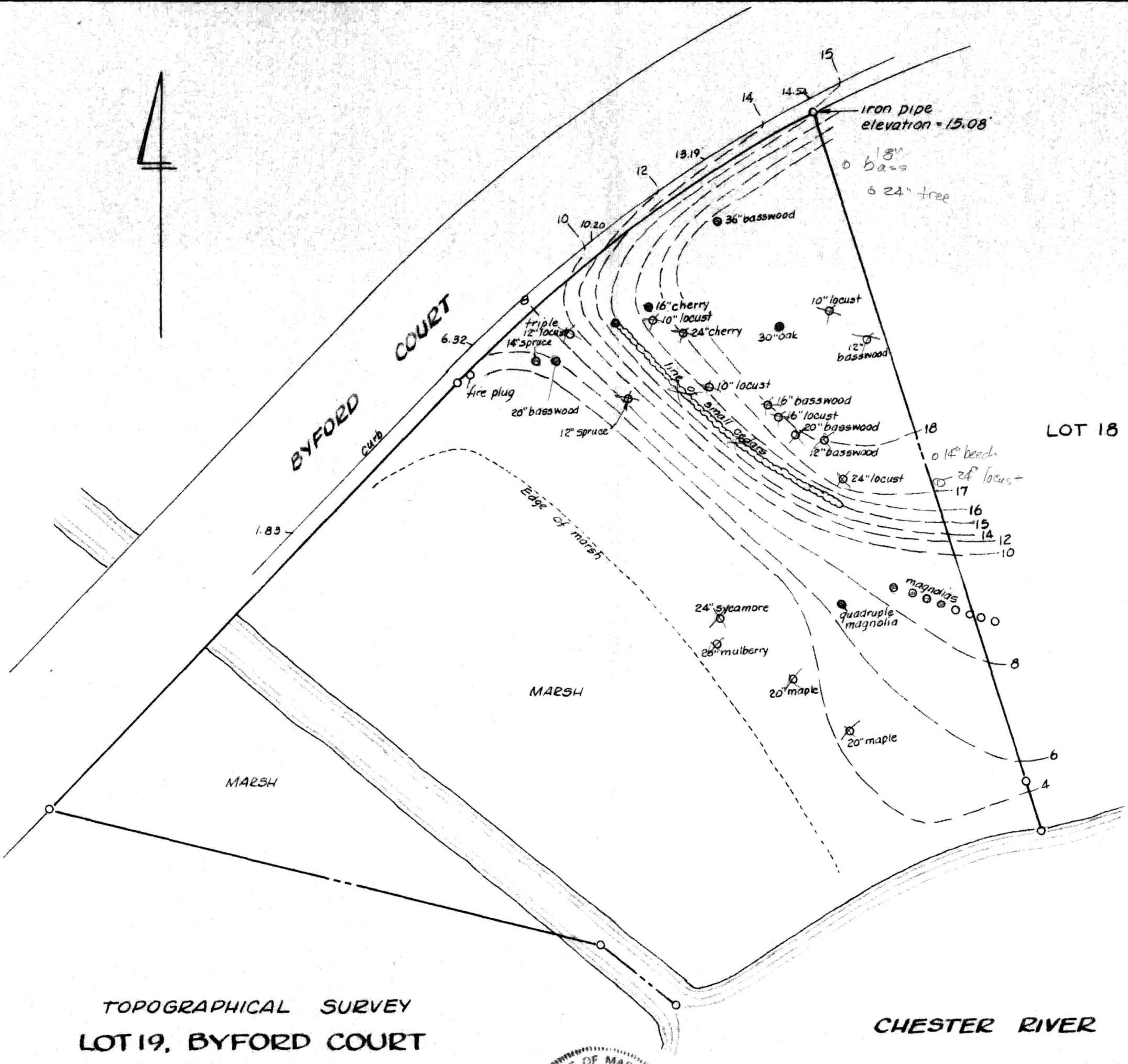

TOPOGRAPHICAL SURVEY

LOT 19, BYFORD COURT

CHESTERTOWN, KENT COUNTY, MD.

Scale 1"=40' Sept. 1988.

William R. Nuttle, Reg. Surveyor
Chestertown, Md.

STATE OF MARYLAND
WILLIAM RAY NUTTLE
No. 6160
LAND SURVEYOR

CHESTER RIVER

Note: Elevations are based upon an elevation of 0' for the mean high water of the Chester River.