SE5593-9-129

SIDE	2	11	N 05°51'20.0" E	81.280	5011.8205	5041.4838

INSTRUMENT SETUP
Instrument point: 2 4930.9646 5033.1915
Backsight point: 1 5000.0000 5000.0000
Backsight Bearing: N 25°40'40.0" W Distance: 76.600
Remarks:

TYPE	FROM	TO	DIRECTION	DISTANCE	NORTHING	EASTING
SIDE	2	12	N 30°21'20.0" E	52.190	4975.9997	5059.5665
SIDE	2	13	N 41°45'20.0" E	77.300	4988.6299	5084.6698
INV	10	12	S 26°47'06.4" E	40.126	4975.9997	5059.5665
INV	12	13	N 63°17'30.1" E	28.102	4988.6299	5084.6698
INV	2	5	N 65°16'55.5" E	128.812	4984.8276	5150.2017
INV	5	4	N 21°59'39.9" W	89.880	5068.1665	5116.5400

INSTRUMENT SETUP
Instrument point: 2 4930.9646 5033.1915
Backsight point: 3 4989.6688 5155.6253
Backsight Bearing: N 64°23'00.0" E Distance: 135.780
Remarks:

TYPE	FROM	TO	DIRECTION	DISTANCE	NORTHING	EASTING
INV	2	3	N 64°23'00.0" E	135.780	4989.6688	5155.6253
INV	3	4	N 26°28'10.0" W	87.690	5068.1665	5116.5400

INSTRUMENT SETUP
Instrument point: 2 4930.9646 5033.1915
Backsight point: 5 4984.8276 5150.2017
Backsight Bearing: N 65°16'55.5" E Distance: 128.812
Remarks:

TYPE	FROM	TO	DIRECTION	DISTANCE	NORTHING	EASTING
TRAV	2	14	N 25°44'34.5" W	76.660	5000.0163	4999.8955
INV	14	4	N 59°42'15.0" E	135.094	5068.1665	5116.5400
INV	1	14	N 81°09'21.3" W	0.106	5000.0163	4999.8955

ProCogo for Windows
Version 2.0 [02.00.00.33]
Copyright(C) 1994-1996 Sarasota Computer Associates, Inc.
All Rights Reserved

New Cogo File
File Name: untitled
Size: 100
Created: 05-14-2002
Last Edited: 05-14-2002
Project No.:
Description:

INSTRUMENT SETUP
Instrument point: 1 5000.0000 5000.0000
Backsight point: 1 5000.0000 5000.0000
Backsight Bearing: N 00°00'00.0" E Distance: 0.000
Remarks:

TYPE	FROM	TO	DIRECTION	DISTANCE	NORTHING	EASTING
TRAV	1	2	S 25°40'40.0" E	76.600	4930.9646	5033.1915
TRAV	2	3	N 64°23'00.0" E	135.780	4989.6688	5155.6253
TRAV	3	4	N 26°28'10.0" W	87.690	5068.1665	5116.5400

INSTRUMENT SETUP
Instrument point: 3 4989.6688 5155.6253
Backsight point: 2 4930.9646 5033.1915
Backsight Bearing: S 64°23'00.0" W Distance: 135.780
Remarks:

TYPE	FROM	TO	DIRECTION	DISTANCE	NORTHING	EASTING
SIDE	3	5	S 48°14'50.0" W	7.270	4984.8276	5150.2017

INSTRUMENT SETUP
Instrument point: 2 4930.9646 5033.1915
Backsight point: 1 5000.0000 5000.0000
Backsight Bearing: N 25°40'40.0" W Distance: 76.600
Remarks:

TYPE	FROM	TO	DIRECTION	DISTANCE	NORTHING	EASTING
SIDE	2	10	N 05°51'20.0" E	81.280	5011.8205	5041.4838

Plat 3A - College Heights - Plat Bk. WHG1-177

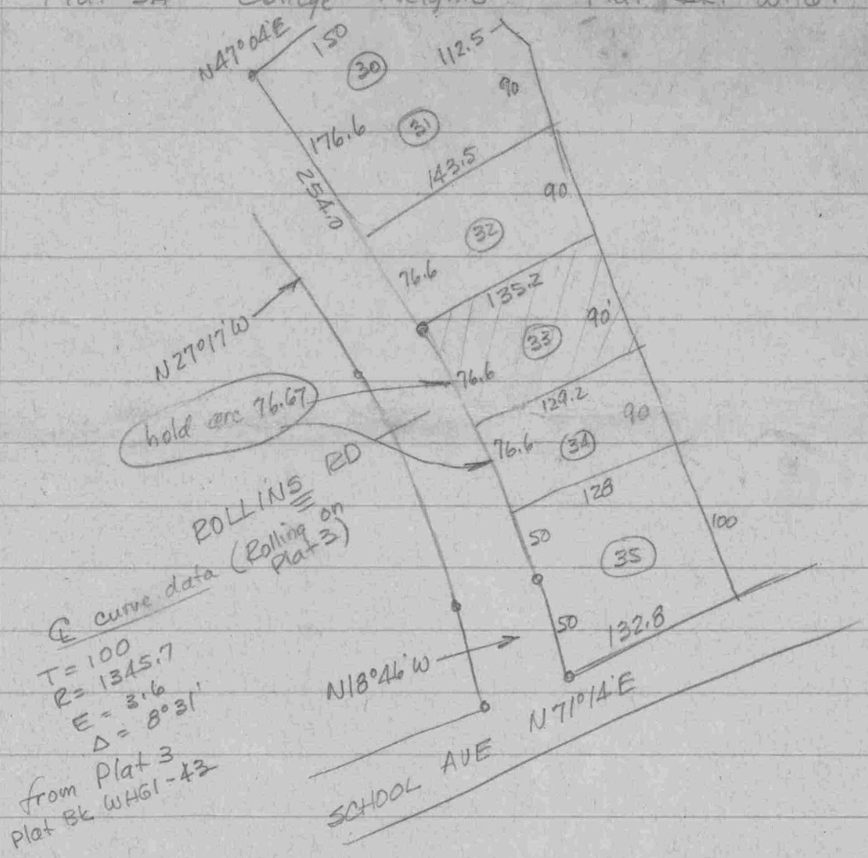

176.6
76.6
253.2

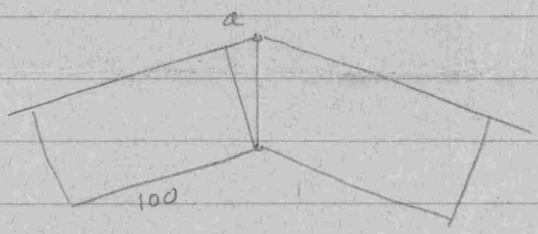

Δ = 08°31'

2|08 30 60
04 15 30

$a = \frac{25}{} \tan 04°15'30" = 1.86$ ~~372~~

$\tan \frac{\Delta}{2} = \frac{\tan}{R}$

$R = \frac{\tan}{\tan \frac{\Delta}{2}} = \frac{101.86}{\tan \frac{\Delta}{2}}$ ~~100 103.72~~

~~R = 1392.98~~

R = 1368.00

1345.7
25
1370.7

$\frac{L}{\pi d} = \frac{\Delta}{360}$

$L = \frac{\Delta \pi d}{360} =$ ~~2985.96 ×~~ 2736

L = ~~207.06~~ 203.34 ✓

tan = 101.86

C = 203.16

R = 1368.00

203.34
126.60
76.74

203.34
50
2|153.34
76.67

R = 1368.00

L = 76.67

Δ = 03°12'40"

T = 38.35

C = 76.66

50
101.86
151.86

Fallaw

June 5, 1975

									5000	5000
	A-B	S71°14'W	132.8						4957.28	4874.26
	B-C	N18°46'W	151.86							
	C-D	N 27°17'W	101.86						5191.59	4778.71
D	D-A	S 49°06'51"E	292.70							
	D-E	N59°43'20"E	135.2							
	E-F	S21°55'10"E	90						5176.26	4929.06
	D-G	S25°40'40"E	76.66						5122.50	4811.93
D	G-F	N65°20'45"E	128.88							
	D-E	N59°43'20"E	135.20							
	E-F	S21°55'10"E	90							
	F-G	S65°20'50"W	128.88							
	G-D	N25°40'40"W	76.66							
	D-X	N27°17'W	254.00						5417.33	4662.28
						460.05			4957.28	4874.26
D	B-X	N24°44'20"W	506.54				211.98		5417.33	4662.28
						234.31			4957.28	4874.26
D	B-D	N22°11'07"W	253.04				95.55		5191.59	4778.71

Lot 33, Plat 3A
Rolling Rd.

Send to Mrs. Filah?

506 Kent

5 copies of plat

24 44 20
22 11 07

02 33 13

R 02° 33' 10" - 253.04
160
93.04

Mrs. W. Robert Fallow
Lot 33, Plat 3A
College Heights

June 17, 1975

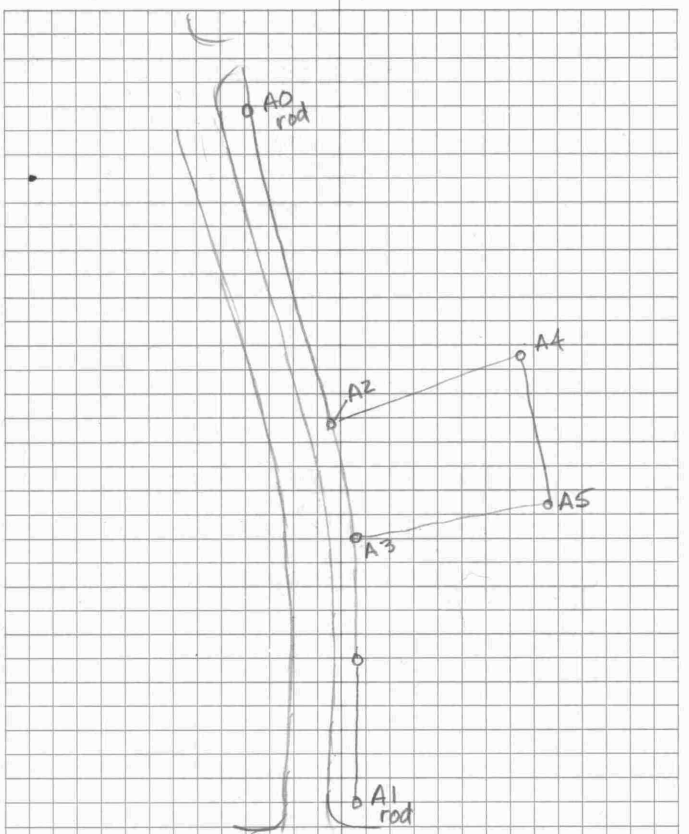
A0
rod
A4
A2
A5
A3
A1
rod

A1	A0	A2	R02°33'10"	253.04	I.P.
A2	A1	A3	L03°29'30"	76.66	I.P.
		A4	L98°05'30"	135.20	I.P.
A4	A2	A5	L81°38'30"	90'	I.P.

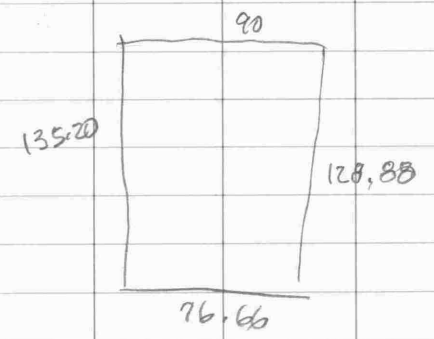

Marge Fallaw
Lot 3B. Plat 3A, College Heights
Locating & resetting cors.

May 14, 2002

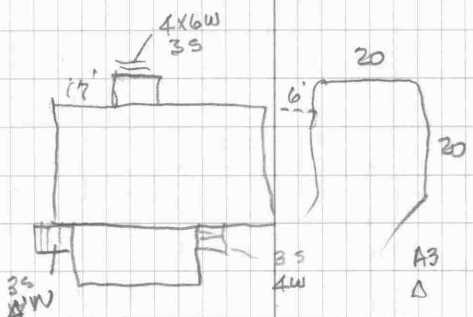

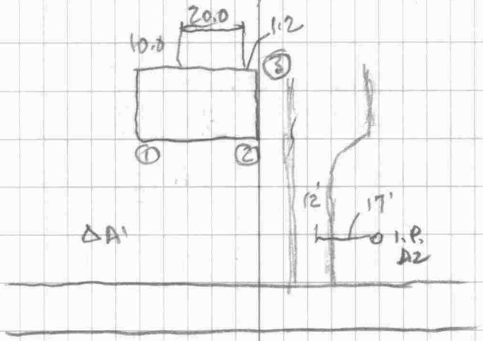

NATIONAL PRINTPAST NO. 446

I.P. A2	A1	A1	0°	76.60
		A3	R90°03'40"	135.78
		cor ①	R31°32	81.28
		②	R56°02	52.19
		③	R67°26	77.30
A3	A2	I.P.	L16°08'10"	7.27
		I.P.	R89°08'50"	87.69
A1	A2	×1	R124°31'18"	0.11

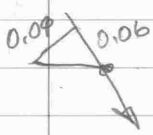

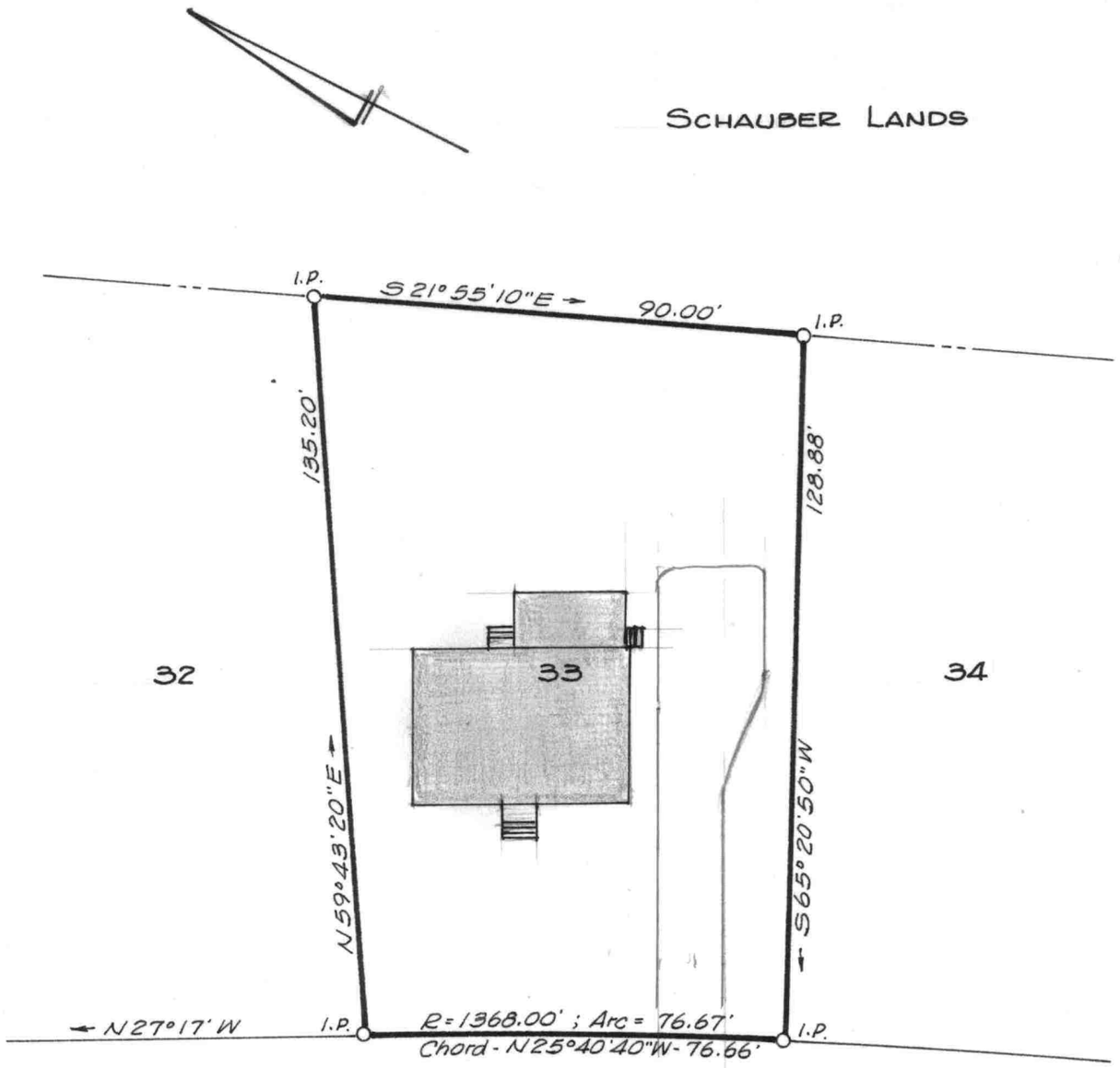

Note: The bearings & distances shown are computed from information found on Plat 3 & Plat 3A, College Heights.

Corners located or replaced May 2002.

STATE OF MARYLAND
WILLIAM RAY NUTTLE
No. 4160
REGISTERED
LAND SURVEYOR

William R. Nuttle

I.P. = iron pipe

LOT 33, PLAT 3A

COLLEGE HEIGHTS

CHESTERTOWN, KENT COUNTY, MD.

Scale 1" = 30' June 1975.

William R. Nuttle, Reg. Surveyor
Chestertown, Md.

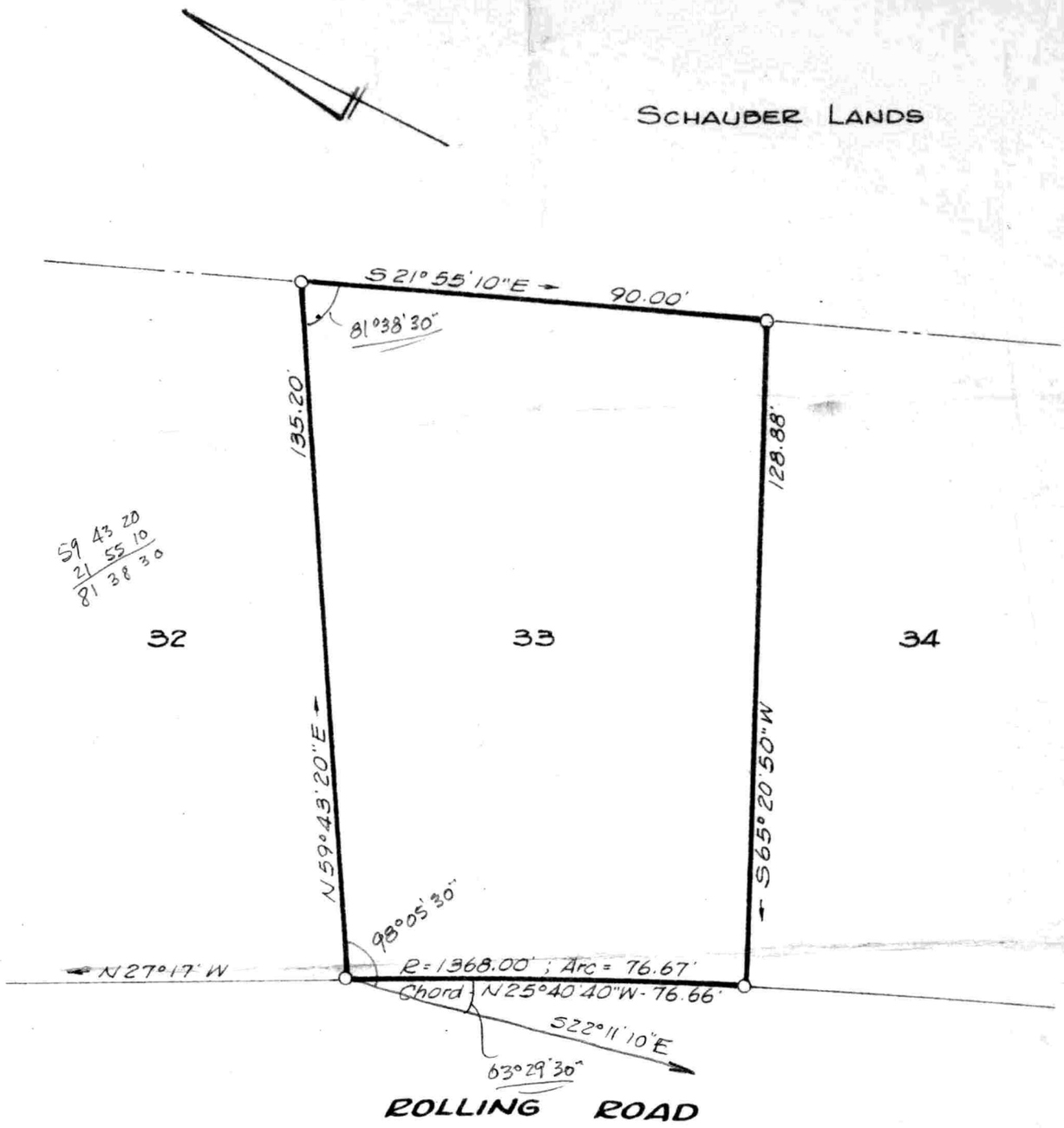

Note: The bearings & distances shown are computed from information found on Plat 3 & Plat 3A, College Heights.

22 11 10
59 43 20
81 54 30
179 59 60
81 54 30
98 05 30

25 40 40
22 11 10
03 29 30

LOT 33, PLAT 3A

COLLEGE HEIGHTS

CHESTERTOWN, KENT COUNTY, MD.

Scale 1" = 30' June 1975.

William R. Nuttle, Reg. Surveyor
Chestertown, Md.

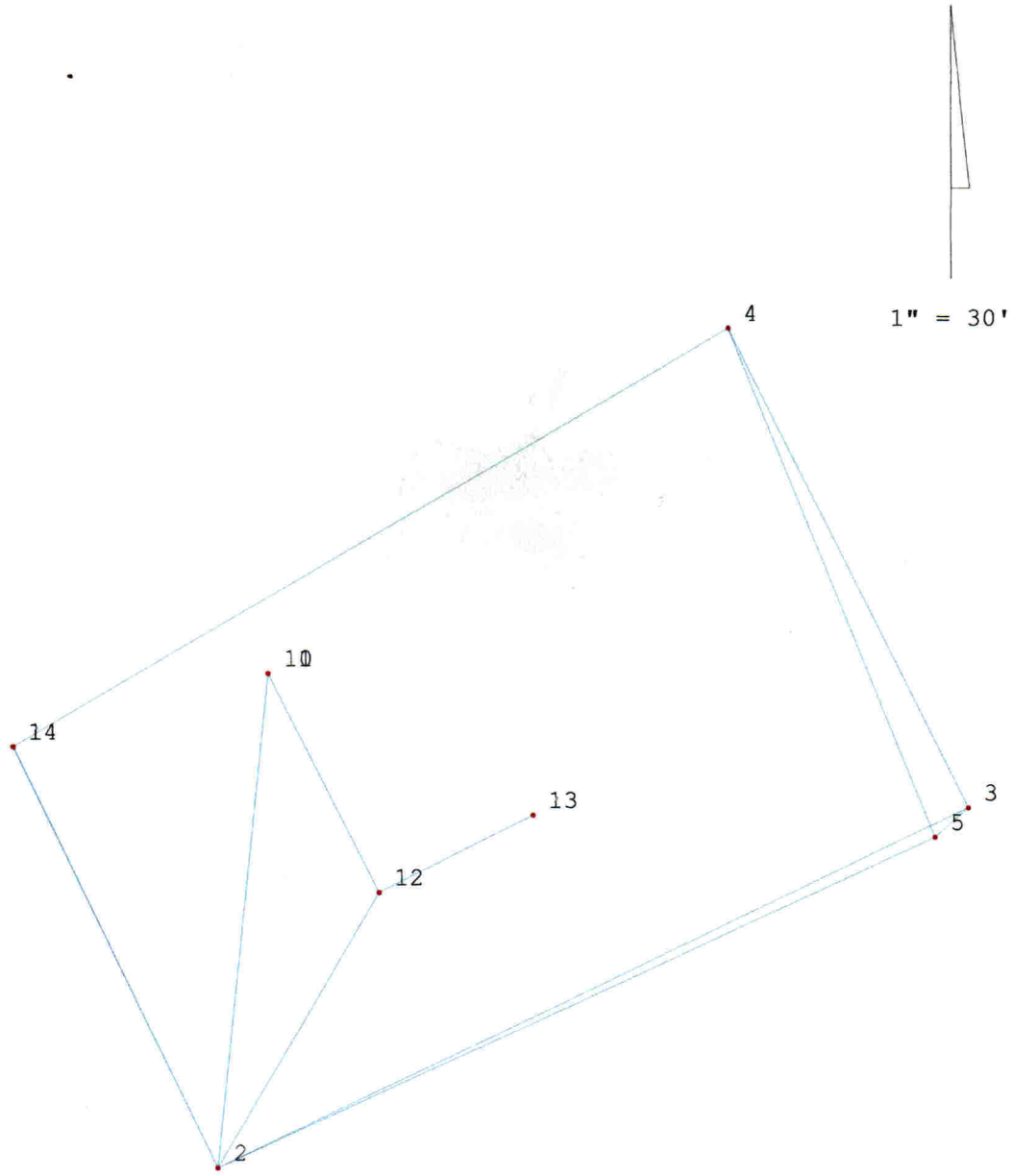
1" = 30'
4
10
14
13
3
5
12
2

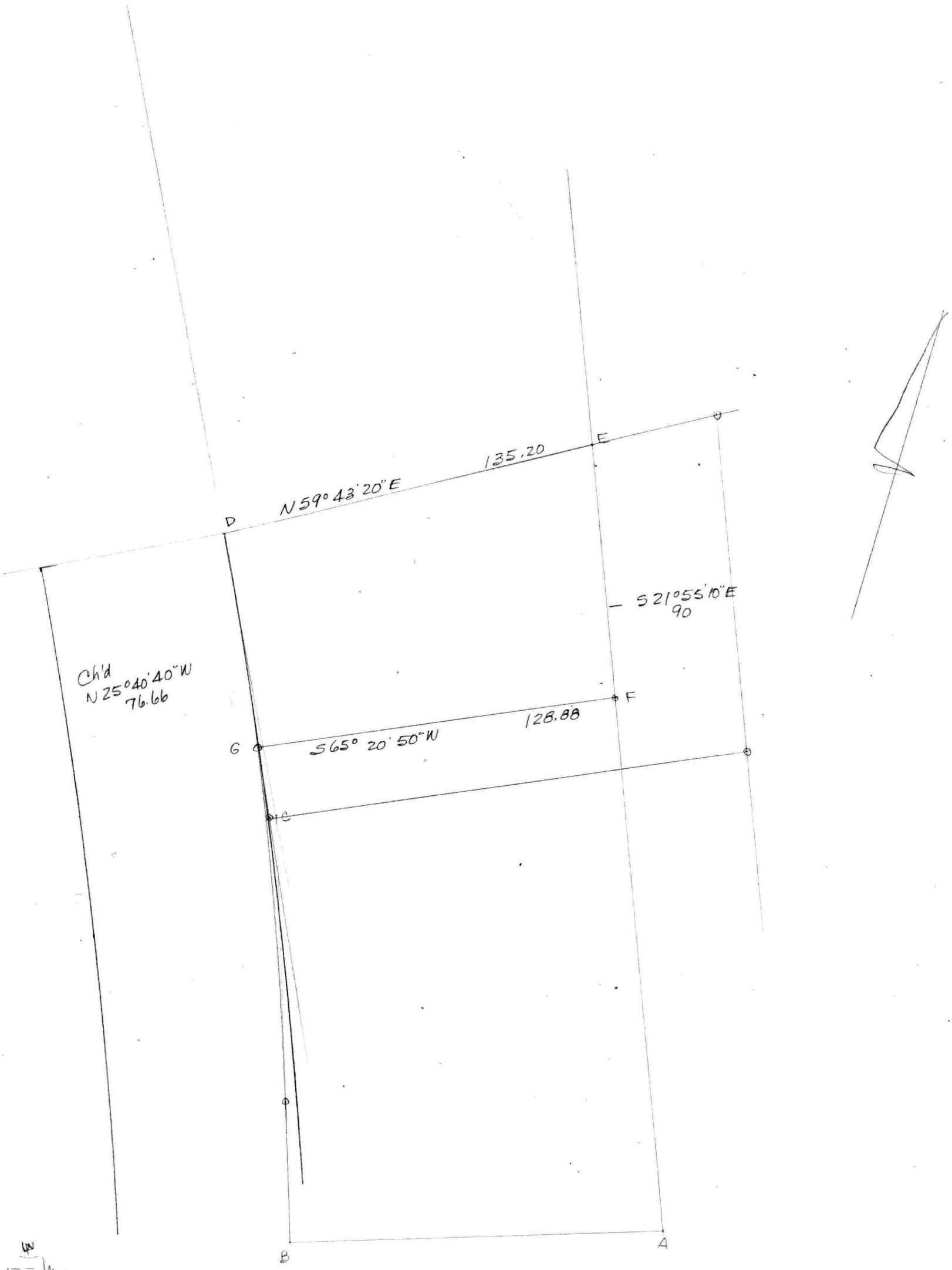

453
3 | 1368
12
15
18

34.2
4 | 1368