SC 5593-4-707

MAP 203

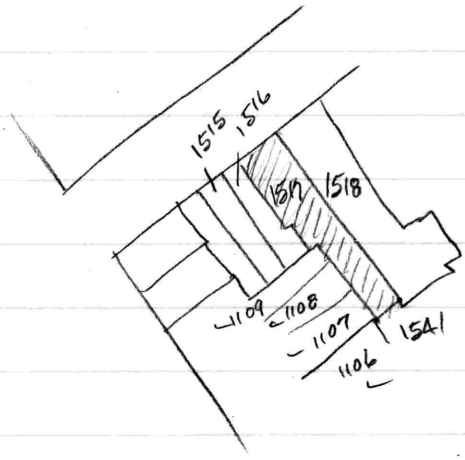

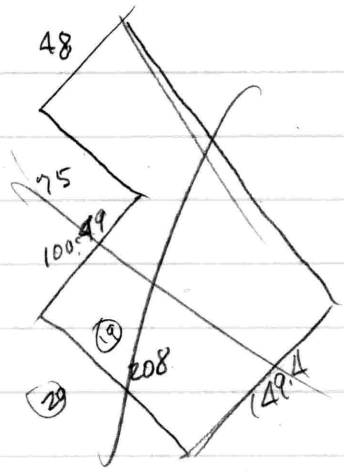

1106	Frank B. Rhodes Jr.	165/27
1107	Mary J. Comegys	147/26
1108	David A. Churchill	MLM 25/419
1109	Peter F. Tapke	4/249
1515	Alice James	1/312
1516	Wm. B. Alexander	147/233
1517	Amy G. Wagner	MLM 1/435
1518	Daniel Hunt	MLM 11/239

Wagner MLM 1/435

Begin SE side Queen (50') at pt. N44°07'E - 200.28 from NE side High on NW side of R/W or alley

w/ Derringer S46°53'E - 73.35

Crossing R/W S42°15'W - 48.65 to iron fence post in 6x6 stone

N45°58'W - 75 bending on NE wall of Simpson's dwg. to Queen

w/s N44°07'E - 47.08 to begin

S45°43'45" CW 0°19'42"

Subject to 1.25 easement for eaves overhang for 107 Queen

12.5
14.7

Wagner - cont.

Begin C.M. on SW side of R/W or alley
approx 8.95' wide, said begin being on S 42°15'W - 48.65
previously conveyed
w/ said line S 42°15'W - 32 to iron fence post in 6x6" stone
w/ Smith & Strong S46°E - 128 to C.M.
N44°E - 32 to C.M. on SW side alley
w/s N46°W - 129 to begin

Alexander 147/233 - 107 Queen
Begin I.P. on SE side Queen (40') at NE cor 105 Queen and
NW cor. herein

w/ Queen N44°07'E - 28 to I.P. & Dixon
w/s S45° 58'E - 80.01
N42°15'E - 7.94
along rear of meathouse S46°E - 18.26 to Smyth
w/s along fence S44°07'W - 36.52 to I.P. & Allspach
w/s N45° 38'W - 98 to begin

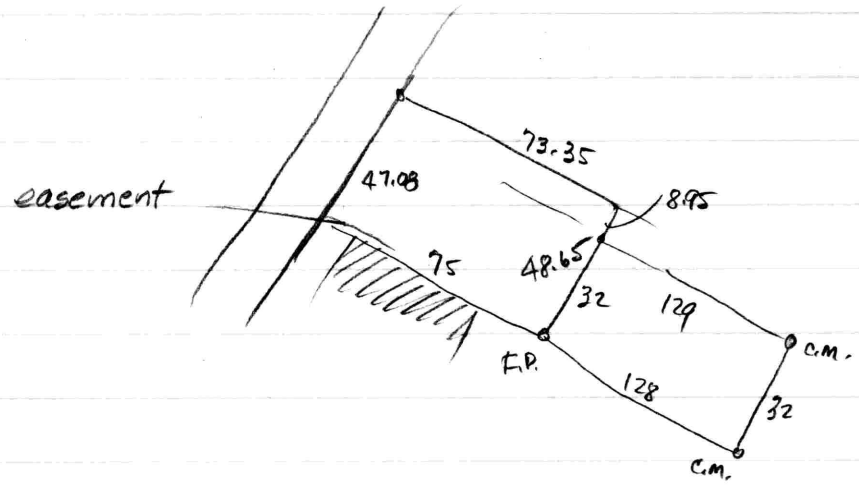

S 46° 53' E - 73.35 S 42° 15' W - 48.65 N 45° 58' W - 75 N 44° 07' E - 47.08	0.21	0.31
S 42° 15' W - 32 S 46° E - 128 N 44° E - 32 N 46° W - 129	0.03	0.01

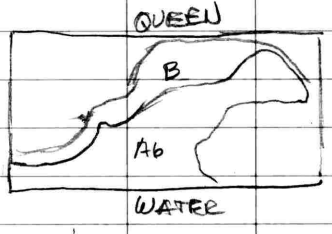

240046 0001 B

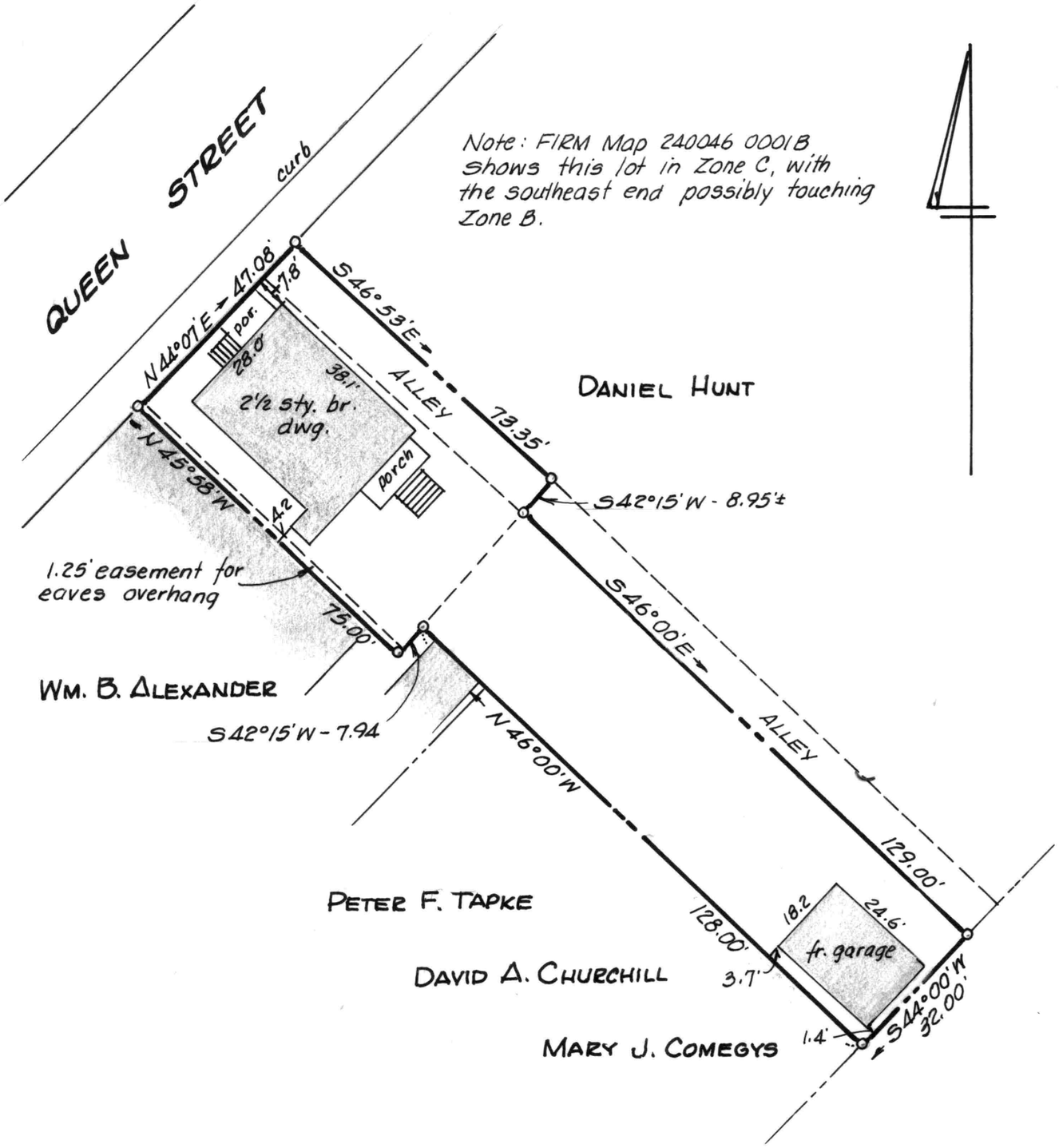

Owner: Amy G. Wagner
Address: 109 Queen St.
Chestertown, Md. 21620

This is to certify that the improvements indicated hereon are located as shown.

William R. Nuttle
Feb. 4, 1994.

STATE OF MARYLAND
WILLIAM RAY NUTTLE
No. 4180
REGISTERED
LAND SURVEYOR

IMPROVEMENTS LOCATION

AMY G. WAGNER LANDS

CHESTERTOWN, KENT COUNTY, MD.

Scale 1"=30' Feb. 1994.

William R. Nuttle, Reg. Surveyor
Chestertown, Md.