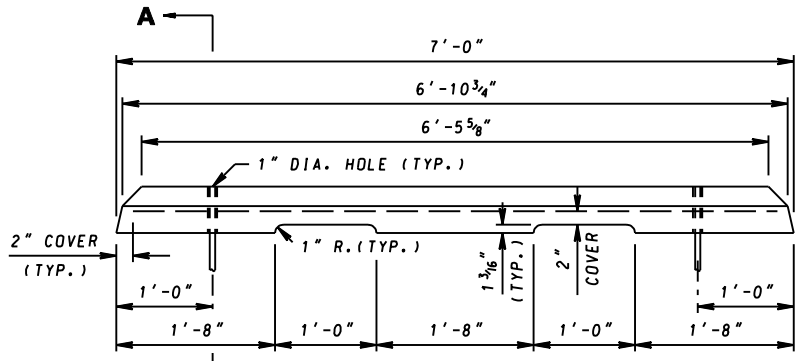

ELEVATION
TYPE I
(AUTOMOBILE)

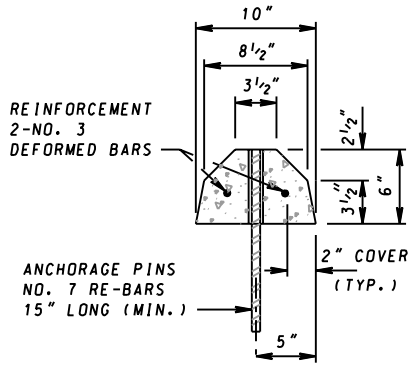

SECTION A-A
(TYPICAL-TYPE I & II)

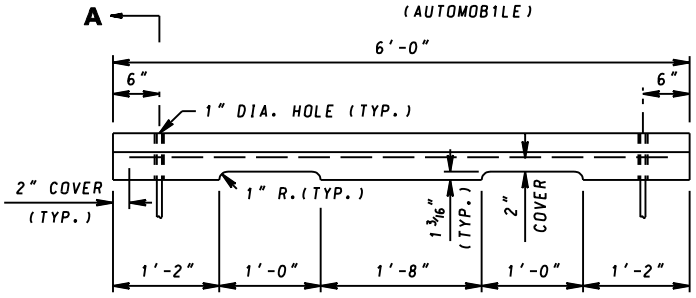

ELEVATION
TYPE II
(AUTOMOBILE)

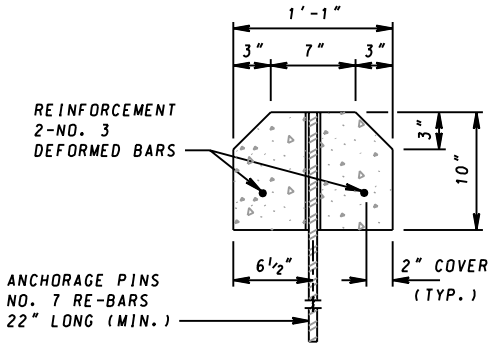

SECTION B-B

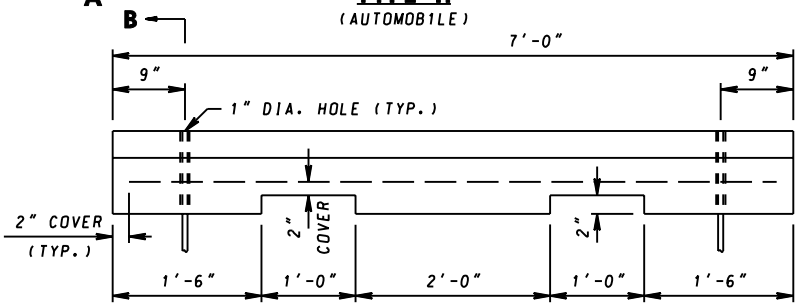

ELEVATION
TYPE III-A
(TRUCK)

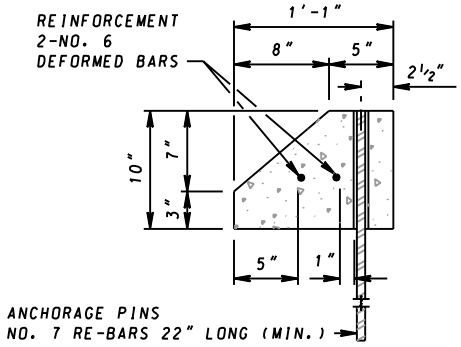

SECTION C-C

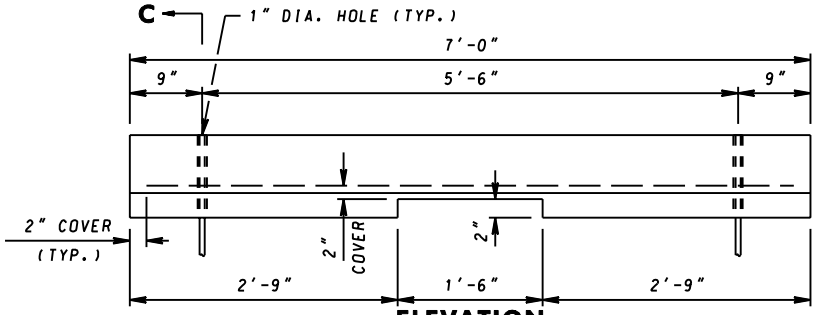

ELEVATION
TYPE III-B
(TRUCK)

NOTE

1. PRECAST CONCRETE WHEEL STOPS SHALL BE LOCATED AS SHOWN ON THE PLANS. THEN SECURED IN PLACE WITH TWO (2) NO. 7 REINFORCEMENT BARS PER WHEEL STOP.
2. COST OF THE REINFORCEMENT BARS WILL BE INCIDENTAL TO THE CONTRACT UNIT PRICE BID PER EACH FOR THE WHEEL STOPS.

SPECIFICATION 608	CATEGORY CODE ITEMS
APPROVED	Kirk G. McCallum DIRECTOR – OFFICE OF HIGHWAY DEVELOPMENT

APPROVAL • SHA REVISIONS		APPROVAL • FEDERAL HIGHWAY ADMINISTRATION	
APPROVAL	10-26-82	APPROVAL	5-17-83
REVISED	10-1-01	REVISED	8-1-84
REVISED		REVISED	
REVISED		REVISED	

Maryland Department of Transportation
STATE HIGHWAY ADMINISTRATION

STANDARDS FOR HIGHWAYS AND INCIDENTAL STRUCTURES

PRECAST CONCRETE WHEEL STOPS

STANDARD NO. MD 634.04