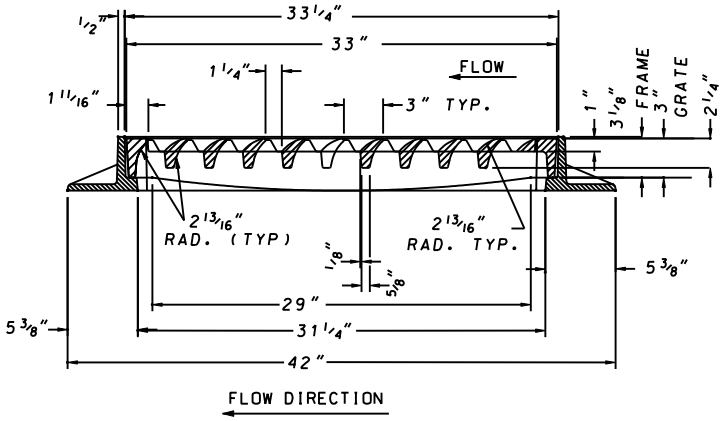

SECTION A–A

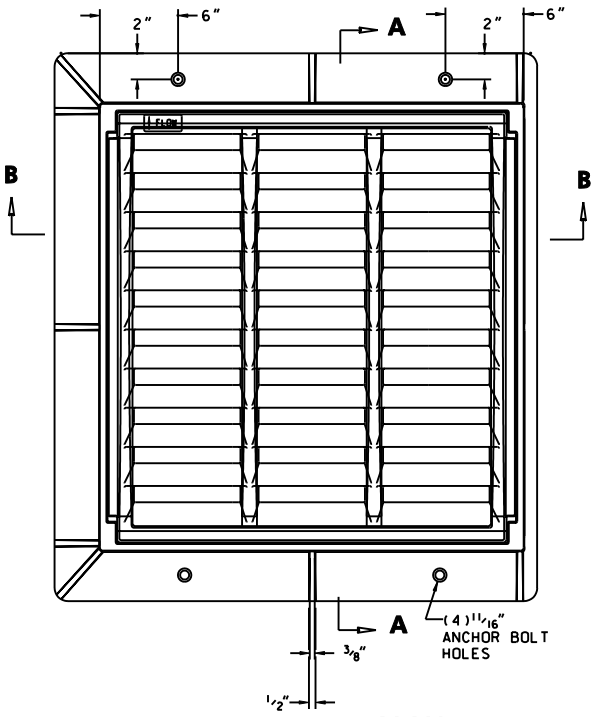

PLAN

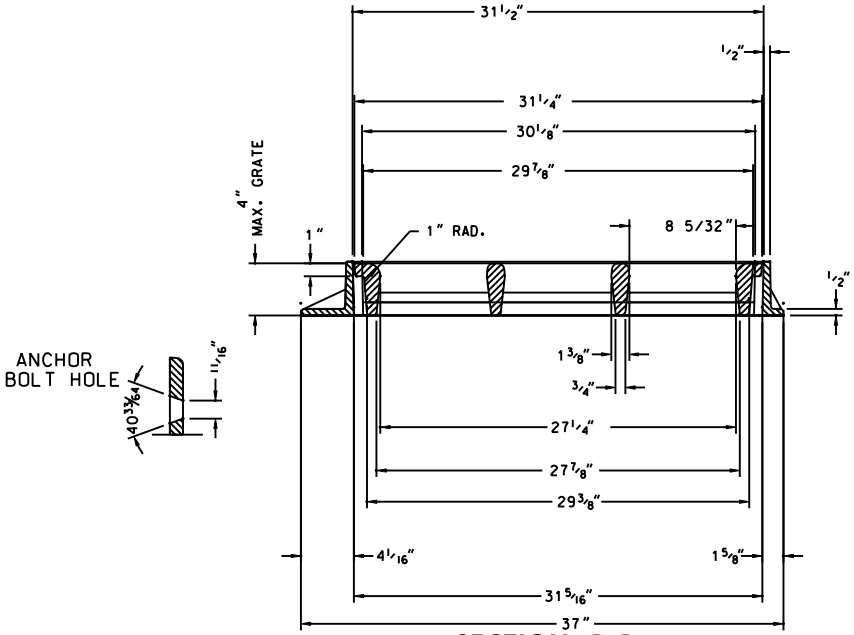

SECTION B–B

NOTE:

MATERIAL: CAST GRAY IRON ASTM A-48, CLASS 35B
FINISH: NO PAINT
WEIGHT (Min.): FRAME 163#, GRATE 295#

FRAMES TO BE CASTING WITH FLANGE CUT, AS SHOWN, WHEN INLET TO BE PLACED ADJACENT TO CURB OPENING FOR FULL FLANGE/DETAILS, REFER TO THE RESPECTIVE STANDARD PLATES FOR TYPE "S" INLET.

SPECIFICATION 305	
APPROVED	Kirk G. McCallum DIRECTOR – OFFICE OF HIGHWAY DEVELOPMENT

APPROVAL • SHA REVISIONS	APPROVAL • FEDERAL HIGHWAY ADMINISTRATION
APPROVAL 2-10-04	APPROVAL 3-31-04
REVISED	REVISED
REVISED	REVISED
REVISED	REVISED

Maryland Department of Transportation
STATE HIGHWAY ADMINISTRATION

STANDARDS FOR HIGHWAYS AND INCIDENTAL STRUCTURES

ALTERNATE SINGLE TYPE "S" INLET FRAME WITH CURVED VANE GRATES (S–CV)

STANDARD NO. MD 379.02–01