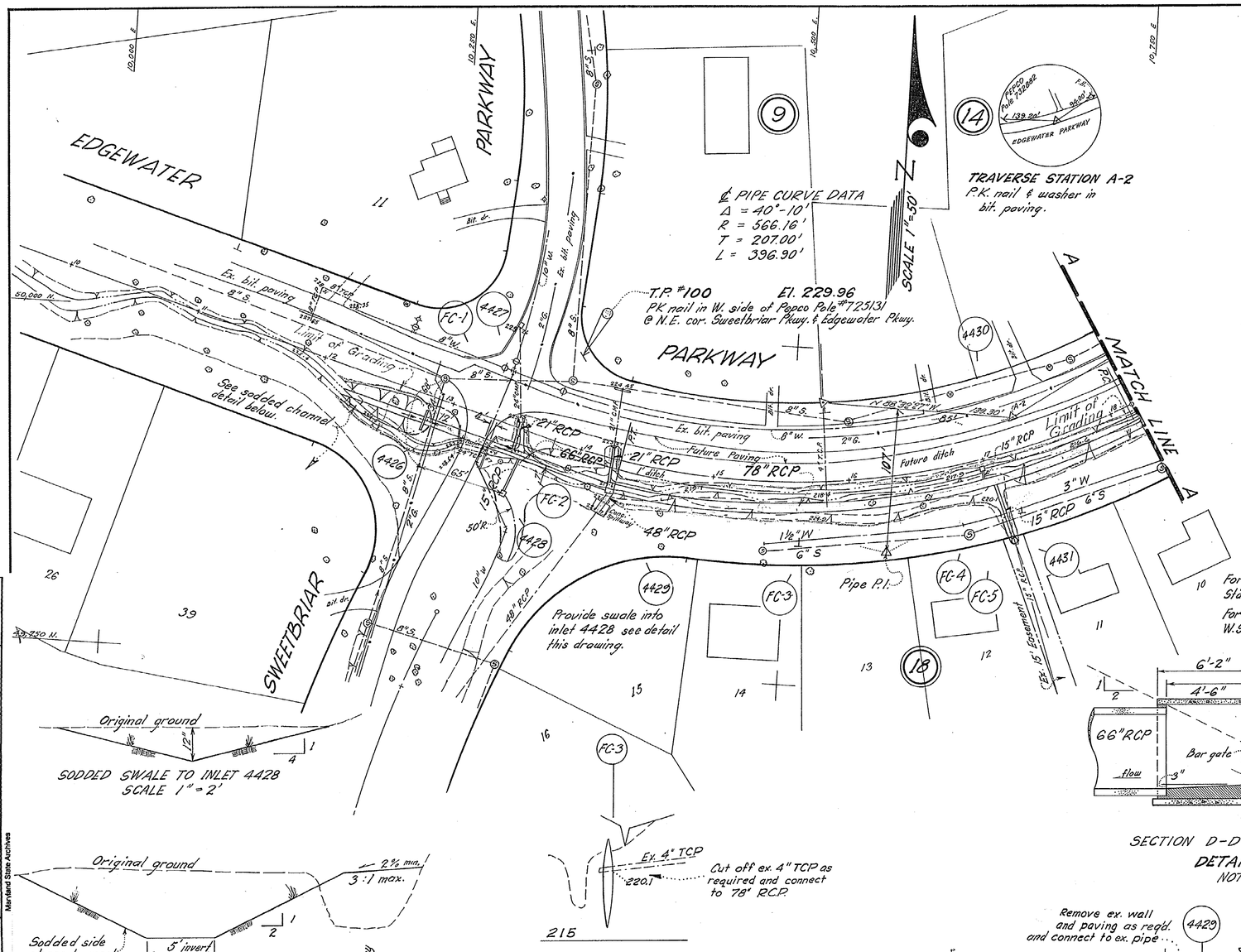

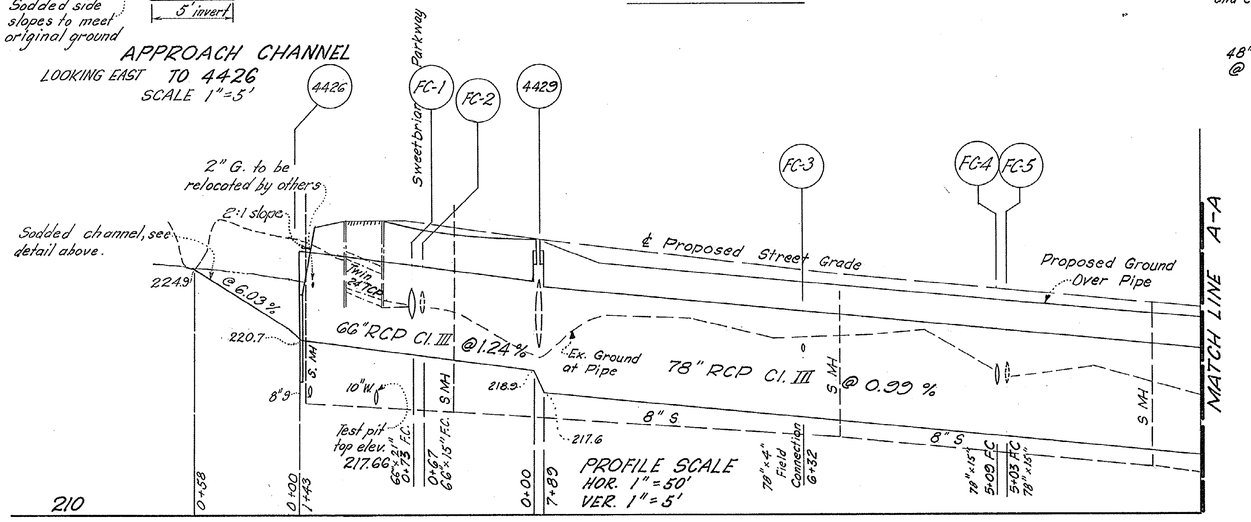

STRUCTURE SCHEDULE			
No.	Type	Top elev.	Remarks
4426	Cut-off Wall		
4427	"B" Manhole	228.0	48" ⌀
4428	" "	227.6	" " Opening S.E. side
4429	" "	226.9	5'-0" × 7'-6"
4430	"D" Inlet	221.6	Opening W. side
4431	"A" Manhole	226.9	48" ⌀
4432	"D" Inlet	217.7	Opening E. & W. sides
4433	"B" Manhole	219.0	5'-0" × 8'-0"
4434	SRC "J" Inlet	209.3 *	with grating
4435	" "	211.3 *	" "
4436	"B" Manhole	212.6	4'-0" × 8'-0"
4437	"D" Inlet	205.2	Opening E. side.
4438	Endwall for 36" RCP		
4439	Md. SRC B-78" Headwall, see details drwg. 3.		
FC-1	66"×21"	Field Connection	
FC-2	66"×15"	"	"
FC-3	78"×4"	"	"
FC-4	78"×15"	"	"
FC-5	78"×15"	"	"
FC-6	78"×24"	"	"
FC-7	84"×15"	"	"
FC-8	78"×15"	"	"
FC-9	78"×15"	"	"

* Invert of inlet notch.

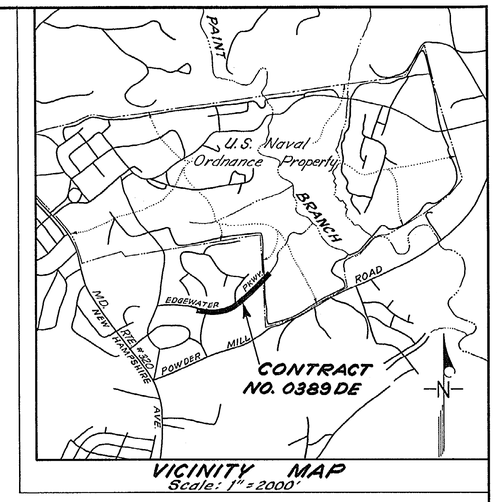

For details of bar gate and hanging see W.S.S.C. Std. Detail 60746-L.

For details of entrance structure not shown see W.S.S.C. Std. Detail 60744-L.

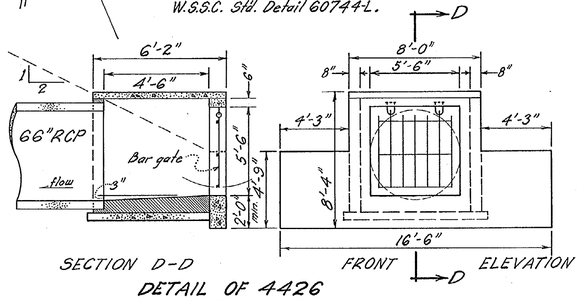

GENERAL NOTES

1. All elevations shown are invert elevations, unless otherwise noted.
2. Information concerning underground utilities was obtained from available records, but the contractor must determine the exact location and elevation of mains by digging test pits by hand at all utility crossings well in advance of trenching.
3. All adjustments or repair to utilities damaged as the result of contractor's negligence or method of operation must be made at his expense.
4. Grade all disturbed areas to provide positive drainage.
5. Provide a minimum of one (1) foot of cover on all pipes.
6. Maximum length of pipes used on curves shall be 8', unless otherwise noted.
7. All conflicting utilities will be relocated by others.
8. Tops of structures shall be adjusted to meet existing field conditions.
9. Sod all graded areas on which the slope is 3:1 or greater. All other graded areas shall be seeded and mulched unless otherwise specified or directed.

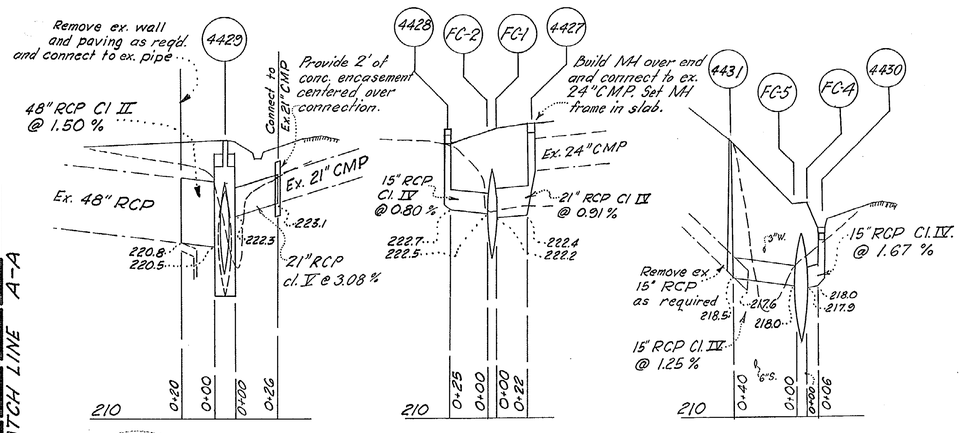

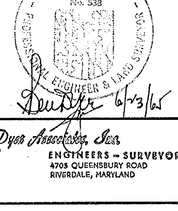

6/3/65

6/29/65	Revision to structure 4426
DATE	DESCRIPTION
REVISIONS	
CONTRACT NO.	0389 DE

DRAWN		WASHINGTON SUBURBAN SANITARY COMMISSION	APPROVED July 2, 1965 (DATE) Floyd Brackin (DEP. CHIEF ENGINEER)	STORM DRAINAGE	SUPERVISION FOR MAIN LINES ONLY NOT REQUIRED BY DEPT. OF STATE FORESTS & PARKS BALTIMORE, MD.	EXAMINED FOR	Ben Dyer Associates, Inc. 779-8500 ENGINEERS – SURVEYORS 4703 QUEENSBURY ROAD RIVERDALE, MARYLAND
DESIGN	H.C.B.			AUTHOR		WATER – SEWER	
CHECKED				MAY 14, 1964		R/W REQ'D	
EXAMINED				JOB NO.		OTHER UTILITIES	
STARTED	JAN '65			64 DE 2837			

CONTRACT NO. 0389 DE

SITKA DISTRICT, MONTGOMERY COUNTY, MARYLAND

STORM DRAINAGE

EDGEWATER PARKWAY
HILLANDALE

DRAWING NO. 1 OF 3

213 NE 2
65158
Y
25 NE 3-152
26 NE 3-5

D-65004

CE 487-267-1

SD FILE NO. 268

STATE OF MARYLAND BEN DYER No. 638 PROFESSIONAL ENGINEER & LAND SURVEYOR — Ben Dyer 6/23/65

DATE	DESCRIPTION
	REVISIONS

CONTRACT NO. 0389 DE

DRAWN	
DESIGN	H.C.B.
CHECKED	
EXAMINED	
STARTED	JAN.-65

WASHINGTON SUBURBAN SANITARY COMMISSION

APPROVED July 2, 1965 (DATE)
Alfred [signature] DEP. CHIEF ENGINEER

STORM DRAINAGE
AUTHOR
MAY 14, 1964
JOB NO.
64 DE 2837

SUPERVISION FOR MAIN LINES ONLY NOT REQUIRED BY DEPT. OF STATE FORESTS & PARKS BALTIMORE, MD.

EXAMINED FOR	
WATER – SEWER	
R/W REQ'D	
OTHER UTILITIES	

Ben Dyer Associates, Inc. 779-8500 ENGINEERS – SURVEYORS 4705 QUEENSBURY ROAD RIVERDALE, MARYLAND

CONTRACT NO. 0389 DE

SITKA DISTRICT STORM DRAINAGE
EDGEWATER PARKWAY HILLANDALE

DRAWING NO. 2 OF 3

213 NE 2
65159
Y
NE 4-4
5004

CE487-267-2

SD FILE NO. 268

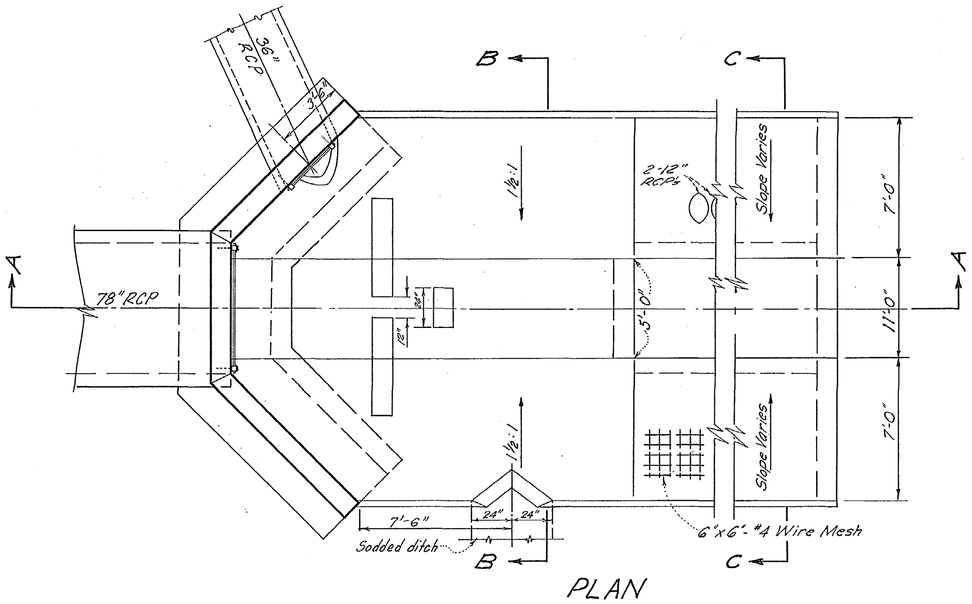

PLAN

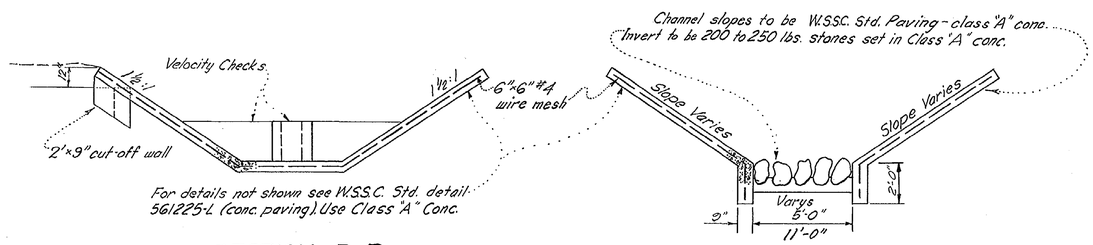

SECTION B-B

SECTION C-C

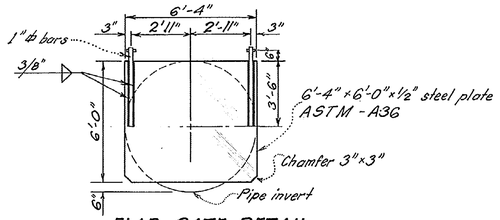

FLAP GATE DETAIL FOR 78" RCP

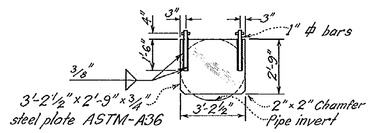

FLAP GATE DETAIL FOR 36" RCP

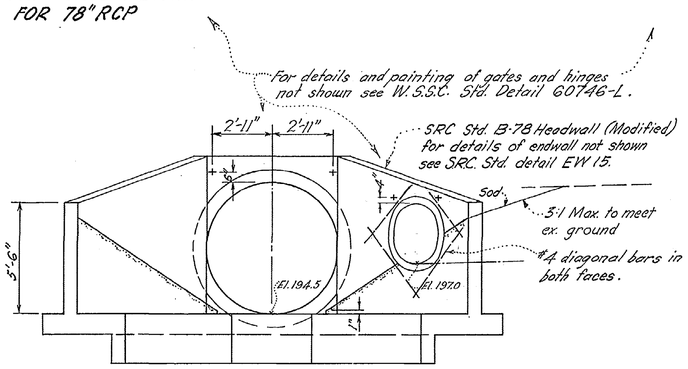

SRC B-78
Wall Modified as follows
J = 2'-5"
K = 5'-0"
G = 10'-0½"
F = 5'-6"

FRONT ELEVATION

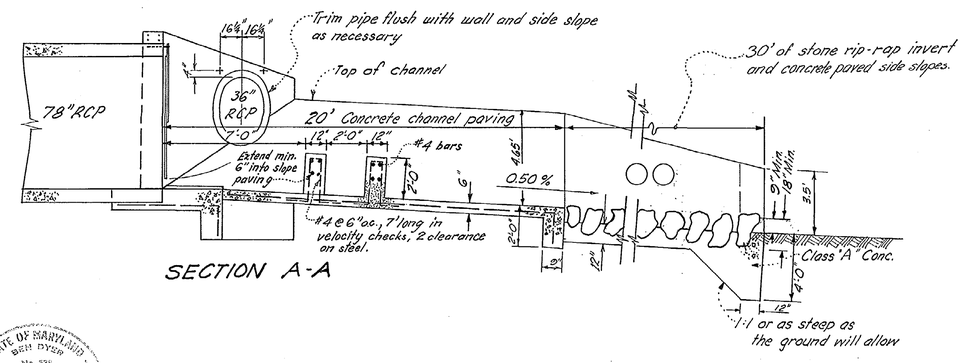

SECTION A-A

DETAILS OF ENDWALL 4439
AND OUTFALL PAVING
SCALE ¼"=1'-0"

STATE OF MARYLAND — BEN DYER — No. 826 — PROFESSIONAL ENGINEER & LAND SURVEYOR

6/29/65

DRAWN	
TRACED	
CHECKED	
EXAMINED	
STARTED	

WASHINGTON SUBURBAN SANITARY COMMISSION

APPROVED July 2, 1965 (DATE)
DEP. CHIEF ENGINEER

STORM DRAINAGE
AUTHOR
MAY 14, 1965
JOB NO.
64 DE 2837

SUPERVISION FOR MAIN LINES ONLY BY DEPT. OF STATE FORESTS & PARKS BALTIMORE, MD.

EXAMINED FOR		
WATER-SEWER		
R/W REQ'D		
OTHER UTILITIES		

Ben Dyer Associates, Inc.
779-0500
ENGINEERS - SURVEYORS
4705 QUEENSBURY ROAD
RIVERDALE, MARYLAND

CONTRACT NO. 0389 DE

SITKA DISTRICT
STORM DRAINAGE
EDGEWATER PARKWAY
HILLANDALE

DRAWING NO. 3 OF 3 — 65160 Y

DATE	DESCRIPTION
	REVISIONS
	CONTRACT NO. 0389 DE

CE 487-267-3

SD FILE NO. 268

D 65004

Maryland State Archives