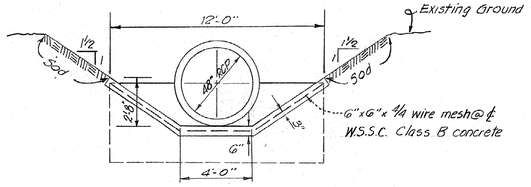

PAVED ENTRANCE @ Nº 5
Scale ¼"=1'-0"

Remainder of ditch to Nº 5 to be same cross-sectional dimensions as shown above with sodded side slopes.

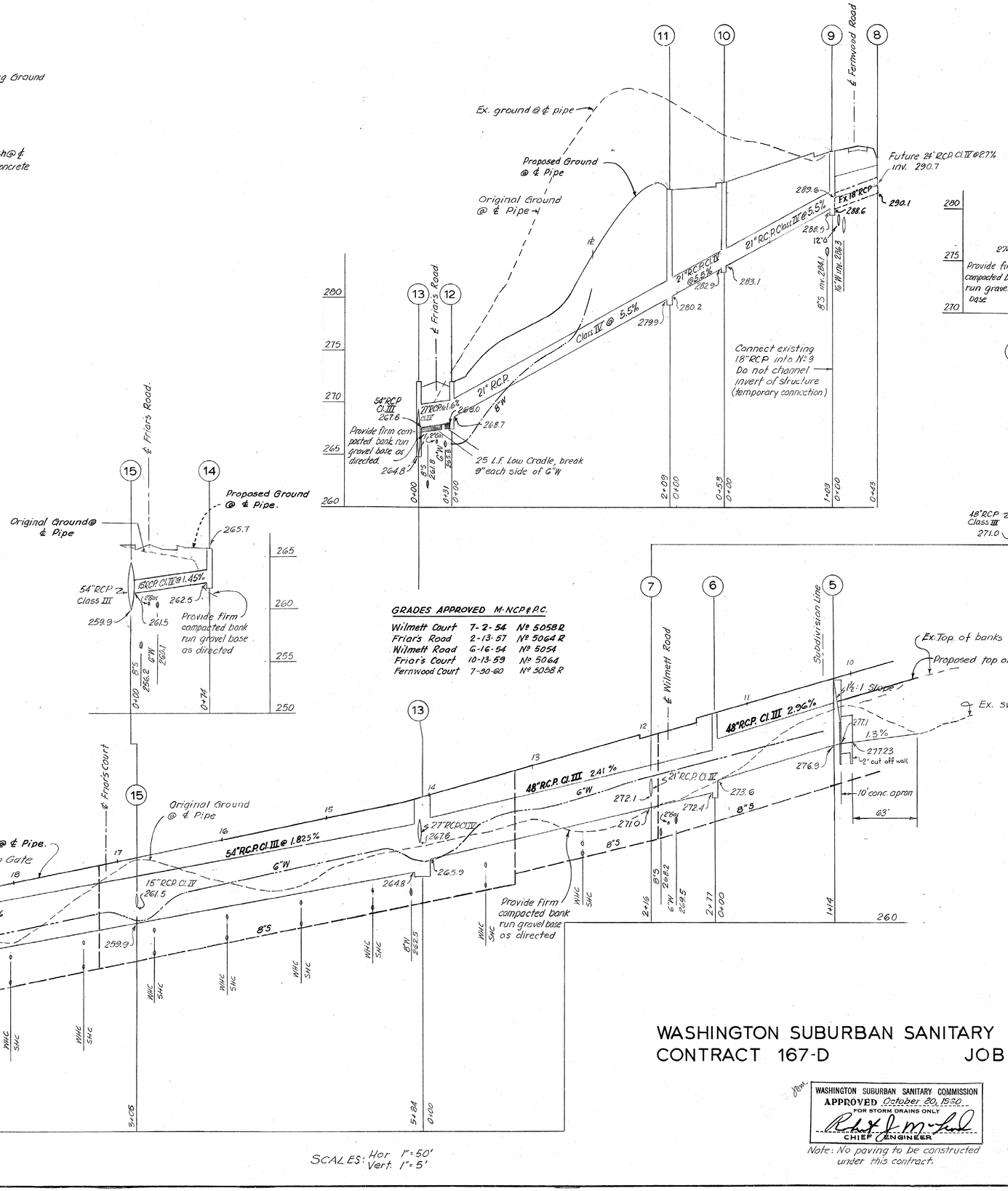

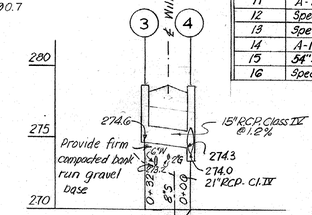

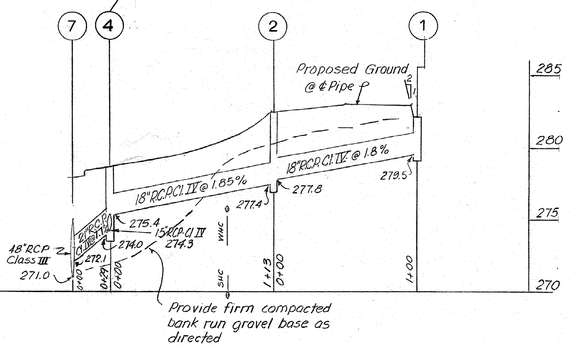

Provide firm compacted bank run gravel base as directed

GRADES APPROVED M-NCP&PC.

Wilmett Court	7-2-54	Nº 5058R
Friars Road	2-13-57	Nº 5064R
Wilmett Road	6-16-54	Nº 5054
Friars Court	10-13-59	Nº 5064
Fernwood Court	7-30-60	Nº 5058R

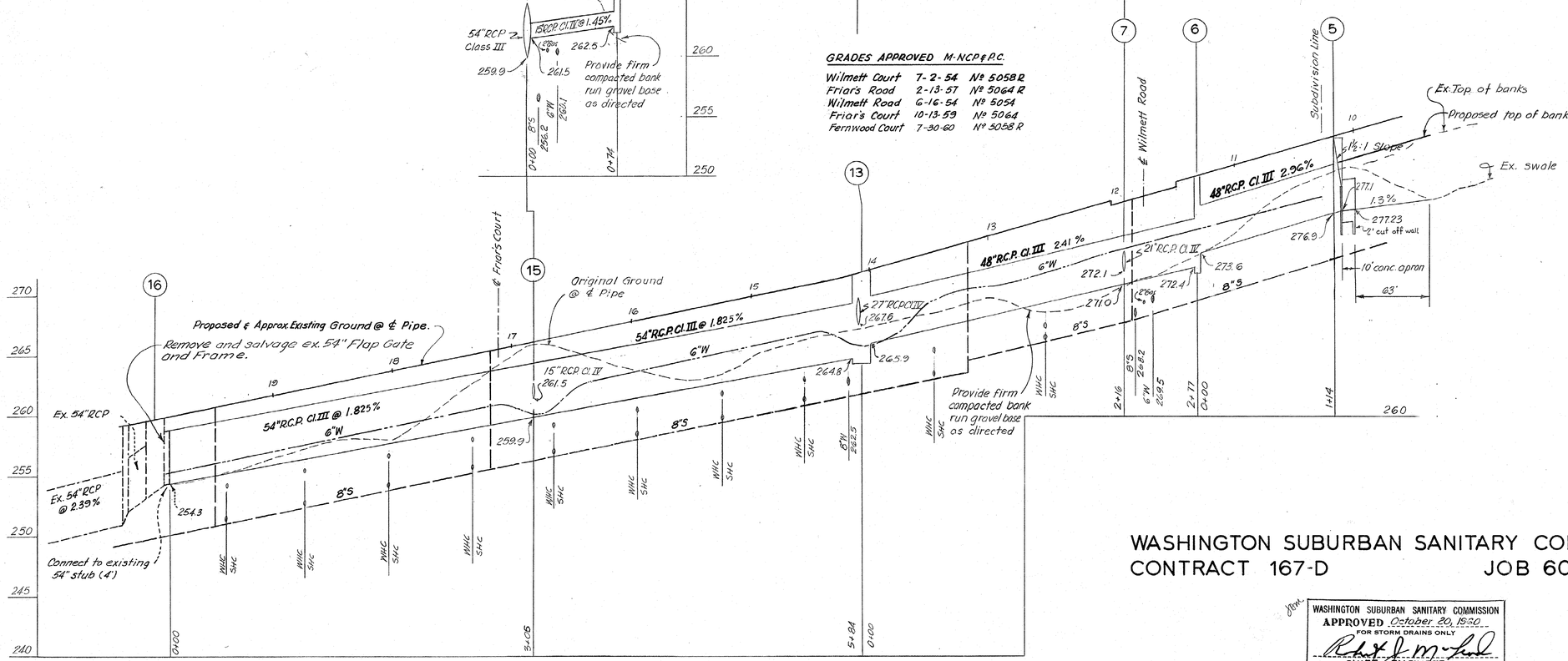

SCALES: Hor. 1"=50'
Vert. 1"=5'

SCHEDULE

STRUCTURES

No.	Type	Elevation		Remarks
1	"D"	282.1	℄	All sides open
2	B-MH	282.5	℄	48"□
3	B-1	276.8W	276.9E	
4	A-2	276.8W	276.9E	
5	Spec.	283.1	℄	See details Sheet 3 of 3
6	Mod. A-2	279.9S	280.1N	See details Sheet 3 of 3
7	48"×21" field connection.			
9	B-MH	294.1	℄	48"□
10	A-MH	291.1	℄	48"Ø
11	A-1	290.6	290.6	
12	Spec.	271.7S	272.4N	See details Sheet 3 of 3
13	Spec.	271.7S	272.2N	See details Sheet 3 of 3
14	A-1	266.7W	266.7E	
15	54"×15" field connection.			
16	Spec.	Existing 15' Rectangular		

PIPES

Dia.	Line	Length	Type	Class
18"	1-2	96	RCP.	IV
18"	2-4	109	RCP.	IV
15"	3-4	26	RCP.	IV
21"	4-7	24	RCP.	IV
48"	5-6	112	RCP.	III
48"	6-13	267	RCP.	III
21"	9-10	99	RCP.	IV
21"	10-11	49	RCP.	IV
21"	11-12	205	RCP.	IV
27"	12-13	26	RCP.	IV
54	13-16	576	RCP.	III
15"	14-15	69	RCP.	IV

TOTAL PIPE LENGTHS

Dia.	Length	Type	Class
15"	95'	RCP.	IV
18"	96'	RCP.	IV
18"	109'	RCP.	IV
21"	377'	RCP.	IV
27"	26'	RCP.	IV
48"	379'	RCP.	III
54"	576'	RCP.	III

GENERAL NOTES

1. All storm drains shall be constructed in accordance with the General Specifications of the Washington Suburban Sanitary Commission, adopted Sept. 30, 1954.
2. Types of structures refer to the Washington Suburban Sanitary Commission's Standard Storm Drainage Details unless otherwise noted.
3. Information concerning underground utilities was obtained from available records, but the Contractor must determine the exact location and elevation of the mains by digging test pits by hand at all utility crossings well in advance of trenching.
4. Maximum length of pipes to be laid on curves to be 4'.
5. Bench Marks:
   B.M.1. R.R. Spike C&P "M 3021 int. Westland & Friars Rd. El. 260.54.
   B.M.2. R.R. Spike root 14" Gum Lot 23 Blk B El. 281.74
   B.M.3. R.R. Spike 12" twin poplar Lot 3 Blk 5 EL. 325.02

WASHINGTON SUBURBAN SANITARY COMMISSION
CONTRACT 167-D JOB 60 DW 4306

WASHINGTON SUBURBAN SANITARY COMMISSION
APPROVED October 20, 1960
FOR STORM DRAINS ONLY
CHIEF ENGINEER

Note: No paving to be constructed under this contract.

DRAINAGE PLAN
GREEN TREE MANOR
MONTGOMERY COUNTY, MARYLAND

SCALE: AS SHOWN DATE: May 1960

WAYNE C. GREATHOUSE & ASSOCIATES
ENGINEERS & LAND SURVEYORS
2311 UNIVERSITY BOULEVARD, WEST
WHEATON, MARYLAND
LOckwood 5-2367

DESIGNED	DRAWN	JOB NO.	
K. Alex Outer	J.W.T.	297-A-1	601551-Y

RELEASED 10-20-60

CE 487-171 -1

SD FILE NO. 172

FP-220-D Sht. 2 of 3

FERNWOOD ROAD

FERNWOOD COURT

FRIAR'S COURT

FRIAR'S ROAD

WILMETT ROAD

WILMETT COURT

KIRKDALE ROAD

Ex. 18" RCP

Ex. Paving

8'-5" 16' W

Ex. Swale

Top of banks

The storm drain Contractor shall excavate and direct the natural flow of water to No. 5 as shown.

C. Mont. Co. Std. Post Barricades 5' c/c

10+21.00 10+18.69 END PAVING

10+26.79

10+68.18

10+42.31

11+18.18

11+26.81

2'G.

6" W.S.

2% Slope

5' R/W

40' R/W

12' Path

30' Path

Construction Strip

21" RCP Class III

42" RCP Class III

54" RCP Class III

48" RCP Class III

18" RCP Class III

15" RCP Class III

CURVE DATA
48" ø Pipe ESSO.16
L = 246.03
L' = 246.85
T = 124.85

CURVE DATA
54" ø Pipe: 171.42'
Δ = 20° 16'
T = 33.68'
L = 66.52'
PC

Connect to Exist. 54" Stub (4')

Remove and salvage ex. 54" Flap Gate and Frame.

Exist. House

Exist. Paving

Meet Exist. Paving

Pole to be adjusted by others as required to clear storm drain

Proposed House

12' drainage easement 5' const. strip each side

Lots 22 & 23 to be site graded by owner to provide positive drainage to No. 1 or to street paving.

Limit of Paving 44+74.59

Permit No. 60-114

Spill Gutter

BM-1

BM-2

BM-3

F.F. 284.0 Proposed

F.F. 277.6 Proposed

F.F. 275.0 Proposed

F.F. 284.0 Proposed

WASHINGTON SUBURBAN SANITARY COMMISSION
CONTRACT 167-D JOB 60 DW 4306

EXAMINED FOR

WATER & SEWERS	[illegible]	10/11/60
R/W---REQ'D.	[illegible]	10/11/60
OTHER UTILITIES	[illegible]	10/11/60

WASHINGTON SUBURBAN SANITARY COMMISSION
APPROVED October 20, 1960
FOR STORM DRAINS ONLY
Robert J. McLeod
CHIEF ENGINEER

Note: No paving to be constructed under this contract

DRAINAGE PLAN
GREEN TREE MANOR
MONTGOMERY COUNTY, MARYLAND

SCALE: 1" = 50' DATE: MAY 1960

WAYNE C. GREATHOUSE & ASSOCIATES
ENGINEERS & LAND SURVEYORS
2311 UNIVERSITY BOULEVARD, WEST
WHEATON, MARYLAND
LOckwood 5-2367

DESIGNED	DRAWN	JOB NO.	
K. deOuter	J.W.T.	237.A1	601550-Y

CE 487-171-2

SD FILE NO. 177

Sht. 7 of 7 Shts.

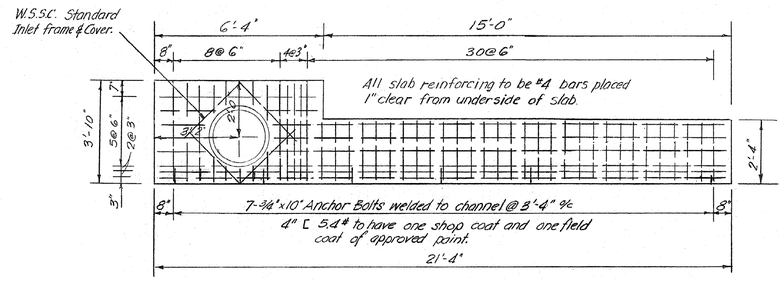

TOP SLAB
Scale 3/8"=1'-0"

For details not shown, refer to W.S.S.C. Type "F-1" Inlet.

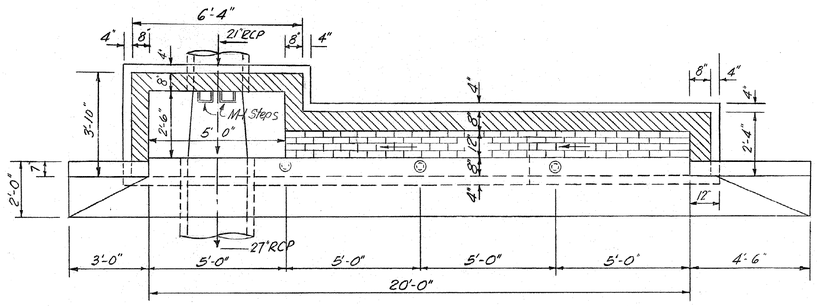

PLAN BELOW SLAB
Scale 3/8"=1'-0"

DETAILS INLET NO. 12

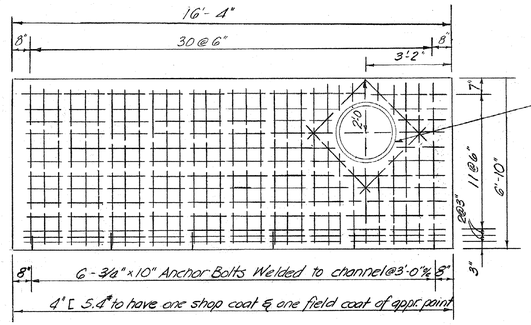

For details not shown, refer to W.S.S.C. Type "F-2" Inlet.

TOP SLAB
Scale 3/8"=1'-0"

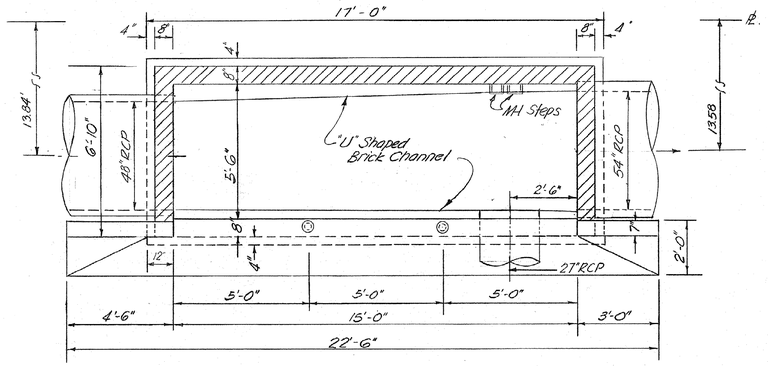

PLAN BELOW SLAB
Scale 3/8"=1'-0"

DETAILS INLET NO. 13

Std. W.S.S.C. Inlet Frame & Cover

All slab reinforcement to be #4 bars placed 1" clear from under side of slab.

For details not shown refer to W.S.S.C. Type "A-2" Inlet.

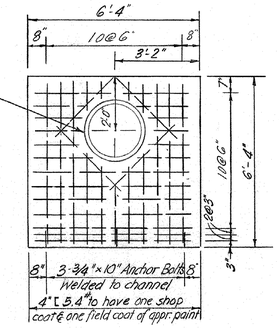

TOP SLAB

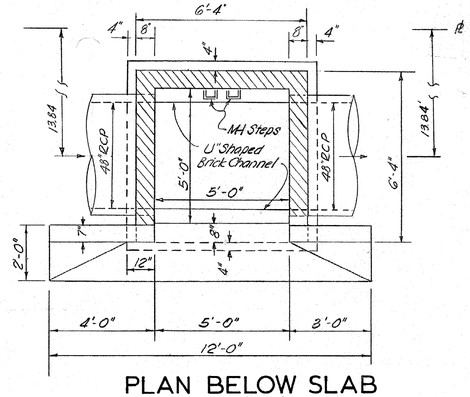

PLAN BELOW SLAB
Scale 3/8"=1'-0"

DETAILS INLET NO. 6

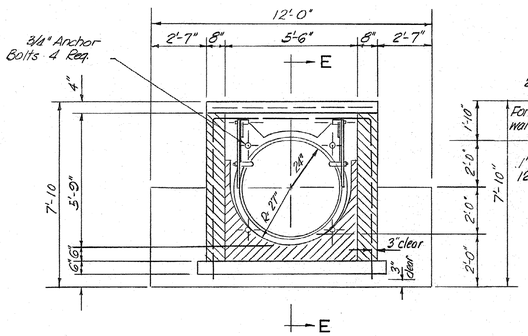

SECTION C-C

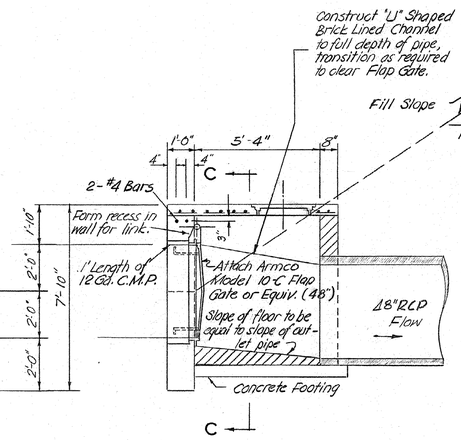

SECTION E-E

Notes: 1. Flap Gate to be furnished with Brass Studs Bushings and Nuts and Bronze Cotter Keys.
2. Parge Exposed Portion of Brick Walls.
3. All Concrete to be W.S.S.C. Class "B".

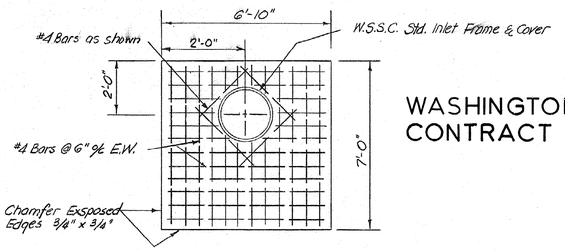

TOP SLAB

DETAILS STRUCTURE NO. 5

WASHINGTON SUBURBAN SANITARY COMMISSION
CONTRACT 167-D JOB 60 DW 4306

WASHINGTON SUBURBAN SANITARY COMMISSION
APPROVED October 20, 1960
FOR STORM DRAINS ONLY
Robert J. McLeod
CHIEF ENGINEER

DRAINAGE PLAN
GREEN TREE MANOR
MONTGOMERY COUNTY, MARYLAND

SCALE: 3/8"=1'-0" DATE:

WAYNE C. GREATHOUSE & ASSOCIATES
ENGINEERS & LAND SURVEYORS
2311 UNIVERSITY BOULEVARD, WEST
WHEATON, MARYLAND
LOckwood 5-2367

DESIGNED	DRAWN	JOB NO.	
K. DEN OUTER		297-A1	601552-Y

CE487-171 -3

SD FILE NO. 172

Sht 3 of 3

RELEASED 10-20-60