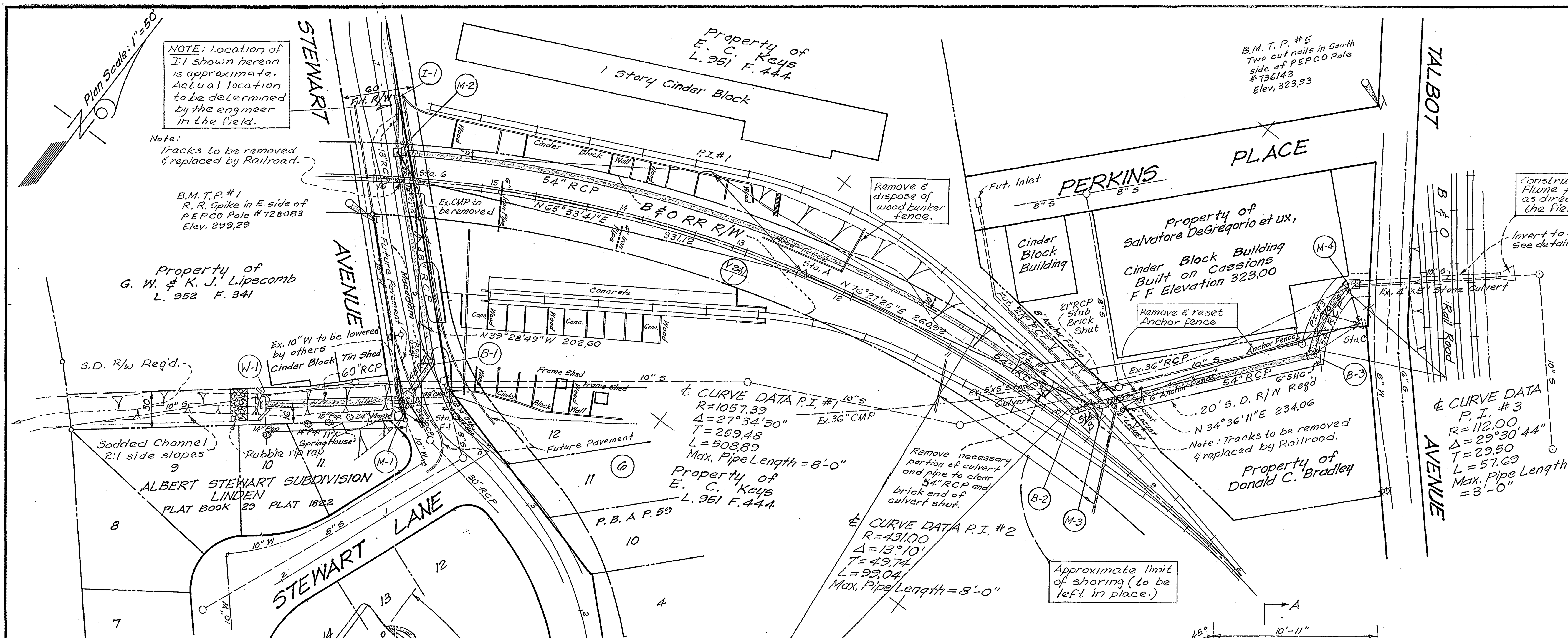

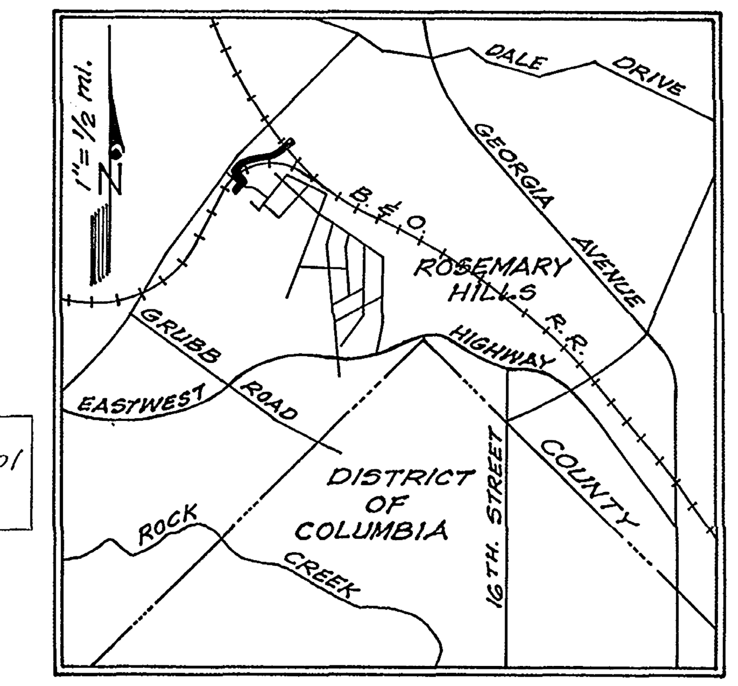

VICINITY MAP

STRUCTURE SCHEDULE			
№	TYPE	TOP ELEV.	REMARKS
I-2	J Inlet	Notch Elev. 317.70	Std. S R C Detail
M-1	Special Manhole	Top of Cover 291.32	See Detail Sheet #1
M-2	B-66 Manhole	302.90	W S S C Std.
M-3	B-66 Manhole	314.20	W S S C Std. w/ 5'-6"x0'-6" openings on N W & S E sides of structure
M-4	Special Manhole	Top of Cover 317.35	See Detail Sheet #1
I-1	J Inlet	Notch 305.00	Std. S R C Detail
B-2	54" RCP Bend Δ = 56 1/4°	—	Prefabricated
W-1	B-Endwall w/Vel. Check	290.33	Mod. S R C Std. F = 5'-0" See detail sheet #2
B-1	48" RCP Bend Δ = 45°	—	Prefabricated
B-3	54" RCP Bend Δ = 22°30'		Prefabricated

PIPE SCHEDULE		
DIAM.	TYPE	LENGTH
18"	RCP Cl. V	40'
36"	RCP Cl. IV	4'
48"	RCP Cl. V	206
54"	RCP Cl. IV	240'
54"	RCP Cl. V	632'
60"	RCP Cl. V	117'
21"	RCP Cl. V	4'

GENERAL NOTES
FOR STORM DRAIN CONSTRUCTION

1. All storm drains shall be constructed in accordance with the latest Edition of the General Specifications of Maryland State Roads Commission and Montgomery County.
2. Types of structures refer to the Standard Storm Drainage Details of the W. S. S. C., Maryland State Roads Commission and Montgomery County, unless otherwise noted.
3. Where the drop on the main line through a structure can be accomodated by an invert slope of 1½ : 1 or flatter, a rounded channel lined with sewer brick on edge shall be built to the crown of the pipes.
4. Information concerning underground utilities was obtained from available records, but the Contractor must determine the exact location and elevations of the mains by digging test pits by hand at all utility crossings, well in advance of trenching. If clearances are less than shown on this plan or six (6) inches, whichever is less, contact Washington Suburban Sanitary Commission before proceeding with construction.
5. B-1, B-2, & B-3 are to be blocked with Class "B" concrete. See buttress detail on sheet 2 of 2.

TIES TO STRUCTURES			
FROM	TO	BEARING	DIST.
F-1	W-1	S83°50'00"W	36.70
F-1	M-1	N72°30'00"W	24.00
P.O.T. 0+51	B-1	N50°31'11"E	9.00
#6	M-2	N72°04'44"W	25.52
#6	I-1	N50°40'00"W	70.00
A	P.I. #1	N80°46'15"W	113.17
B	P.I. #2	S82°26'20"W	58.67
B	B-2	S15°06'24"W	14.54
B	M-3	N61°47'52"E	13.78
C	P.I. #3	S62°19'22"E	34.79
C	M-4	N56°23'49"W	34.70
C	B-3	S14°24'43"W	46.97
B	I-2	N70°30'00"W	38.00

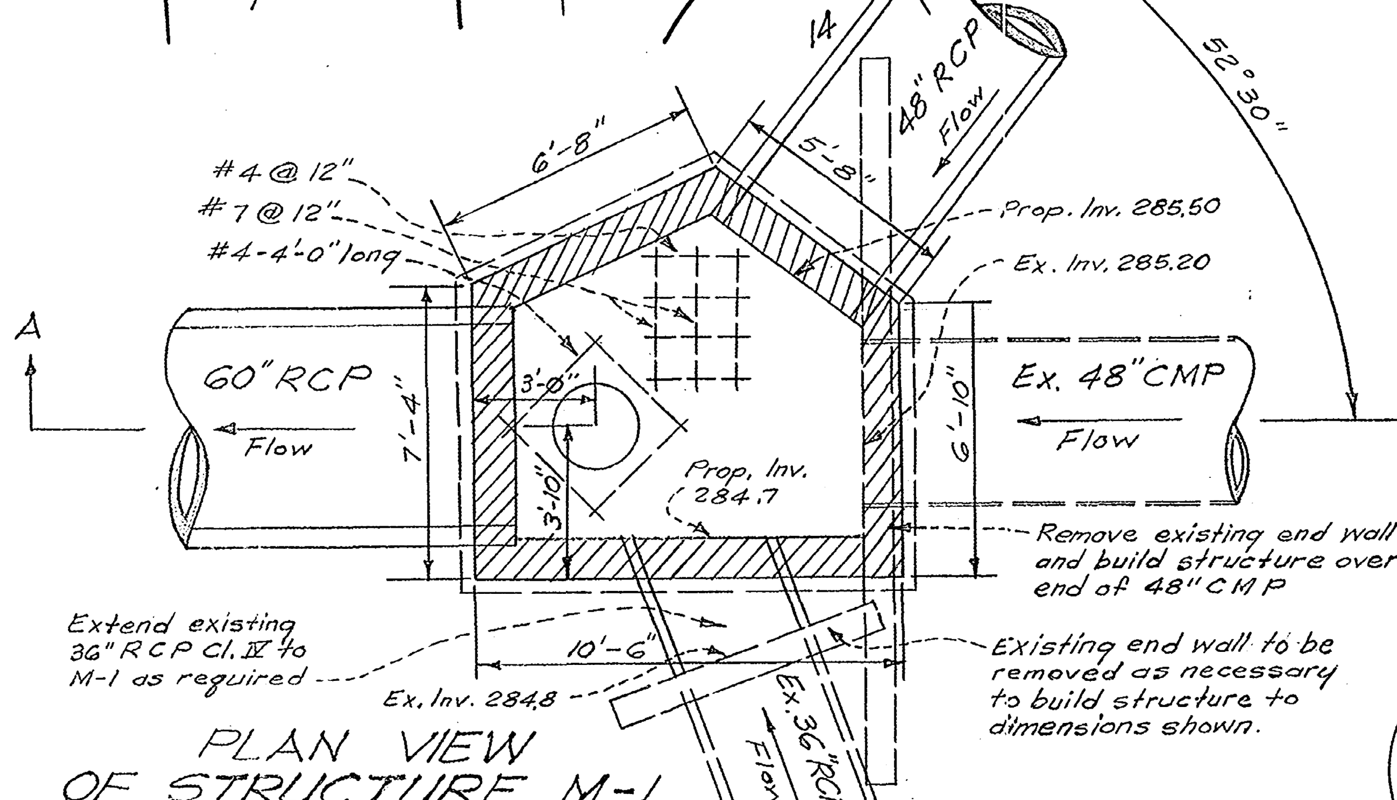

PLAN VIEW OF STRUCTURE M-1
SCALE: 1/4" = 1'-0"

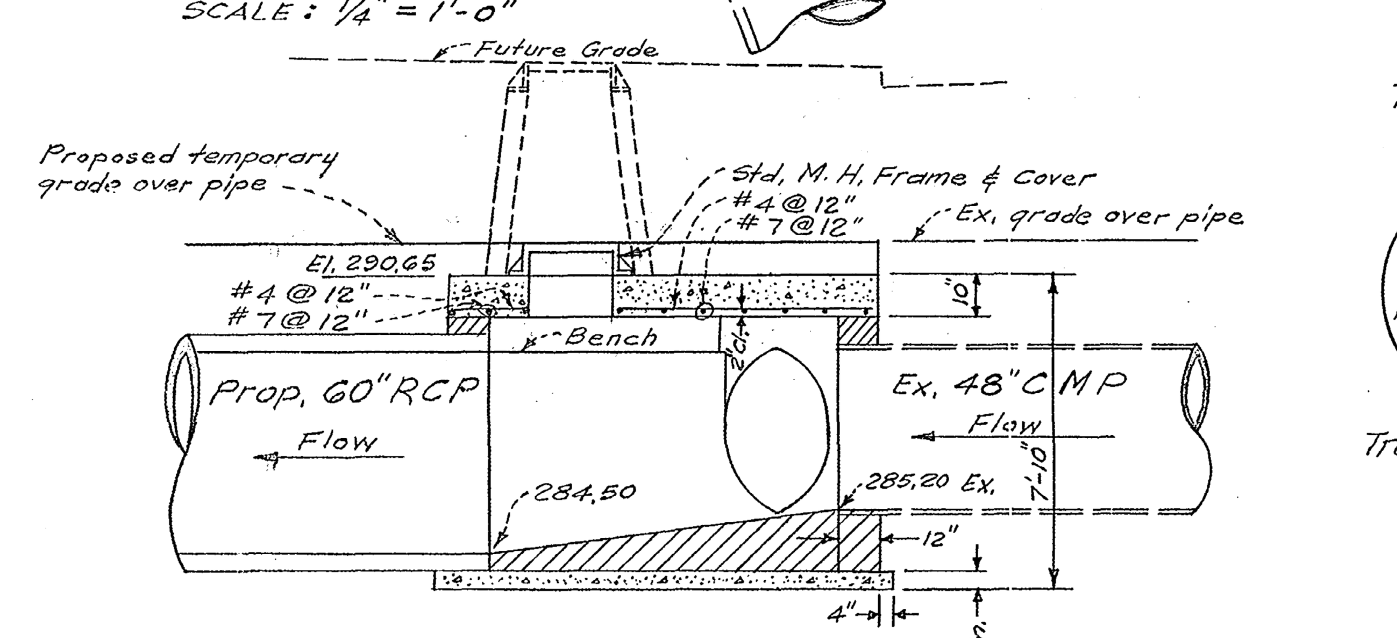

SECTION A-A
SCALE: 1/4" = 1'-0"

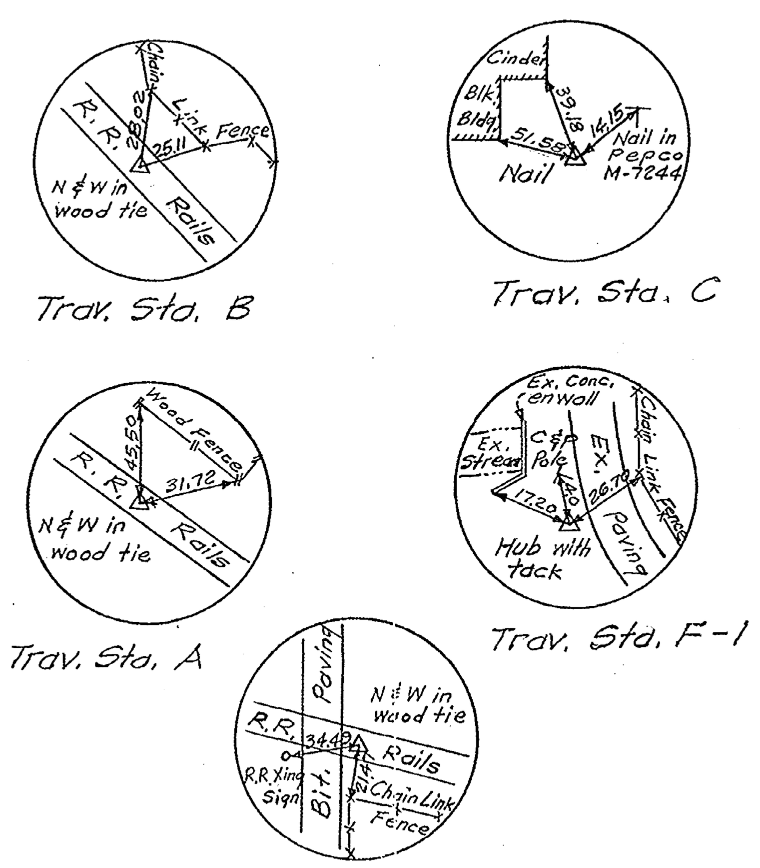

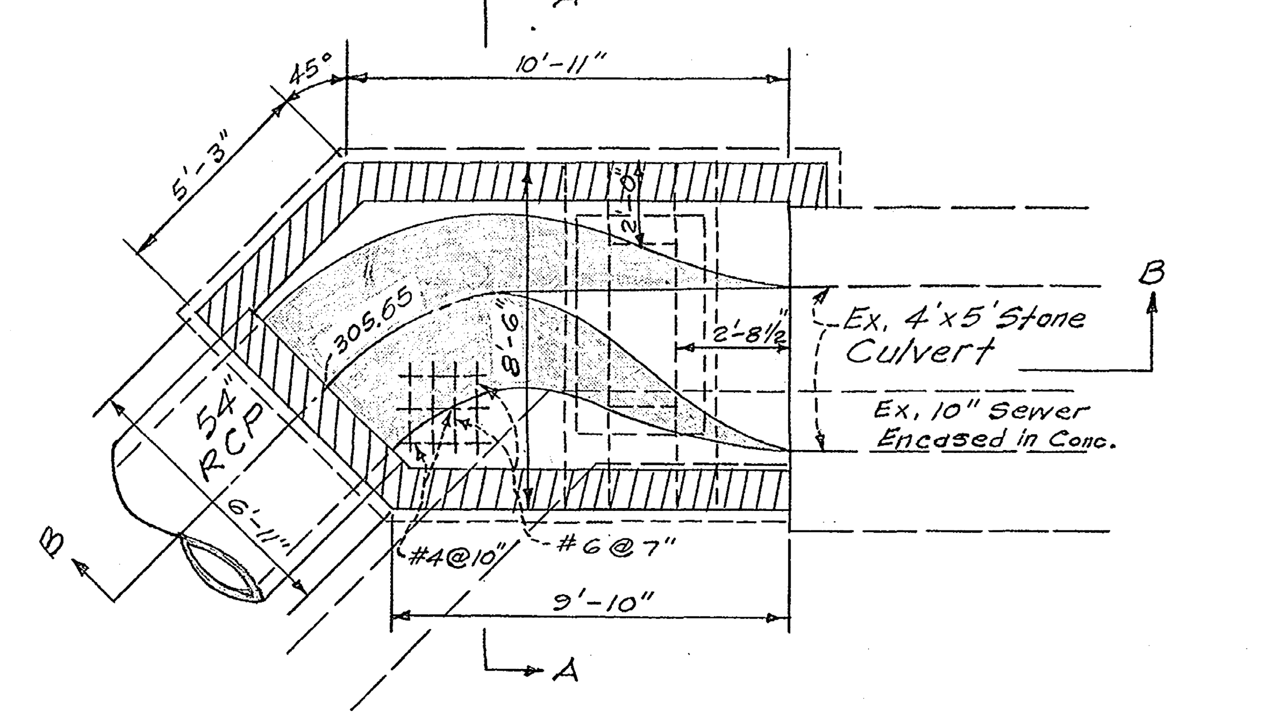

PLAN VIEW OF STRUCTURE M-4
SCALE: 1/4" = 1'-0"

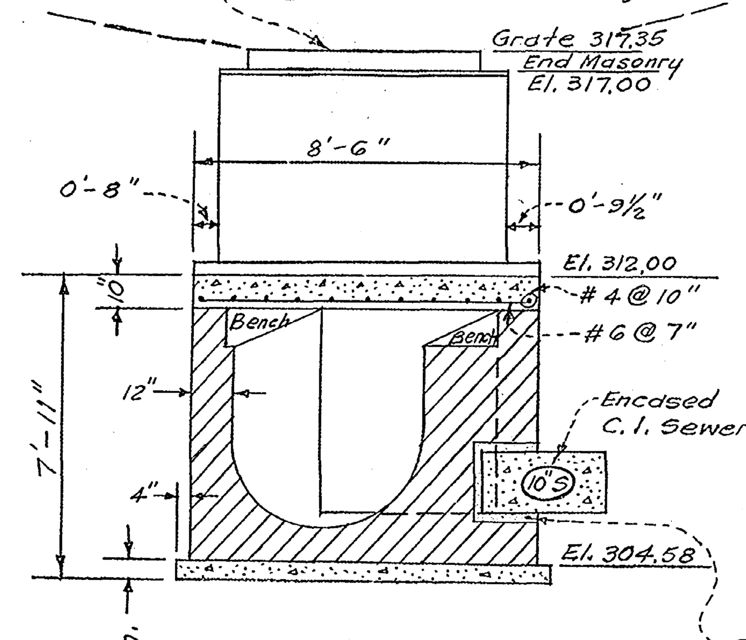

SECTION A-A
SCALE: 1/4" = 1'-0"

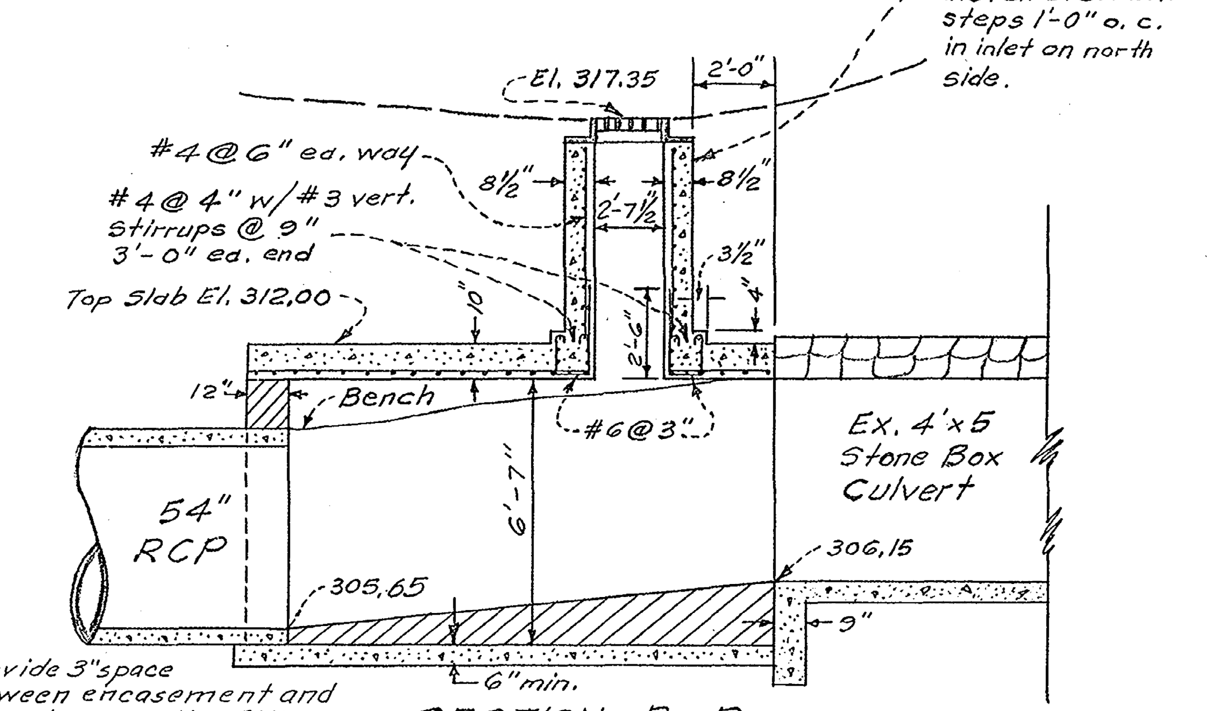

SECTION B-B
SCALE: 1/4" = 1'-0"

I certify that the storm drainage design shown on these plans conform to Storm Drain Design Criteria adopted by the Montgomery County Department of Public Works on July 1, 1968.

R. H. Kehr
R. H. KEHR P. E.
MARYLAND #5920

STATE OF MARYLAND RICHARD HOEFFNER KEHR No. 5920 REGISTERED PROFESSIONAL ENGINEER

R. H. Kehr 3/20/69

W.S.S.C. PERMIT #DM-912a FOR WORK IN PUBLIC SPACE

DATE	REVISIONS

PROJECT No. 68 SD G2 AND 68 SD P6

50'S	Y
	NO. 1
200'S	OF 3

DR.	MONTGOMERY COUNTY, MARYLAND DEPARTMENT OF PUBLIC WORKS
CK.	
EX.	APPROVED: July 2, 1969 (DATE) Richard J. [signature] (DEP. DIR. PUBLIC WORKS)

STORM DRAIN
AUTHOR
JOB NO.

SUPERVISION
FOR MAIN LINES ONLY
BY
DEPT. OF STATE FORESTS & PARKS
BALTIMORE, MD.

EXAMINED FOR		
WATER & SEWERS		
R/W REQ'D		
OTHER UTILITIES		

BEN DYER ASSOCIATES, INC.

PROJECT No.
68 SD G2
AND
68 SD P6

WHEATON DISTRICT
STORM DRAIN PLAN
TALBOT AVENUE TO STEWART AVENUE
LINDEN SUBDIVISION
MONTGOMERY COUNTY, MARYLAND

CE487-2-1

SD FILE NO 2

Marylandl State Archives

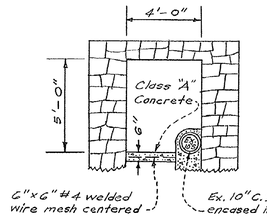

Note: Provide 9"x 2'-0" cutoff wall at upper & lower end of stone culvert.

SECTION OF BOTTOM SLAB FOR EXISTING 4'-0"x 5'-0" STONE CULVERT UNDER RAILROAD
SCALE: 1/4" = 1'-0"

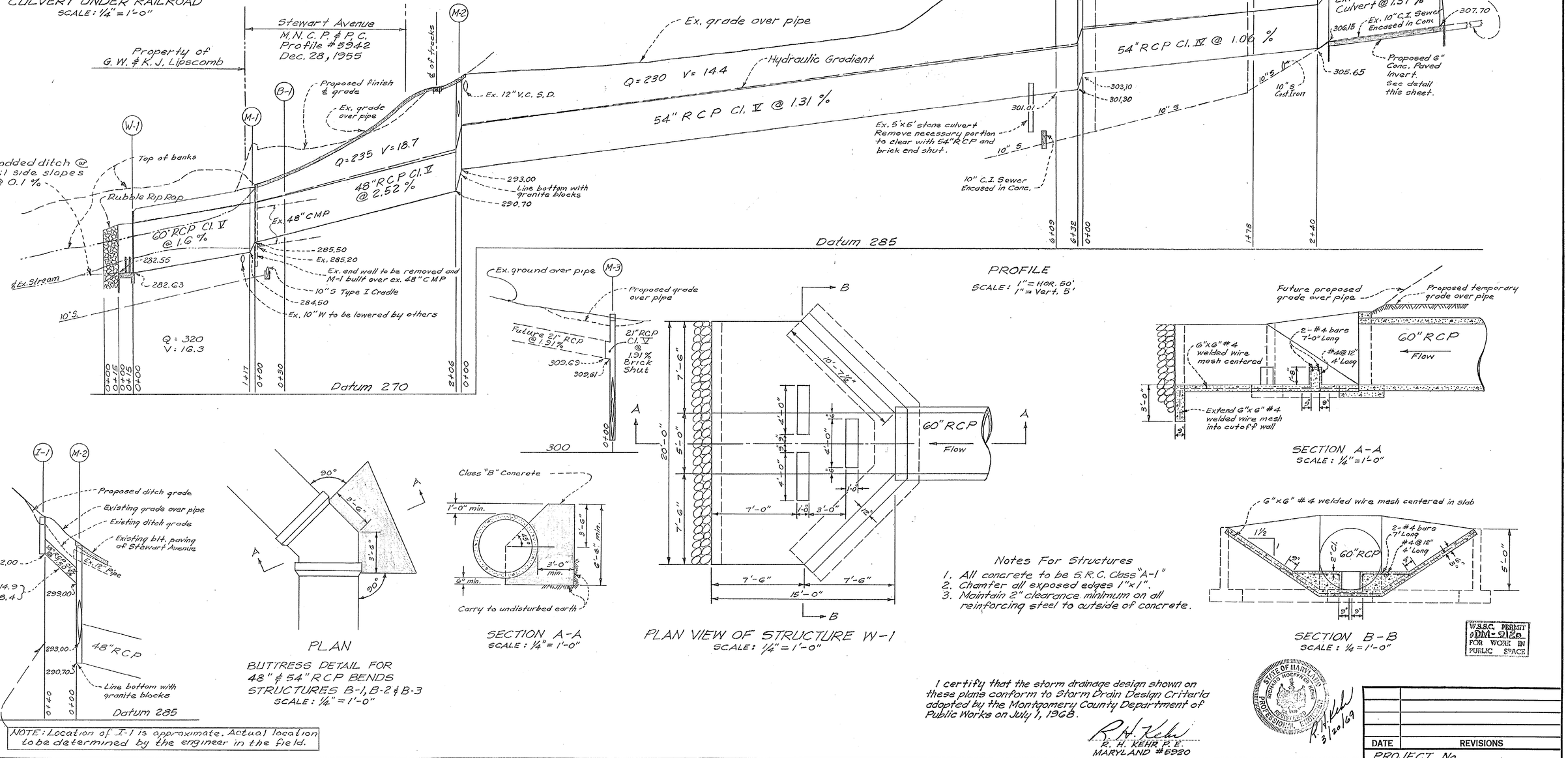

PROFILE
SCALE: 1" = HOR. 50', 1" = Vert. 5'

SECTION A-A
SCALE: 1/4" = 1'-0"

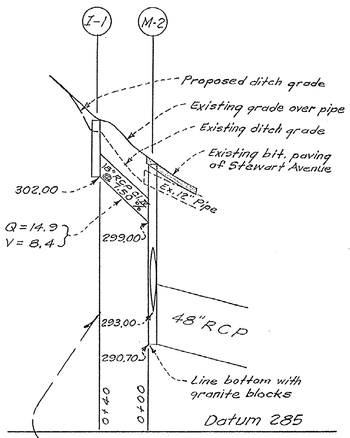

NOTE: Location of I-1 is approximate. Actual location to be determined by the engineer in the field.

PLAN

BUTTRESS DETAIL FOR 48" & 54" RCP BENDS STRUCTURES B-1, B-2 & B-3
SCALE: 1/4" = 1'-0"

SECTION A-A
SCALE: 1/4" = 1'-0"

PLAN VIEW OF STRUCTURE W-1
SCALE: 1/4" = 1'-0"

Notes For Structures
1. All concrete to be S.R.C. Class "A-1"
2. Chamfer all exposed edges 1"x1".
3. Maintain 2" clearance minimum on all reinforcing steel to outside of concrete.

SECTION B-B
SCALE: 1/4" = 1'-0"

W.S.S.C. PERMIT #DM-5128 FOR WORK IN PUBLIC SPACE

I certify that the storm drainage design shown on these plans conform to Storm Drain Design Criteria adopted by the Montgomery County Department of Public Works on July 1, 1968.

R. H. Kehr
R. H. KEHR P.E
MARYLAND #5920

STATE OF MARYLAND — RICHARD HOEFFNER KEHR — REG. NO. 5920 — PROFESSIONAL ENGINEER
R.H. Kehr 3/20/69

DATE	REVISIONS

PROJECT No. 68 SD G2 AND G8 SD P6
50'S Y
200'S No. 2 OF 3

DR.
CK.
EX.

MONTGOMERY COUNTY, MARYLAND
DEPARTMENT OF PUBLIC WORKS
APPROVED: July 2, 1969 (DATE)
Richard J. Fryer (DEP. DIR. PUBLIC WORKS)

STORM DRAIN
AUTHOR
JOB NO.

SUPERVISION
FOR MAIN LINES ONLY
BY
DEPT. OF STATE FORESTS & PARKS
BALTIMORE, MD.

EXAMINED FOR

WATER & SEWERS		
R/W REQ'D		
OTHER UTILITIES		

4205 SUGARLOAF ROAD, RIVERDALE, MARYLAND 20840
DEW DYER ASSOCIATES, INC.
SOLVENTS, PETROLEUM, PETROLEUM
TELEPHONE 779-8500

PROJECT No.
68 SD G2
AND
68 SD P6

WHEATON DISTRICT
STORM DRAIN PLAN
TALBOT AVENUE TO STEWART AVENUE
LINDEN SUBDIVISION
MONTGOMERY COUNTY, MARYLAND

SD FILE NO. 2

CE 487-2-2

Maryland State Archives

Scale 1"= 200'

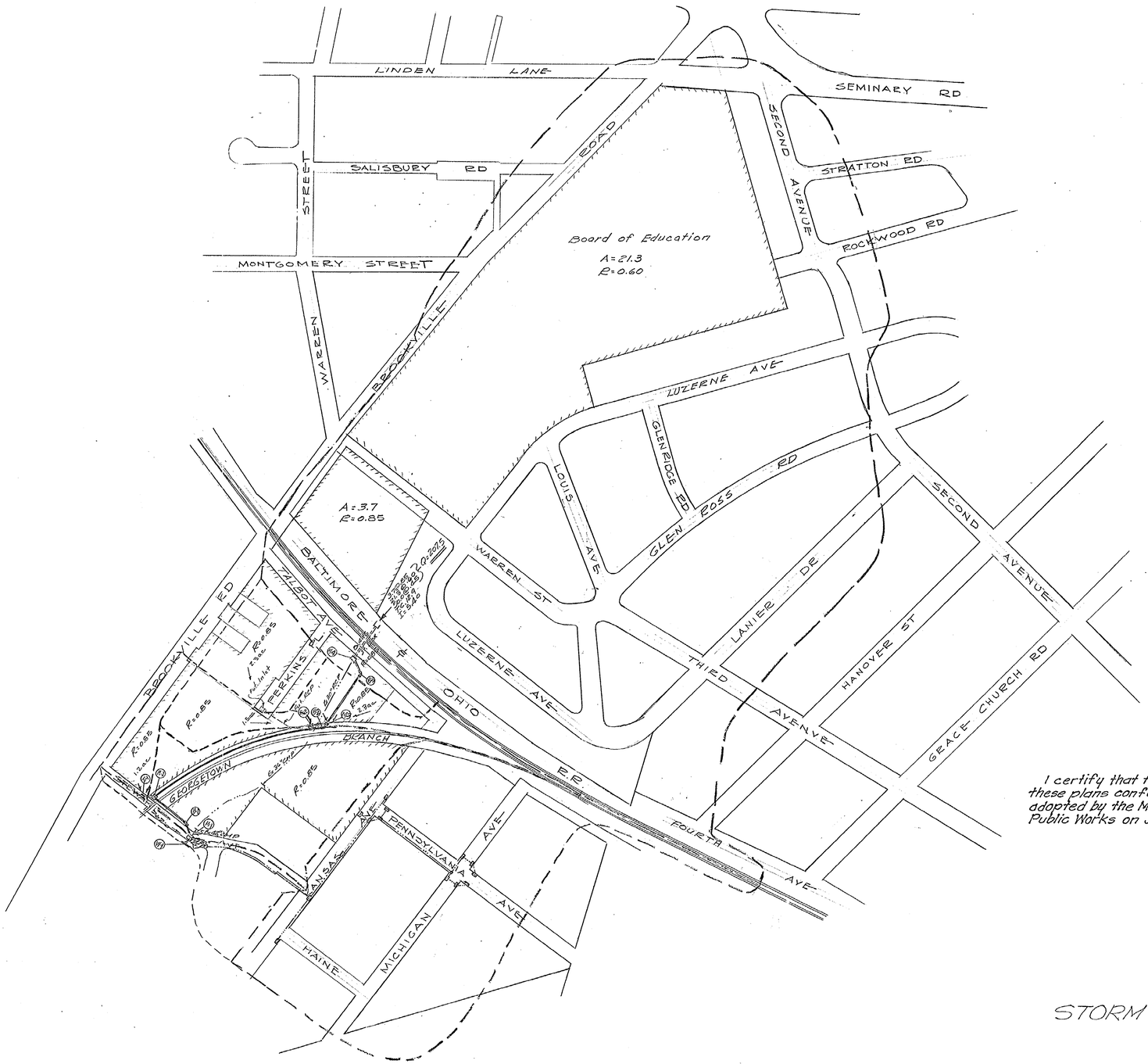

I certify that the storm drainage design shown on these plans conform to Storm Drain Design Criteria adopted by the Montgomery County Department of Public Works on July 1, 1968.

R. H. Kehr
R. H. KEHR P. E.
MARYLAND # 5920

W.S.S.C. PERMIT # DM-9120 FOR WORK IN PUBLIC SPACE

STORM DRAIN STUDY

DRAWN TRACED CHECKED EXAMINED STARTED				DEVELOPER:	'OS QUEENSBURY ROAD, RIVERDALE, MARYLAND 779-8500 BEN DYER ASSOCIATES, INC. ENGINEERS, SURVEYORS	PROJECT No. 68 SD G2 AND 68 SD PG	WHEATON DISTRICT STORM DRAIN PLAN TALBOT AVENUE TO STEWART AVENUE LINDEN SUBDIVISION MONTGOMERY COUNTY, MARYLAND	SHEET NO. 3 OF 3	SCALE AS SHOWN	

CE 487-2-3

SD FILE NO. 000002

Maryland State Archives