STORM INLET SEDIMENT TRAP ST-III

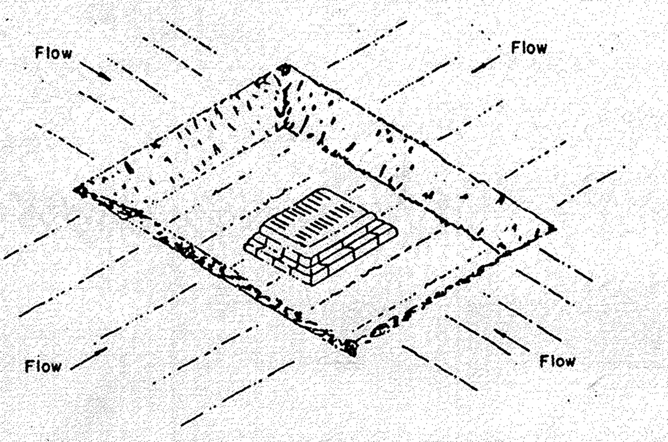

YARD DRAIN

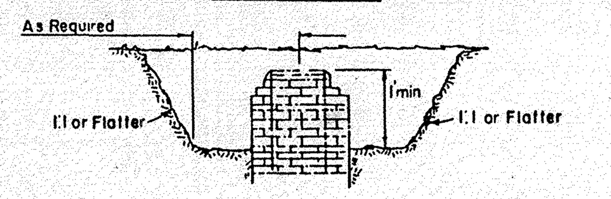

CROSS SECTION

CONSTRUCTION SPECIFICATION FOR ST-III

1. Sediment shall be removed and the trap restored to its original dimensions when the sediment has accumulated to ½ the design depth of the trap. Removed sediment shall be deposited in a suitable area and in such a manner that it will not erode.
2. The volume of sediment storage shall be 1800 cubic feet per acre of contributory drainage.
3. The structure shall be inspected after each rain and repairs made as needed.
4. Construction operations shall be carried out in such a manner that erosion and water pollution shall be minimized.
5. The sediment trap shall be removed and the area stabilized when the constructed drainage area has been properly stabilized.
6. All cut slopes shall be 1:1 or flatter.

Maximum Drainage Area: 3 Acres

U.S. DEPARTMENT OF AGRICULTURE SOIL CONSERVATION SERVICE COLLEGE PARK, MARYLAND	STORM INLET SEDIMENT TRAP	STANDARD DRAWING ST-III

SWALE INLET PROTECTION DETAIL

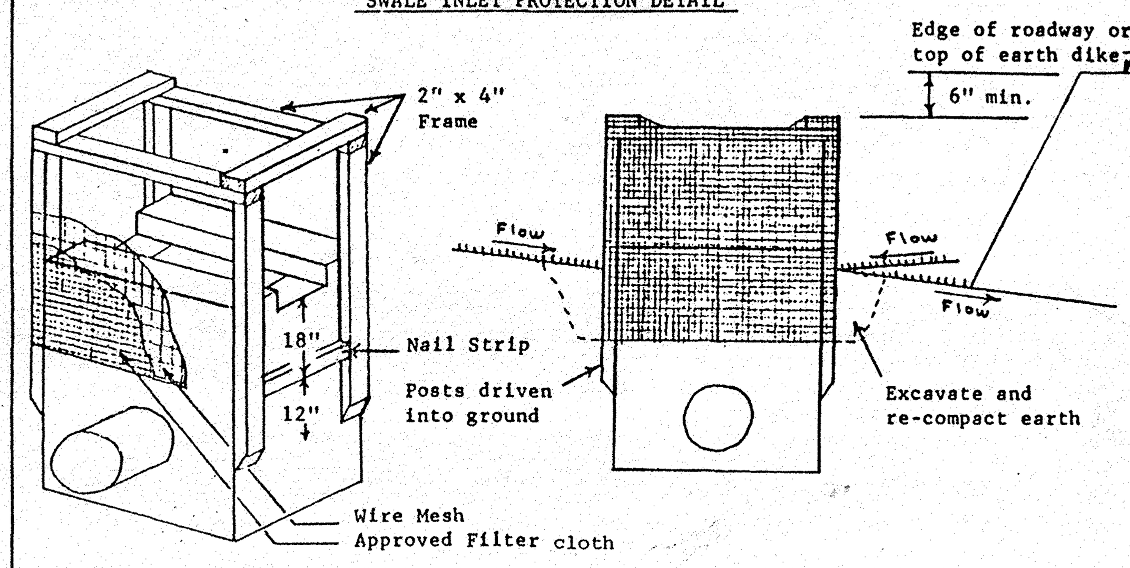

STANDARD SYMBOL

CURB INLET PROTECTION DETAIL

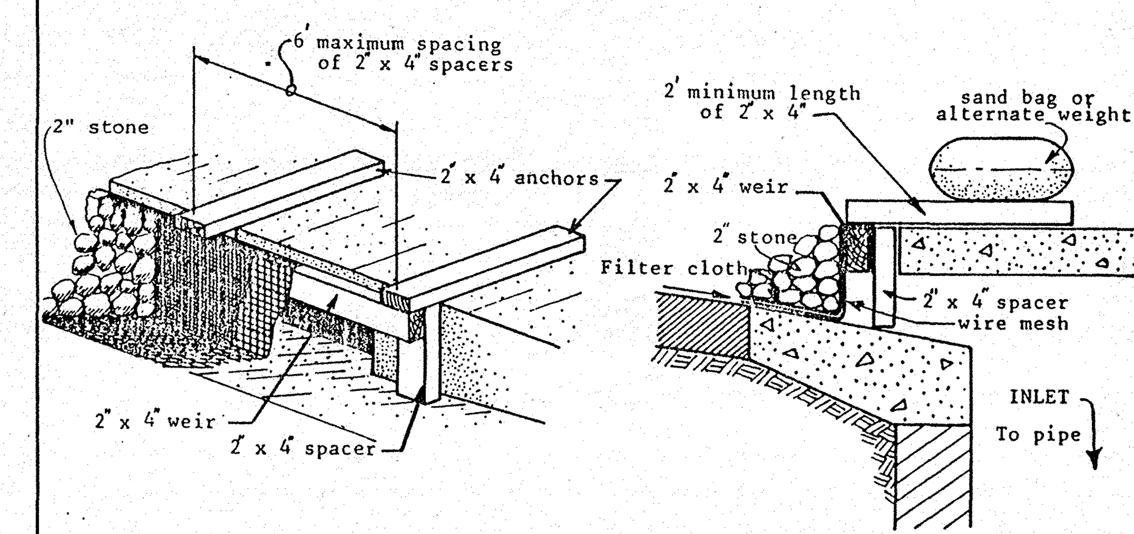

STANDARD SYMBOL

U.S. DEPARTMENT OF AGRICULTURE SOIL CONSERVATION SERVICE COLLEGE PARK, MARYLAND	INLET PROTECTION DETAIL	STANDARD DRAWING IPD—I

EARTH DIKE

not to scale

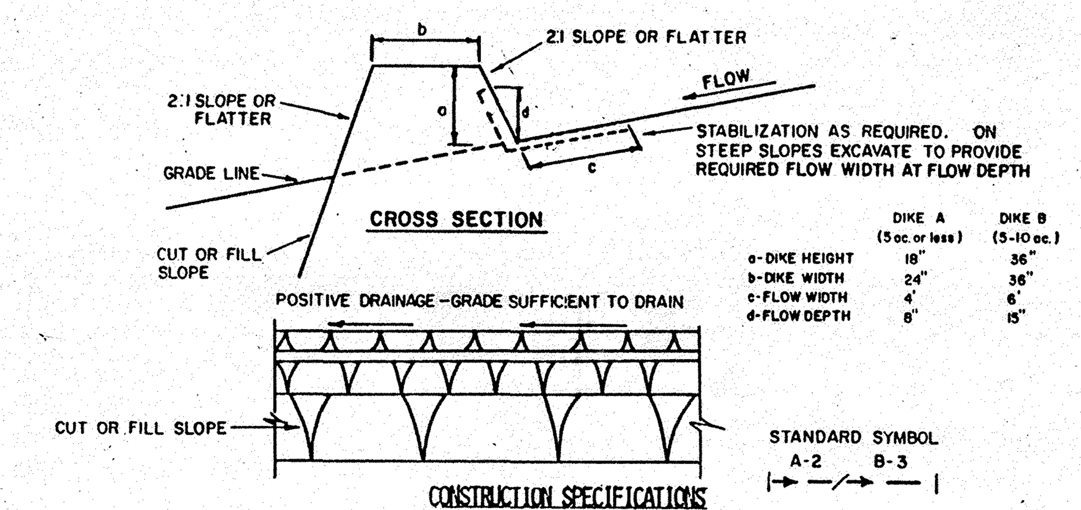

	DIKE A (5 ac. or less)	DIKE B (5-10 ac.)
a-DIKE HEIGHT	18"	36"
b-DIKE WIDTH	24"	36"
c-FLOW WIDTH	4'	6'
d-FLOW DEPTH	8"	15"

STANDARD SYMBOL
A-2 B-3

CONSTRUCTION SPECIFICATIONS

1. ALL DIKES SHALL BE COMPACTED BY EARTH-MOVING EQUIPMENT.
2. ALL DIKES SHALL HAVE POSITIVE DRAINAGE TO AN OUTLET.
3. TOP WIDTH MAY BE WIDER AND SIDE SLOPES MAY BE FLATTER IF DESIRED TO FACILITATE CROSSING BY CONSTRUCTION TRAFFIC.
4. FIELD LOCATION SHOULD BE ADJUSTED AS NEEDED TO UTILIZE A STABILIZED SAFE OUTLET.
5. EARTH DIKES SHALL HAVE AN OUTLET THAT FUNCTIONS WITH A MINIMUM OF EROSION. RUNOFF SHALL BE CONVEYED TO A SEDIMENT TRAPPING DEVICE SUCH AS A SEDIMENT TRAP OR SEDIMENT BASIN WHERE EITHER THE DIKE CHANNEL OR THE DRAINAGE AREA ABOVE THE DIKE ARE NOT ADEQUATELY STABILIZED.
6. STABILIZATION SHALL BE: (A) IN ACCORDANCE WITH STANDARD SPECIFICATIONS FOR SEED AND STRAW MULCH OR STRAW MULCH IF NOT IN SEEDING SEASON, (B) FLOW CHANNEL AS PER THE CHART BELOW.

FLOW CHANNEL STABILIZATION

TYPE OF TREATMENT	CHANNEL GRADE	DIKE A	DIKE B
1	.5-3.0%	SEED AND STRAW MULCH	SEED AND STRAW MULCH
2	3.1-5.0%	SEED AND STRAW MULCH	SEED USING JUTE, OR EXCELSIOR; SOD; 2" STONE
3	5.1-8.0%	SEED WITH JUTE, OR SOD; 2" STONE	LINED RIP-RAP 4-8"
4	8.1-20%	LINED RIP-RAP 4-8"	ENGINEERING DESIGN

A. STONE TO BE 2 INCH STONE, OR RECYCLED CONCRETE EQUIVALENT, IN A LAYER AT LEAST 3 INCHES IN THICKNESS AND BE PRESSED INTO THE SOIL WITH CONSTRUCTION EQUIPMENT.
B. RIP-RAP TO BE 4-8 INCHES IN A LAYER AT LEAST 8 INCHES THICKNESS AND PRESSED INTO THE SOIL.
C. APPROVED EQUIVALENTS CAN BE SUBSTITUTED FOR ANY OF THE ABOVE MATERIALS.

7. PERIODIC INSPECTION AND REQUIRED MAINTENANCE MUST BE PROVIDED AFTER EACH RAIN EVENT.

U.S. DEPARTMENT OF AGRICULTURE SOIL CONSERVATION SERVICE COLLEGE PARK, MARYLAND	EARTH DIKE	STANDARD DRAWING ED-I

GENERAL SEDIMENT CONTROL CONDITIONS AND NOTES

1. THE PERMITTEE SHALL NOTIFY THE DEPARTMENT (DEP) FORTY-EIGHT HOURS BEFORE COMMENCING ANY LAND DISTURBING ACTIVITY AND, UNLESS WAIVED BY THE DEPARTMENT, SHALL BE REQUIRED TO HOLD A PRE-CONSTRUCTION MEETING BETWEEN HIMSELF OR HIS REPRESENTATIVE AND AN AUTHORIZED REPRESENTATIVE OF THE DEPARTMENT.
2. THE PERMITTEE MUST OBTAIN INSPECTION AND APPROVAL BY DEP AT THE FOLLOWING POINTS:
   A. AT THE REQUIRED PRE-CONSTRUCTION MEETING.
   B. FOLLOWING INSTALLATION OF SEDIMENT CONTROL MEASURES AND PRIOR TO ANY OTHER LAND DISTURBING ACTIVITY.
   C. DURING THE INSTALLATION OF A SEDIMENT BASIN OR STORMWATER MANAGEMENT STRUCTURE AT THE REQUIRED INSPECTION POINTS (SEE INSPECTION CHECKLIST ON PLAN). NOTIFICATION PRIOR TO COMMENCING CONSTRUCTION IS MANDATORY.
   D. PRIOR TO REMOVAL OR MODIFICATION OF ANY SEDIMENT CONTROL STRUCTURE(S).
   E. PRIOR TO FINAL ACCEPTANCE.
3. THE PERMITTEE SHALL CONSTRUCT ALL EROSION AND SEDIMENT CONTROL MEASURES PER THE APPROVED PLAN AND CONSTRUCTION SEQUENCE, SHALL HAVE THEM INSPECTED AND APPROVED BY THE DEPARTMENT PRIOR TO BEGINNING ANY OTHER LAND DISTURBANCES, SHALL ENSURE THAT ALL RUNOFF FROM DISTURBED AREAS IS DIRECTED TO THE SEDIMENT CONTROL DEVICES, AND SHALL NOT REMOVE ANY EROSION OR SEDIMENT CONTROL MEASURE WITHOUT PRIOR PERMISSION FROM THE DEPARTMENT.
4. THE PERMITTEE SHALL PROTECT ALL POINTS OF CONSTRUCTION INGRESS AND EGRESS TO PREVENT THE DEPOSITION OF MATERIALS ONTO TRAVERSED PUBLIC THOROUGHFARE(S). ALL MATERIALS DEPOSITED ONTO PUBLIC THOROUGHFARE(S) SHALL BE REMOVED IMMEDIATELY.
5. THE PERMITTEE SHALL INSPECT PERIODICALLY AND MAINTAIN CONTINUOUSLY IN EFFECTIVE OPERATING CONDITION ALL EROSION AND SEDIMENT CONTROL MEASURES UNTIL SUCH TIMES AS THEY ARE REMOVED WITH PRIOR PERMISSION FROM THE DEPARTMENT.
6. ALL SEDIMENT BASINS, TRAP EMBANKMENTS, PERIMETER DIKES AND ALL DISTURBED SLOPES STEEPER OR EQUAL TO 3:1 SHALL BE STABILIZED WITH SOD, SEED AND ANCHORED STRAW MULCH, OR OTHER APPROVED STABILIZATION MEASURES, WITHIN SEVEN (7) CALANDER DAYS OF ESTABLISHMENT. ALL AREAS DISTURBED OUTSIDE OF THE PERIMETER SEDIMENT CONTROL SYSTEM MUST BE MINIMIZED AND STABILIZED IMMEDIATELY. MAINTENANCE MUST BE PERFORMED AS NECESSARY TO ENSURE CONTINUED STABILIZATION.
7. THE PERMITTEE SHALL APPLY SOD, SEED AND ANCHORED STRAW MULCH, OR OTHER APPROVED STABILIZATION MEASURES TO ALL DISTURBED AREAS WITHIN FOURTEEN (14) CALANDAR DAYS AFTER STRIPPING AND GRADING ACTIVITIES HAVE CEASED ON THAT AREA. MAINTENANCE SHALL BE PERFORMED AS NECESSARY TO ENSURE CONTINUED STABILIZATION. ACTIVE CONSTRUCTION AREAS, SUCH AS BORROW OR STOCKPILE AREAS, ROADWAY IMPROVEMENTS, AND AREAS WITHIN FIFTY (50) FEET OF A BUILDING UNDER CONSTRUCTION MAY BE EXEMPTED FROM THIS REQUIREMENT, PROVIDED THAT EROSION AND SEDIMENT CONTROL MEASURES ARE INSTALLED AND MAINTAINED TO PROTECT THOSE AREAS.
8. PRIOR TO REMOVAL OF SEDIMENT CONTROL MEASURES, THE PERMITTEE SHALL STABILIZE ALL CONTRIBUTORY DISTURBED AREAS USING SOD OR AN APPROVED PERMANENT SEED MIXTURE WITH REQUIRED SOIL AMENDMENTS AND AN APPROVED ANCHORED MULCH. WOOD FIBER MULCH MAY ONLY BE USED IN SEEDING SEASON WHERE THE SLOPE DOES NOT EXCEED 10% AND GRADING HAS BEEN DONE TO PROMOTE SHEET FLOW DRAINAGE. AREAS BROUGHT TO FINISHED GRADE DURING THE SEEDING SEASON SHALL BE PERMANENTLY STABILIZED WITHIN FOURTEEN (14) CALANDAR DAYS OF ESTABLISHMENT. WHEN PROPERTY IS BROUGHT TO FINISHED GRADE DURING THE MONTHS OF NOVEMBER THROUGH FEBRUARY, AND PERMANENT STABILIZATION IS FOUND TO BE INPRACTICAL, AN APPROVED TEMPORARY SEED AND STRAW ANCHORED MULCH SHALL BE APPLIED TO DISTURBED AREAS. THE FINAL PERMANENT STABILIZATION OF SUCH PROPERTY SHALL BE COMPLETED PRIOR TO THE FOLLOWING APRIL 15.
9. THE SITE PERMIT, WORK, MATERIALS, APPROVED SC/SM PLANS AND TEST REPORTS SHALL BE AVAILABLE AT THE SITE FOR INSPECTION BY DULY AUTHORIZED OFFICIALS OF MONTGOMERY COUNTY.
10. SURFACE DRAINAGE FLOWS OVER UNSTABILIZED CUT AND FILL SLOPES SHALL BE CONTROLLED BY EITHER PREVENTING DRAINAGE FLOWS FROM TRAVERSING THE SLOPES OR BY INSTALLING MECHANICAL DEVICES TO LOWER THE WATER DOWNSLOPE WITHOUT CAUSING EROSION. DIKES SHALL BE INSTALLED AND MAINTAINED AT THE TOP OF CUT OR FILL SLOPES UNTIL THE SLOPE AND DRAINAGE AREA TO IT ARE FULLY STABILIZED, AT WHICH TIME THEY MUST BE REMOVED AND FINAL GRADING DONE TO PROMOTE SHEET FLOW DRAINAGE. MECHANICAL DEVICES MUST BE PROVIDED AT POINTS OF CONCENTRATED FLOW WHERE EROSION IS LIKELY TO OCCUR.
11. PERMANENT SWALES OR OTHER POINTS OF CONCENTRATED WATER FLOW SHALL BE STABILIZED WITH SOD OR SEED WITH AN APPROVED EROSION CONTROL MATTING OR BY OTHER APPROVED STABILIZATION MEASURES.
12. TEMPORARY SEDIMENT CONTROL DEVICES SHALL BE REMOVED, WITH PERMISSION OF THE DEPARTMENT, WITHIN THIRTY (30) CALANDAR DAYS FOLLOWING ESTABLISHMENT OF PERMANENT STABILIZATION IN ALL CONTRIBUTORY DRAINAGE AREAS. STORMWATER MANAGEMENT STRUCTURES USED TEMPORARILY FOR SEDIMENT CONTROL SHALL BE CONVERTED TO THE PERMANENT CONFIGURATION WITHIN THIS TIME PERIOD AS WELL.
13. NO PERMANENT CUT OR FILL SLOPE WITH A GRADIENT STEEPER THAN 3:1 WILL BE PERMITTED IN LAWN MAINTENANCE AREAS. A SLOPE GRADIENT OF UP TO 2:1 WILL BE PERMITTED IN NON-MAINTENANCE AREAS PROVIDED THAT THOSE AREAS ARE INDICATED ON THE EROSION AND SEDIMENT CONTROL PLAN WITH A LOW-MAINTENANCE GROUND COVER SPECIFIED FOR PERMANENT STABILIZATION. SLOPE GRADIENT STEEPER THAN 2:1 WILL NOT BE PERMITTED WITH VEGETATIVE STABILIZATION.
14. THE PERMITTEE SHALL INSTALL A SPLASHBLOCK AT THE BOTTOM OF EACH DOWNSPOUT UNLESS THE DOWNSPOUT IS CONNECTED BY A DRAIN LINE TO AN ACCEPTABLE OUTLET.
15. FOR FINISHED GRADING, THE PERMITTEE SHALL PROVIDE ADEQUATE GRADIENTS SO AS TO: (1) PREVENT WATER FROM STANDING ON THE SURFACE OF LAWNS MORE THAN TWENTY-FOUR (24) HOURS AFTER THE END OF A RAINFALL, EXCEPT IN DESIGNATED DRAINAGE COURSES AND SWALE FLOW AREAS WHICH MAY DRAIN AS LONG AS FORTY-EIGHT (48) HOURS AFTER THE END OF A RAINFALL, AND (2) PROVIDE POSITIVE DRAINAGE AWAY FROM ALL BUILDING FOUNDATIONS OR OPENINGS.
16. SEDIMENT TRAPS OR BASINS ARE NOT PERMITTED WITHIN 20 FEET OF A BUILDING WHICH IS EXISTING OR UNDER CONSTRUCTION. NO BUILDING MAY BE CONSTRUCTED WITHIN 20 FEET OF A SEDIMENT TRAP OR BASIN.
17. ALL INLETS IN NON-SUMP AREAS SHALL HAVE ASPHALT BERMS INSTALLED AT THE TIME OF BASE PAVING ESTABLISHMENT.
18. THE SEDIMENT CONTROL INSPECTOR HAS THE OPTION OF REQUIRING ADDITIONAL SEDIMENT-CONTROL MEASURES, IF DEEMED NECESSARY.
19. ALL TRAP ELEVATIONS ARE RELATIVE TO THE OUTLET ELEVATION, WHICH MUST BE ON EXISTING UNDISTURBED GROUND.
20. VEGETATIVE STABILIZATION SHALL BE PERFORMED IN ACCORDANCE WITH THE STANDARDS AND SPECIFICATIONS FOR SOIL EROSION AND SEDIMENT CONTROL. REFER TO THE FOLLOWING WHEN APPLYING: TEMPORARY SEEDING 50.01, PERMANENT SEEDING 51.01, MULCHING 52.01, SOD 54.01, AND GROUND COVERS 55.01.
21. TEMPORARY SEDIMENT TRAP(S) SHALL BE CLEANED OUT AND RESTORED TO THE ORIGINAL DIMENSIONS WHEN SEDIMENT HAS ACCUMULATED TO A POINT ONE HALF (½) THE DEPTH BETWEEN THE OUTLET CREST AND THE BOTTOM OF THE TRAP.
22. SEDIMENT REMOVED FROM TRAPS SHALL BE PLACED AND STABILIZED IN APPROVED AREAS, BUT NOT WITHIN A FLOODPLAIN.
23. ALL SEDIMENT BASINS AND TRAPS MUST BE SURROUNDED WITH A WELDED WIRE SAFETY FENCE. THE FENCE MUST BE AT LEAST 42 INCHES HIGH, HAVE POSTS SPACED NO FARTHER APART THAT 8 FEET, HAVE MESH OPENINGS NO GREATER THAT 2 INCHES IN WIDTH AND 4 INCHES IN HEIGHT WITH A MINIMUM OF 14 GAUGE WIRE. SAFETY FENCE MUST BE MAINTAINED IN GOOD CONDITION AT ALL TIMES.
24. NO EXCAVATION IN THE AREA OF EXISTING UTILITIES IS PERMITTED UNLESS THEIR LOCATION HAS BEEN DETERMINED. CALL "MISS UTILITY" AT 1-800-257-7777 48 HOURS PRIOR TO THE START OF WORK.
25. OFF-SITE SPOIL OR BORROW AREAS MUST HAVE PRIOR APPROVAL BY DEP.

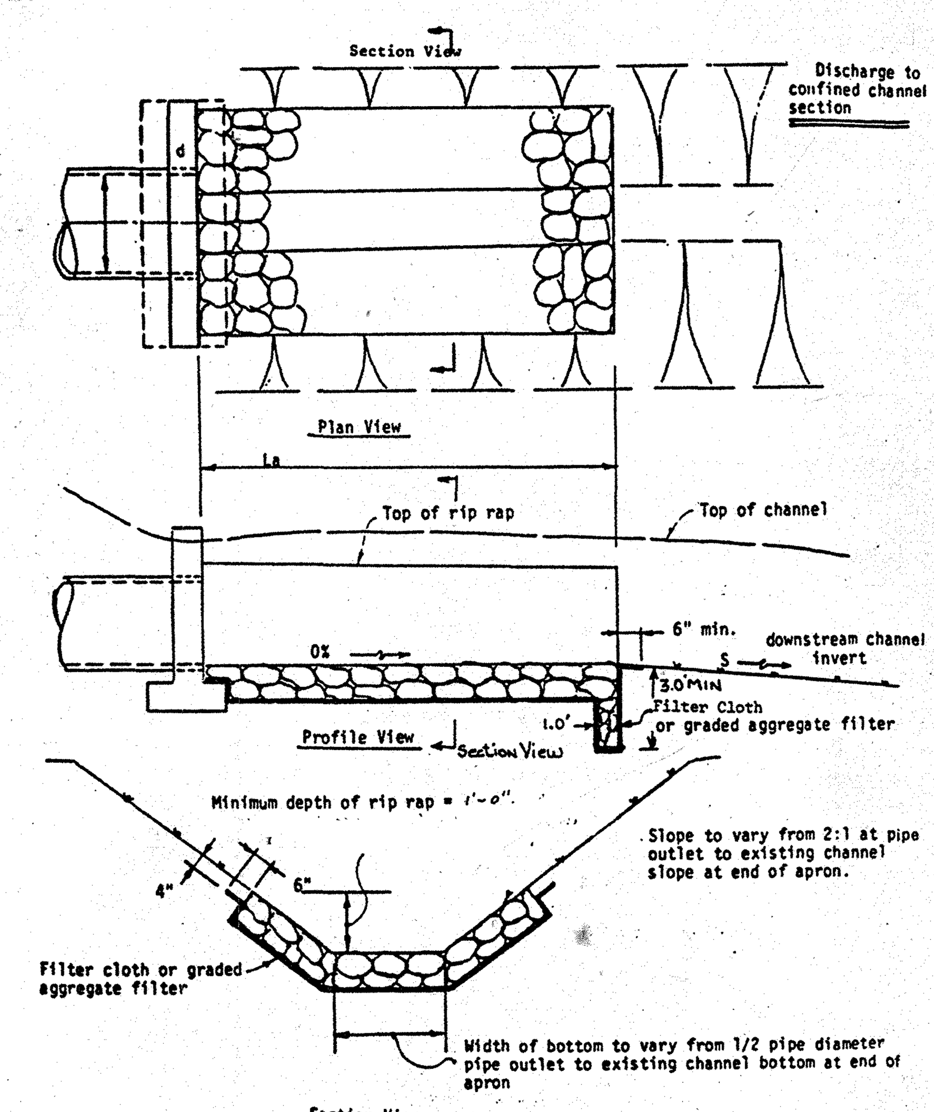

U.S DEPARTMENT OF AGRICULTURE SOIL CONSERVATION SERVICE COLLEGE PARK, MARYLAND	RIPRAP OUTLET PROTECTION-II	STANDARD DRAWING ROP-II

38.08

SILT FENCE

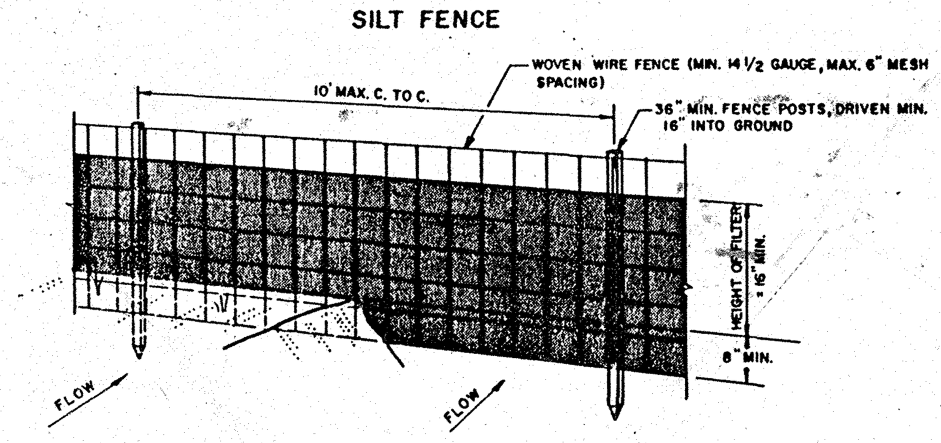

PERSPECTIVE VIEW

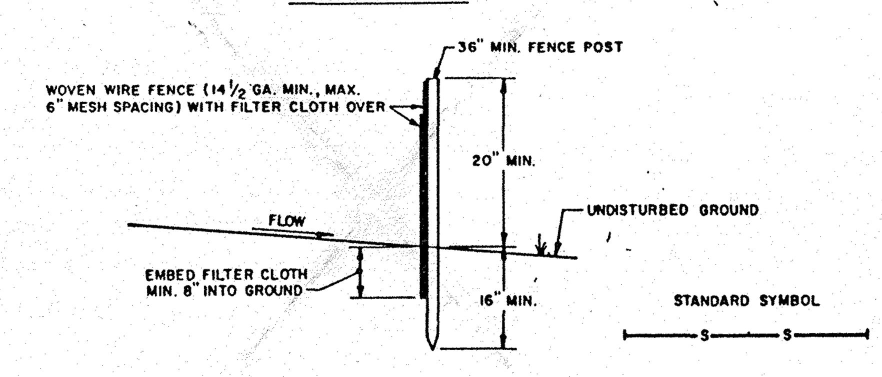

SECTION

CONSTRUCTION NOTES FOR FABRICATED SILT FENCE

1. WOVEN WIRE FENCE TO BE FASTENED SECURELY TO FENCE POSTS WITH WIRE TIES OR STAPLES.
2. FILTER CLOTH TO BE FASTENED SECURELY TO WOVEN WIRE FENCE WITH TIES SPACED EVERY 24" AT TOP AND MID SECTION.
3. WHEN TWO SECTIONS OF FILTER CLOTH ADJOIN EACH OTHER THEY SHALL BE OVER-LAPPED BY SIX INCHES AND FOLDED.
4. MAINTENANCE SHALL BE PERFORMED AS NEEDED AND MATERIAL REMOVED WHEN "BULGES" DEVELOP IN THE SILT FENCE.

POSTS: STEEL EITHER T OR U TYPE OR 2" HARDWOOD

FENCE: WOVEN WIRE, 14 GA. 6" MAX. MESH OPENING

FILTER CLOTH: FILTER X, MIRAFI 100X, STABILINKA T140N OR APPROVED EQUAL

PREFABRICATED UNIT: GEOFAB, ENVIROFENCE, OR APPROVED EQUAL.

U.S. DEPARTMENT OF AGRICULTURE SOIL CONSERVATION SERVICE COLLEGE PARK, MARYLAND	SILT FENCE	STANDARD DRAWING SF-1

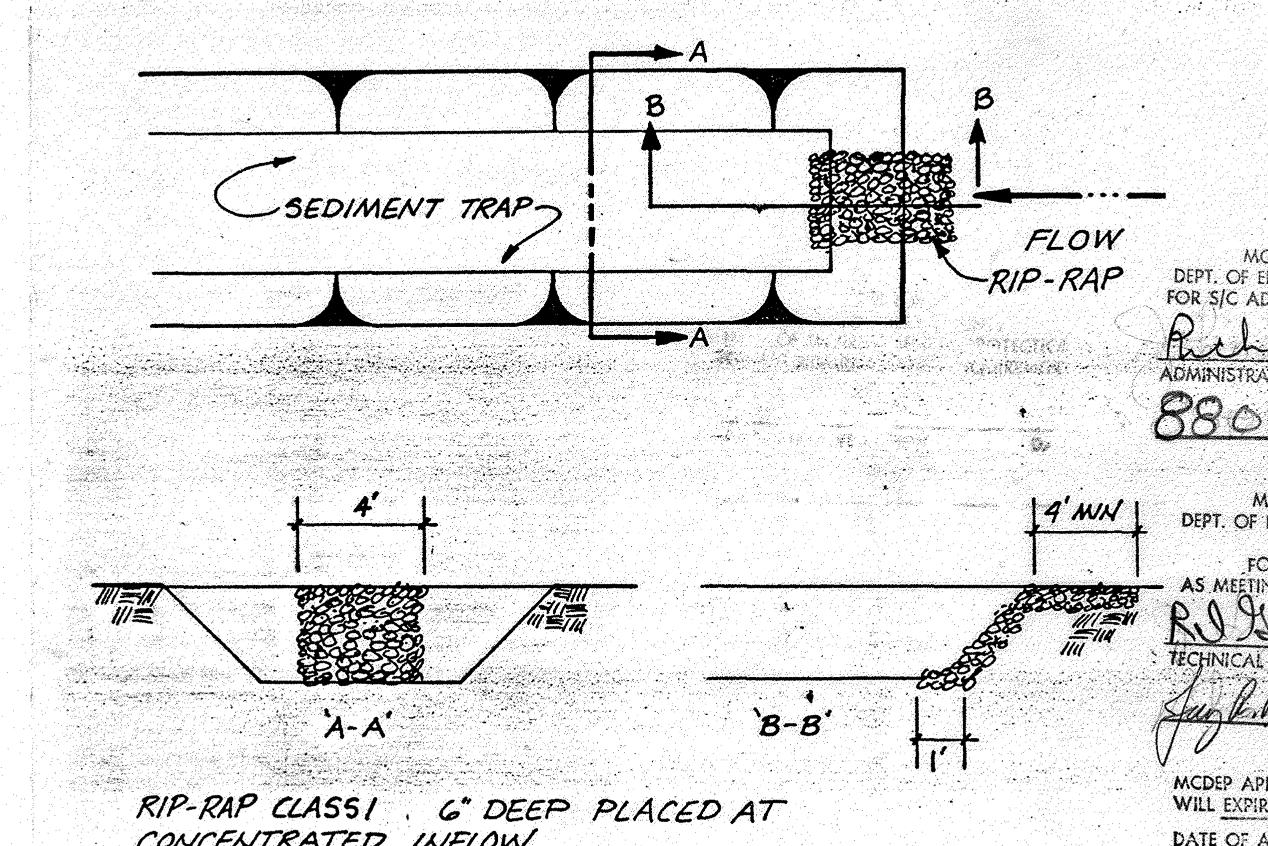

RIP-RAP CLASS I. 6" DEEP PLACED AT CONCENTRATED INFLOW

SEDIMENT TRAP INFLOW PROTECTION

N.T.S.

APPROVED
MONTGOMERY COUNTY
DEPT. OF ENVIRONMENTAL PROTECTION
FOR S/C ADMINISTRATIVE REQUIREMENTS
Richard I Geo 3/9/90
ADMINISTRATIVE REVIEW DATE
8807200002

MONTGOMERY COUNTY
DEPT. OF ENVIRONMENTAL PROTECTION
APPROVED
FOR SEDIMENT CONTROL
AS MEETING TECHNICAL REQUIREMENTS
R I Geo 3/9/90
TECHNICAL REVIEW DATE
3/14/90
DATE

MCDEP APPROVAL OF THIS PLAN WILL EXPIRE ONE YEAR FROM THE DATE OF APPROVAL IF THE PROJECT HAS NOT STARTED AND/OR DOES NOT CONTINUE ON SCHEDULE

STATE OF MARYLAND
ROBERT G. REED
No. 12309
REGISTERED PROFESSIONAL ENGINEER

NUMBER	REVISION	DATE

PBSJ POST, BUCKLEY, SCHUH & JERNIGAN, INC.
2000-15TH ST., N. SUITE 506
ARLINGTON, VA 22201 (703) 524-7275

DES. J.B.
DR. J.B.
CHK. B.E.
REVISIONS

MONTGOMERY COUNTY MARYLAND
DEPARTMENT OF TRANSPORTATION
ROCKVILLE, MD.

BELLS MILL RD. & FALLS RD.

SEDIMENT CONTROL DETAILS
STA 10+08.00 TO STA 17+10.00

APPROVED 7/24/89
DIV. OF TRAF. ENGR. CHIEF, DIV. TRANS. ENGR.

PROJECT: 703117 DWG: 8 OF 8

Maryland State Archives
131007
MSA CE 189 93-8