REINFORCING STEEL NOTES

Minimum Cover From The Concrete Surface To The Outermost Surface Of The Reinforcing Steel Shall Be 2 Inches Unless Otherwise Noted.

All Transverse Reinforcing Steel Shall Be #5 At 12 Inches Unless Otherwise Noted.

All Tension Splices Shall Be Contact Lapped A Minimum Of 24 Bar Diameters, Unless Otherwise Noted. When Bars Of Different Sizes Are Lapped, The Length Of Splice Shall Be Determined By The Larger Bar.

All Reinforcing Steel Shall Conform To A.S.T.M. Designation A-615 Grade 40. Welded Wire Fabric Shall Conform To A.S.T.M. Designation A-185, With The Wire Conforming To A.S.T.M. Designation A-82.

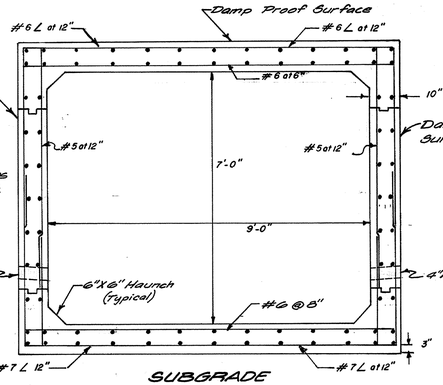

DAMP PROOFING

Damp Proofing Shall Be Applied To All Concrete Surfaces That Are In Contact With Earth.

SUBGRADE

The Subgrade Below The Box Shall Consist Of A Minimum Of 6" Of M.S.H.A. Number 6 Stone. Stone Shall Be Carried Around The Wingwalls At The Outfall To Allow For Drainage Under The Box.

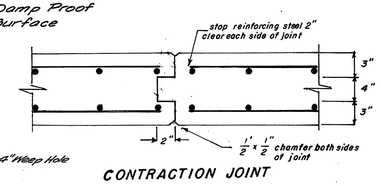

CONTRACTION JOINT

WATER PROOFING JOINTS

Apply Two Ply Membrane Water Proofing 18" Wide To The Earth Side Above The Normal Water Surface Of All Joints Having Air On One Side And Earth On The Other.

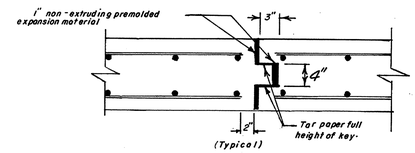

EXPANSION JOINT

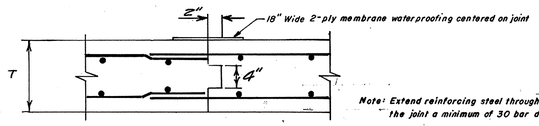

Note: Extend reinforcing steel through the joint a minimum of 30 bar diameters.

CONSTRUCTION JOINT

SECTION B-B BOX CULVERT

Scale 1/2" = 1'

TYPICAL JOINT DETAILS

No Scale

CHAMFER

All Exposed Corners Of Concrete Shall Be Chamfered 3/4" x 3/4" With Milled Chamfer Strips.

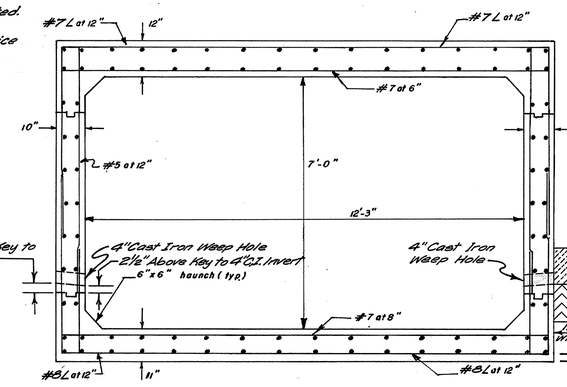

WEEP HOLE TYPICAL DETAIL

12" Continuous MSHA No. 6 Stone Granular Backfill.

INVERT 4" C.I. WEEP HOLE

12" Continuous Cement Grout or Impervious Clay.

12" Wide

NOTE: Weep Holes Shall Consist Of 4" C.I. Pipe On A Slope Of 1" Per Foot. The Rear Of The Weep Holes Shall Be Covered With Aluminum Screening To Prevent Clogging. Weep Holes Shall Be Spaced A Maximum Of 8'-0" C/C.

SECTION A-A BOX CULVERT

Scale 1/2" = 1'

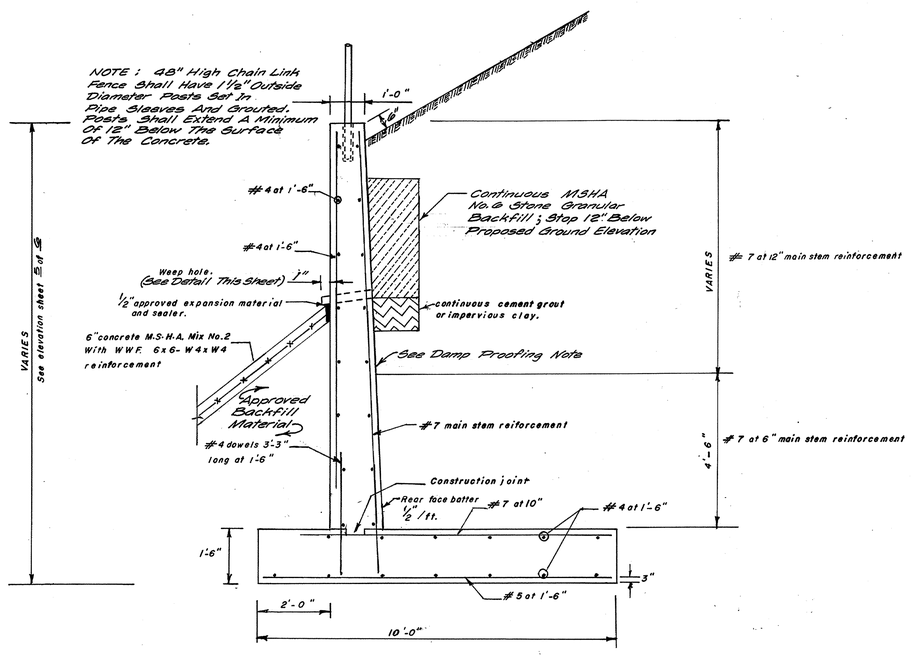

CROSS SECTION WING WALL (Typical)

No Scale

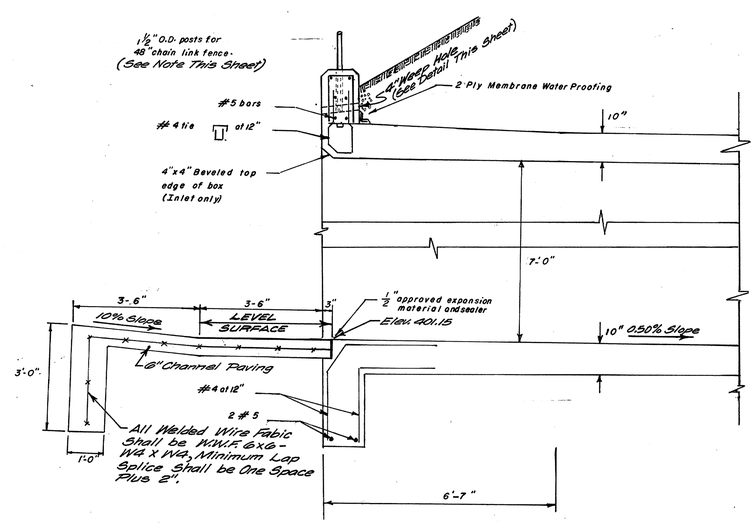

Transition from section A-A to section B-B. Increase thickness top and bottom slab linearly in this section. See section A-A for size and spacing of reinforcement in this section.

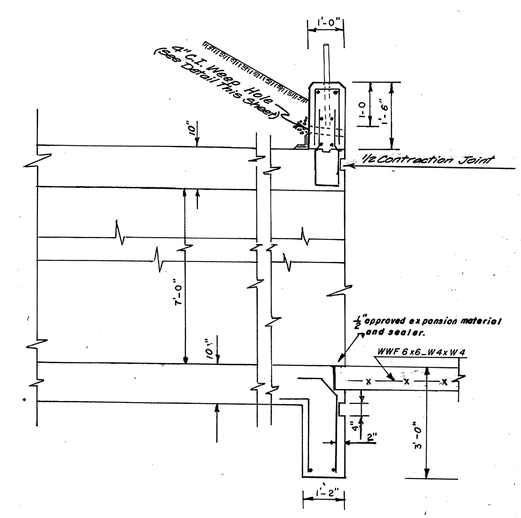

DETAIL - BOX FOOTER, HEAD WALL & TRANSITION FROM SECTION A-A TO B-B

No Scale

NUMBER	REVISION	DATE

DES. JJR
DR. RHJ & JAWER 3-16-78
CHK.
REVISIONS

MONTGOMERY COUNTY MARYLAND
DEPARTMENT OF TRANSPORTATION
ROCKVILLE, MD.

BATCHELLORS FOREST ROAD
BOX CULVERT DETAIL

Scale: as shown

APPROVED

CHIEF, DIV. OF TRANS. ENG'G. — DIRECTOR, DEP'T. OF TRANS.

PROJECT 733800-105 DWG: 5 OF 5

MSA CE 189 78-6

Maryland State Archives