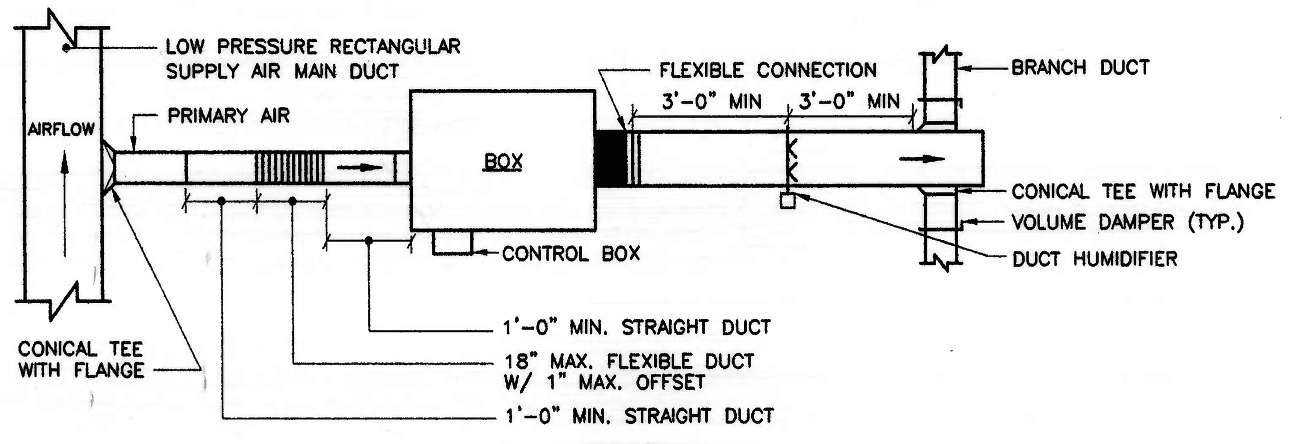

PLAN VIEW

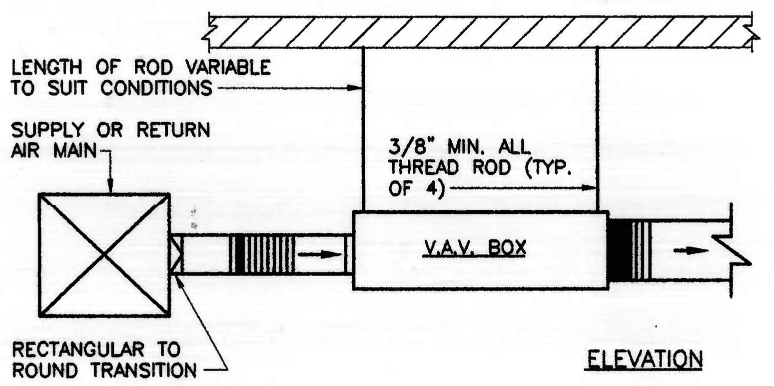

ELEVATION

PRESSURE INDEPENDENT V.A.V.

SCALE : NONE

NOTE: EXHAUST BOXES ARE SIMILAR

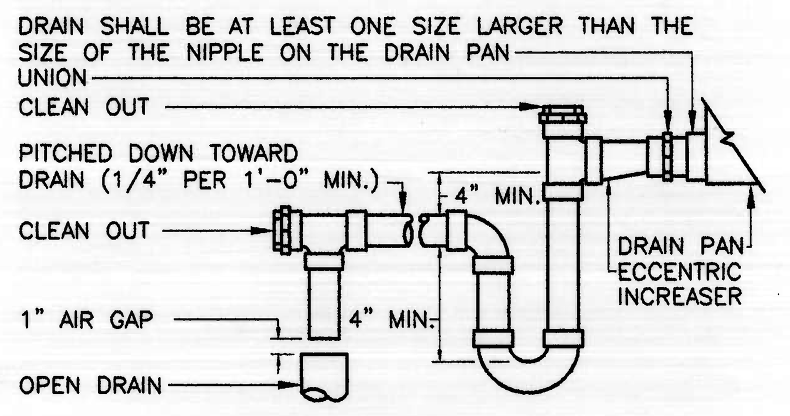

CONDENSATE DRAIN TRAP

SCALE: NONE

NOTE: INSTALL PER MANUFACTURER'S RECOMMENDATIONS.

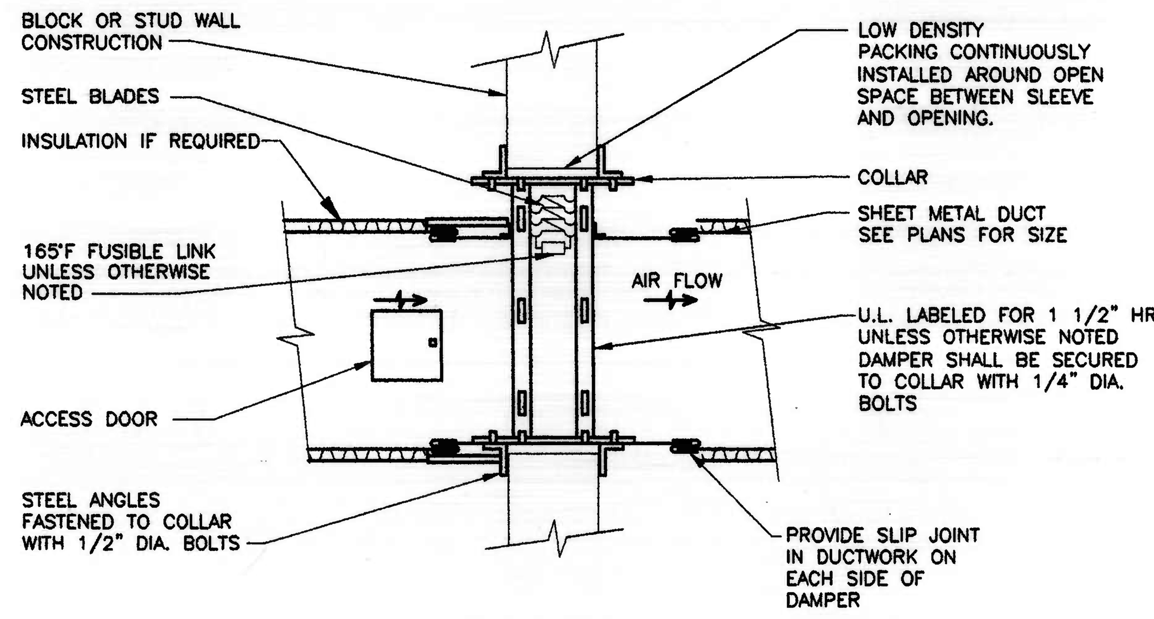

NOTE: INSTALLATION SHALL COMPLY WITH U.L. REQUIREMENTS

VERTICAL DYNAMIC FIRE DAMPER

SCALE: NONE

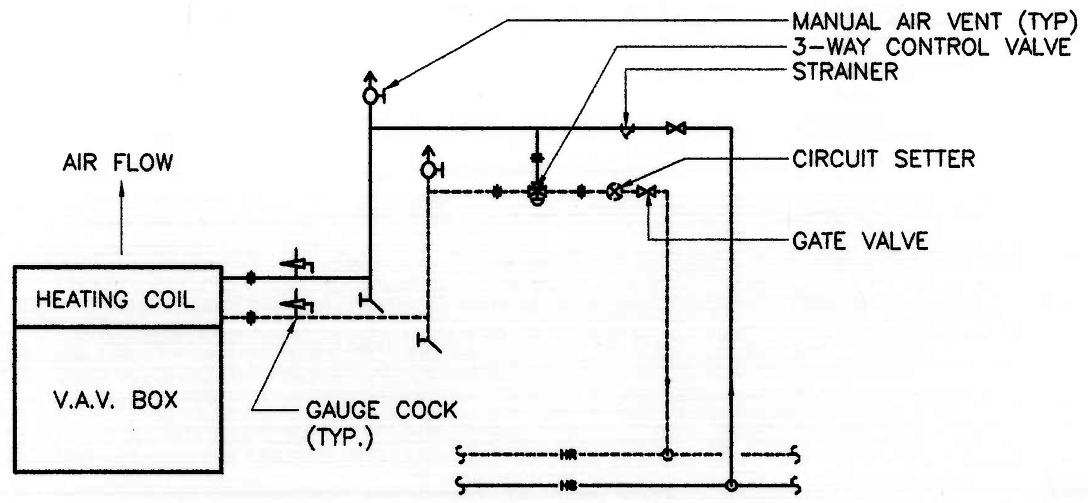

TERMINAL HEATING COIL

NO SCALE

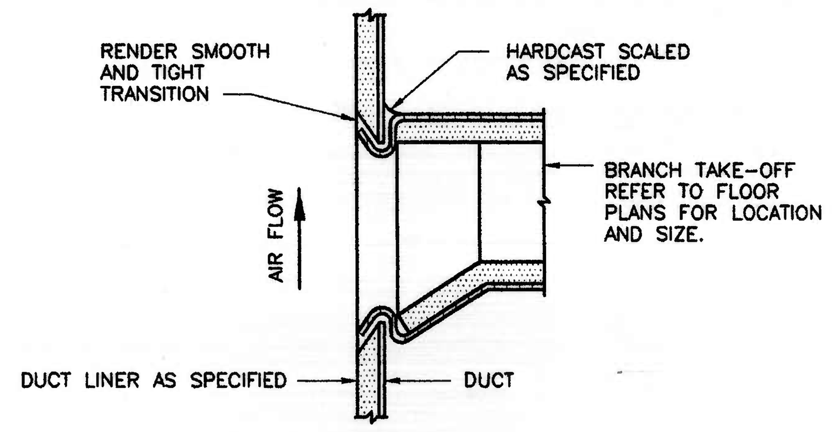

ACOUSTICAL LINED DUCT CONNECTION

SCALE: NONE

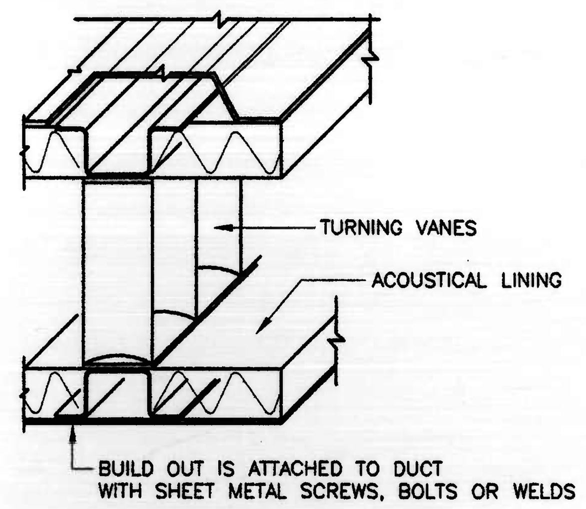

NOTE: 1. VANES AND DAMPERS OR OTHER DEVICES MUST BE INSTALLED IN A MANNER THAT WILL NOT DISRUPT LINER, RESTRICT DAMPER OPERATION OR INCREASE FRICTION LOSS.

HAT SECTION FOR VANES AND DAMPER

SCALE: NONE

NOTES:

1) FLEXIBLE DUCT SHOULD EXTEND STRAIGHT FOR SEVERAL INCHES FROM RECTANGULAR DUCT CONNECTION BEFORE BENDING.
2) MAXIMUM 5'-0" LENGTHS OF FLEXIBLE DUCTWORK. USE RIGID ROUND DUCTWORK WHEN RUNOUTS EXCEED 5'-0".

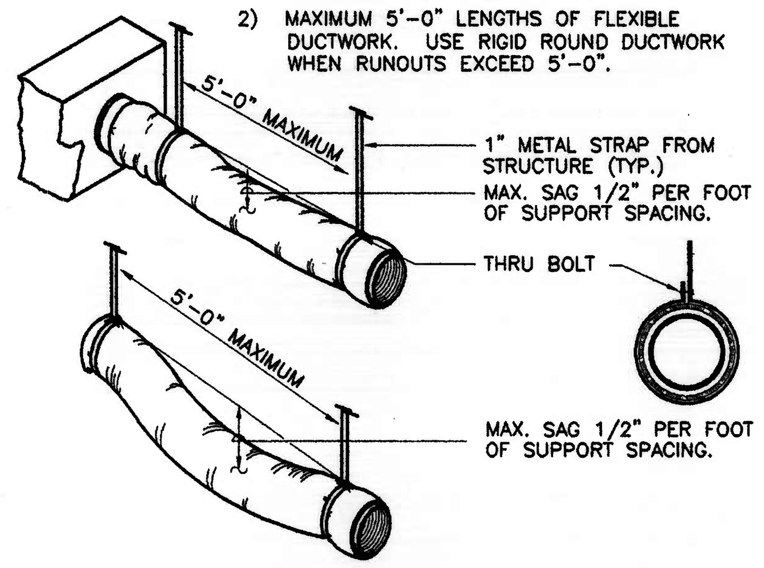

FLEXIBLE DUCT RUN-OUT SUPPORT DETAIL

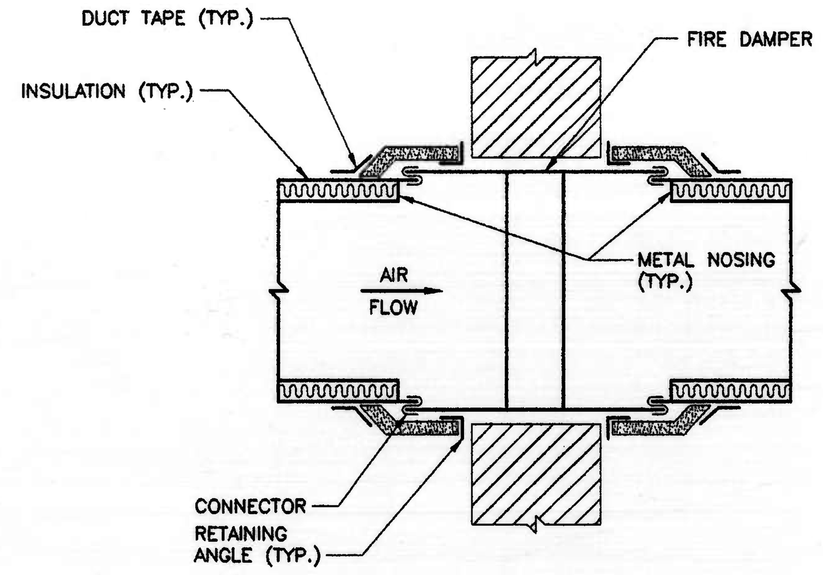

DUCT LINER INTERRUPTION

SCALE: NONE

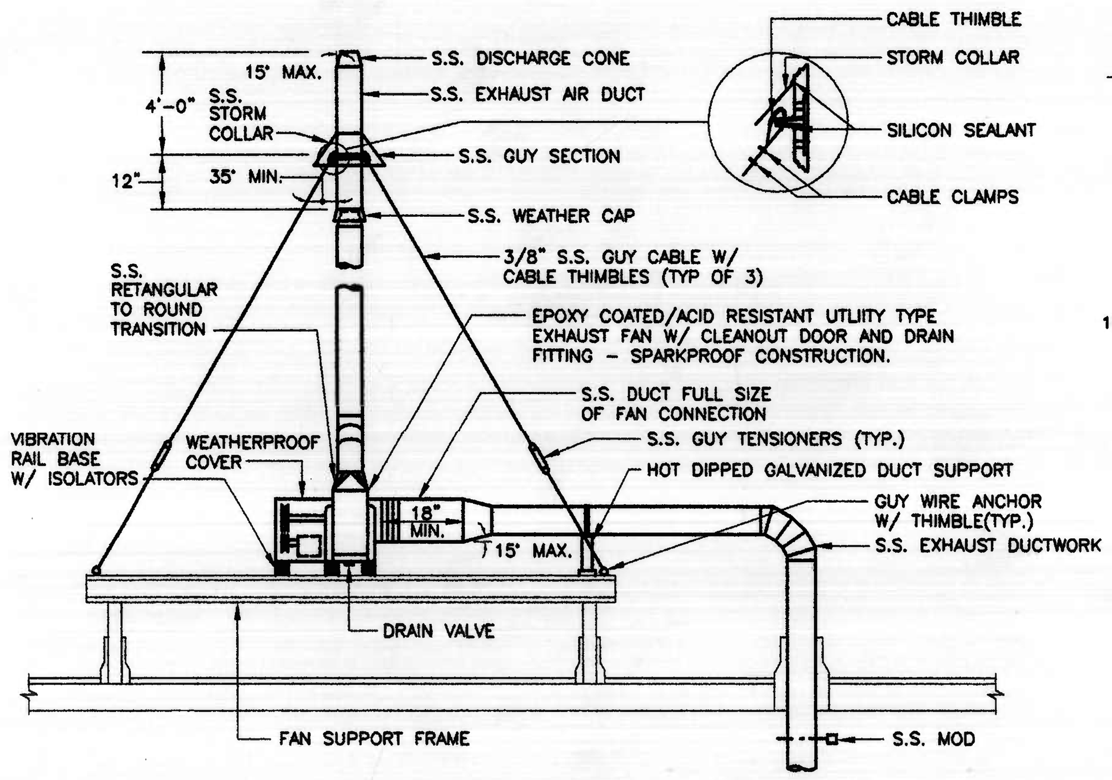

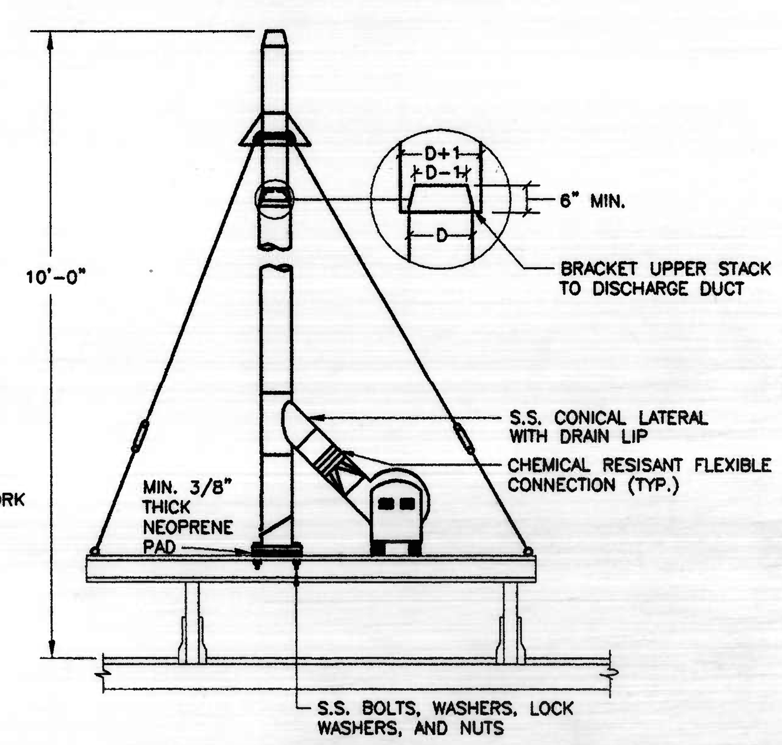

END VIEW

D=VERTICAL DISCHARGE DUCT DIAMETER AS INDICATED

VENTILATING FAN DETAIL

SCALE: NONE

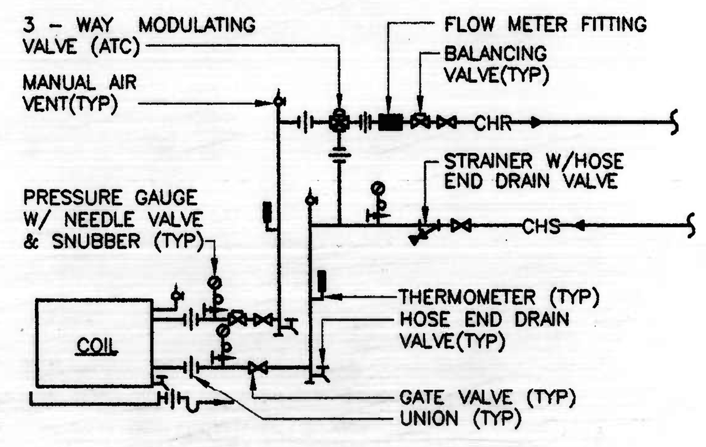

AHU PIPING COIL

SCALE: NONE

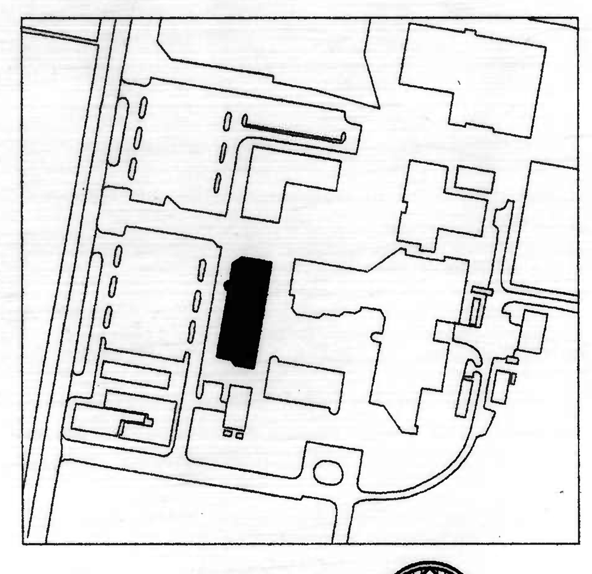

KEY PLAN

NOT TO SCALE

RENOVATIONS TO THE CLASSROOM BUILDING

CCBC DUNDALK CAMPUS
7200 Sollers Point Road
Baltimore, Maryland 21222-4694

CS&D

Architect
Cochran, Stephenson & Donkervoet, Incorporated

Mechanical/Electrical Engineer
Gipe Associates, Inc.

Civil/Structural Engineer
Carroll Engineering, Inc.

No.	Date	Revisions

Project No.: 0045-01

Date: 1/18/02

Scale: AS NOTED

Sheet Title: DETAILS

Sheet No.: M-9

D-022140