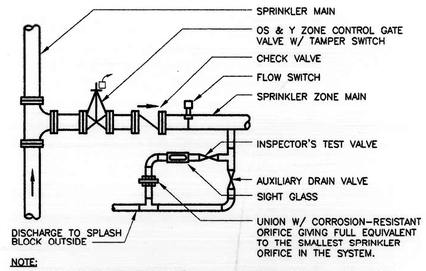

NOTE:
IN LIEU OF FABRICATING INSPECTOR'S TEST AND DRAIN ASSEMBLY CONTRACTOR MAY USE MANUFACTURED SINGLE TEST/DRAIN ASSEMBLY.

TYPICAL SPRINKLER ZONE VALVE ASSEMBLY PIPING DETAIL

SCALE: NONE

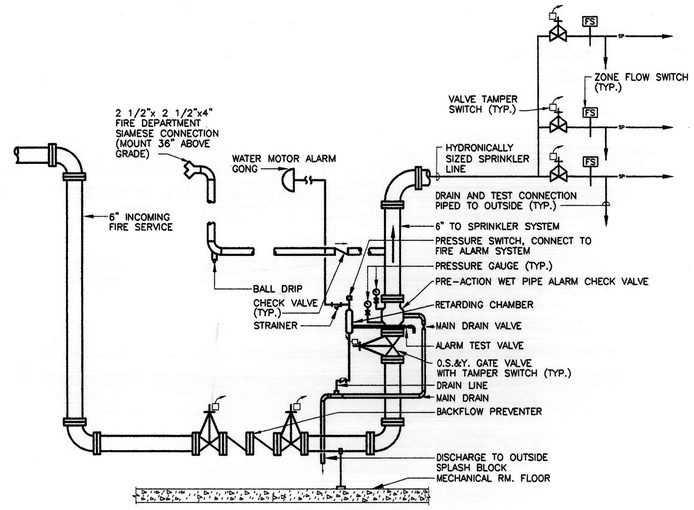

INCOMING FIRE PROTECTION PIPING

SCALE: NONE

NOTE: ALL PIPING AND APPURTENANCES SHALL CONFORM TO N.F.P.A.

PLUMBING FIXTURE

NO.	FIXTURE	C.W.	H.W.	SAN.	VENT	REMARKS
P-1	LAVATORY	1/2"	1/2"	1 1/2"	1 1/2"	1
P-2	SHOWER/EYE	1"		2"	1 1/2"	2
P-3	WATER COOLER	1/2"		1 1/2"	1 1/2"	
P-4	LAUNDRY SINK	1/2"	1/2"	3"	1 1/2"	
P100	LAB SINK	1/2"	1/2"	1 1/2"	1 1/2"	1
P101	SINK	1/2"	1/2"	1 1/2"	1 1/2"	1
P102	DISHWASHER	1/2"	1/2"	1 1/2"	1 1/2"	1

NOTE: 1 SINK TO BE PROVIDED BY LAB CASEWORK SUPPLIERS
2 PROVIDE FLOOR DRAIN (FD) AS SPECIFIED IN FLOOR BELOW SHOWER/EYE WASH REFER TO ARCHITECTURAL DRAWINGS FOR EXACT LOCATION.
3 REFER TO PLANS TO DETERMINE IN CW, HW IS REQUIRED.

PLUMBING LEGEND

SYMBOL	ABBREVIATION	DEFINITION
		GATE VALVE
		BALL VALVE
		FLOW METER FITTING
	CW	COLD WATER
	HW	HOT WATER
	HWR	HOT WATER RECIRC.
	G	GAS PIPING
	SW	STORM WATER
	SAN	SANITARY
		HOSE END DRAIN VALVE
		CONNECT TO EXISTING
		DEMOLITION ENDS HERE
	GPM	GALLONS PER MINUTE
	EX.	EXISTING
	DIA	DIAMETER
	RX.	REMOVE EXISTING
	CO.	CLEAN OUT
	TYP.	TYPICAL
	MIN.	MINIMUM
	DN.	DOWN
	D	DRAIN
	FD.	FLOOR DRAIN
	W/	WITH
		GAS COCK
		STOP VALVE

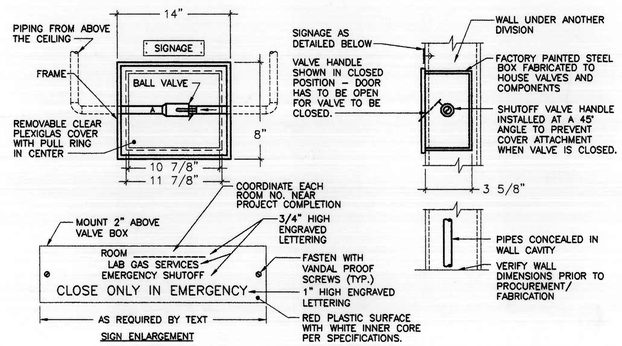

GAS SHUTOFF VALVE PIPING

SCALE: NONE

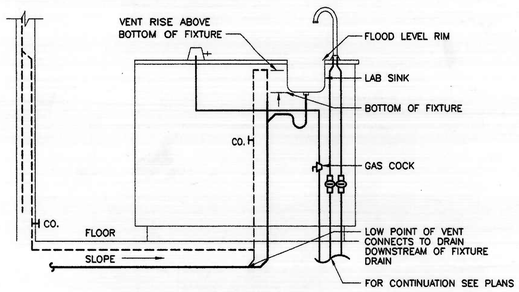

ISLAND FIXTURE PIPING

SCALE: NONE

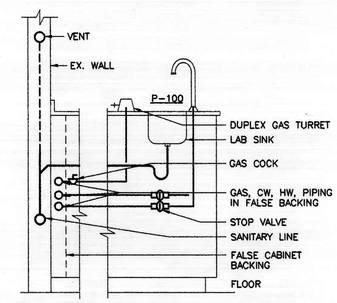

LAB SINK & CABINETRY PIPING

SCALE: NONE

GENERAL NOTES:

1. RUN ALL SOIL, WASTE, AND DRAIN PIPING WITH 2% MINIMUM GRADE UNLESS OTHERWISE NOTED. HORIZONTAL VENT PIPING SHALL BE GRADED TO DRIP BACK TO THE SOIL OR WASTE PIPE BY GRAVITY.
2. PROVIDE SHUT-OFF VALVES IN DOMESTIC WATER SYSTEM IN BRANCH LINES SERVING ONE OR MORE FIXTURES. THESE VALVES ARE IN ADDITION TO STOP-VALVES LOCATED AT FIXTURES.
3. UNLESS OTHERWISE NOTED, ALL PIPING AND DUCTWORK IS OVERHEAD, TIGHT TO UNDERSIDE OF SLAB, WITH SPACE FOR INSULATION, IF REQUIRED.
4. INSTALL PIPING AND DUCTWORK SO THAT ALL VALVES AND DAMPERS ARE ACCESSIBLE.
5. COORDINATE ALL MECHANICAL WORK WITH ELECTRICAL WORK, ETC., SHOWN ON OTHER DRAWINGS.
6. EXCEPT AS OTHERWISE SHOWN, LOCATE ALL ROOM THERMOSTATS 5'-0" (CENTERLINE) ABOVE FINISHED FLOOR ON THE VERTICAL CENTERLINE OF THE ROOM LIGHT SWITCH. NOTIFY THE ENGINEER OF ANY ROOMS WHERE THE ABOVE LOCATION CANNOT BE MAINTAINED OR WHERE THERE IS A QUESTION ON LOCATION.
7. CERTAIN ITEMS SUCH AS CLEANOUTS, ACCESS DOORS, RISE AND DROPS IN DUCTWORK, ETC., ARE INDICATED ON THE DRAWINGS FOR CLARITY OR A SPECIFIC LOCATION REQUIREMENT AND SHALL NOT BE INTERPRETED AS THE EXTENT OF THE REQUIREMENTS FOR THOSE ITEMS. THE CONTRACTOR SHALL BE RESPONSIBLE FOR THESE ITEMS AS REQUIRED ELSEWHERE IN THE CONTRACT DOCUMENTS.
8. ENTIRE BUILDING SHALL BE SPRINKLED IN ACCORDANCE WITH NFPA 13, INCLUDING TUNNEL AREA. SYSTEM SHALL BE HYDRAULICALLY DESIGNED.
9. REFER TO DRAWING M-2 FOR WORK IN THE TUNNEL AREA.
10. ALL FIRE PROTECTION SHUT-OFF AND CONTROL VALVES SHALL BE SUPERVISED.

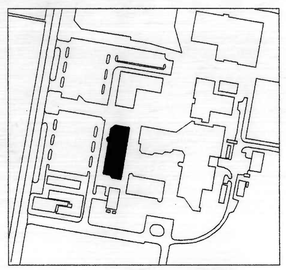

KEY PLAN
NOT TO SCALE

RENOVATIONS TO THE CLASSROOM BUILDING

CCBC DUNDALK CAMPUS
7200 Sollers Point Road
Baltimore, Maryland 21222-4694

CS&D

Architect
Cho Benholm & Sinkinson & Duckwornd, Incorporated
Tie Windsor at Canton Square
333 East Camden Street
Baltimore, Maryland 21202
Phone: 410-539-3080 Fax: 410-752-5853

Open Architecture Lab
Sidney Cooke & Associates
Sidney Cooke 1 Suite 102
Towson, Maryland 21204
Phone: 410-823-0100 Fax: 410-825-2458

Civil Engineer
Carroll Engineering, Inc.
8 East Pennsylvania Ave.
Towson, Maryland 21286
Phone: 410-823-4211 Fax: 410-296-6271

Mechanical Engineer
Carroll Engineering, Inc.
8 East Pennsylvania Ave.
Towson, Maryland 21286
Phone: 410-823-4211 Fax: 410-296-6271

No.	Date	Revisions

Project No.: 0045-01
Date: 1/18/02
Scale: AS NOTED
Sheet Title: LEGEND, SCHEDULES
Sheet No.: P-1

D-022080