## DESIGN CRITERIA

1. DESIGN GRAVITY LIVE LOADS:

| AREA | LIVE LOAD |
|---|---|
| SLAB-ON-GRADE | 100 PSF |
| CLASSROOMS | 40 PSF |
| CORRIDORS/STAIRS | 100 PSF |
| TOILET ROOMS | 100 PSF |
| MECHANICAL ROOMS | 150 PSF |
| PARTITIONS | 20 PSF |
| ROOF | 30 PSF + SNOW BUILDUP |

2. SNOW LOADING IBC 2000

| | |
|---|---|
| GROUND SNOW LOAD | 25 PSF |
| FLAT ROOF SNOW LOAD | 20 PSF |
| SNOW EXPOSURE FACTOR | 0.7 |
| SNOW LOAD IMPORTANCE | 1.10 |
| THERMAL FACTOR 1.0 | 1.00 |

3. WIND LOADING IBC 2000

| | |
|---|---|
| BASIC WIND SPEED (3 SECOND GUST) | 100 MPH |
| WIND LOAD IMPORTANCE FACTOR | 1.15 |
| WIND EXPOSURE CATEGORY | C |
| INTERNAL PRESSURE COEFFICIENT | 0.25 |
| WIND DESIGN PRESSURE | 28 PSF |
| COMPONET AND CLADDING PRESSURE | 23 PSF |

4. SEISMIC LOADING IBC 2000

| | |
|---|---|
| SEISMIC USE GROUP | II |
| Ss | 0.187g |
| S1 | 0.063g |
| SDS | 0.150g |
| SD1 | 0.071g |
| SITE CLASS | C |
| SEISMIC FACTOR | 1.25 |
| SEISMIC DESIGN CATEGORY | B |

BASIC SEISMIC FORCE RESISTING SYSTEM: STEEL ECCENTRICALLY, BRACED FRAMES, NON MOMENT RESISTING
DESIGN BASE SHEAR: 32.8K
ANALYSIS PROCEDURE: EQUIVALENT LATERAL FORCE PROCEDURE

5. THE BUILDING DESIGN LOADS LISTED ABOVE, INCLUDING LIVE LOADS, SNOW LOADS, WIND LOADS, AND SEISMIC LOADS, APPLY TO THE NEW STRUCTURE ONLY.
6. ANY MECHANICAL EQUIPMENT NOT SHOWN ON THE STRUCTURAL DRAWINGS AND HAVING A WEIGHT IN EXCESS OF 500 POUNDS SHALL BE BROUGHT TO THE ATTENTION OF THE STRUCTURAL ENGINEER PRIOR TO INSTALLATION.

## SUBMITTALS

1. BEFORE SUBMISSION OF SHOP DRAWINGS, THE CONTRACTOR SHALL HAVE DETERMINED AND VERIFIED ALL QUANTITIES, DIMENSIONS, SPECIFIED PERFORMANCE CRITERIA, INSTALLATION REQUIREMENTS, MATERIALS, CATALOG NUMBERS AND SIMILAR DATA AND SHALL HAVE COORDINATED EACH SHOP DRAWING WITH OTHER SHOP DRAWINGS AND THE REQUIREMENTS OF THE CONTRACT DOCUMENTS.
2. PRIOR TO SUBMISSIONS, THE CONTRACTOR SHALL STAMP OR PROVIDE A SIMILAR WRITTEN INDICATION THAT THE CONTRACTOR HAS REVIEWED THE SUBMISSION AND IS SATISFIED THE CONTENTS ARE IN COMPLIANCE WITH THE CONTRACT DOCUMENTS.
3. REPRINTS OF THE CONTRACT DOCUMENTS WILL NOT BE ACCEPTED.
4. ADEQUATE SETS SHALL BE SUBMITTED SO THAT THE ARCHITECT /ENGINEER CAN MAINTAIN ONE RECORD SET AT ALL TIMES.

## EXISTING CONSTRUCTION

1. ALL MEMBER SIZES AND DIMENSIONS AND ELEVATIONS OF EXISTING STRUCTURES SHOWN ON THE DRAWINGS ARE OBTAINED FROM AVAILABLE SOURCES, AND ARE NOT GUARANTEED TO BE TRUE AND EXACT. THE CONTRACTOR SHALL VERIFY THESE DIMENSIONS AND ELEVATIONS BY ACTUAL FIELD MEASUREMENTS PRIOR TO FABRICATION OF ANY MATERIALS AND START OF WORK, AND REPORT ANY DISCREPANCIES TO THE ARCHITECT/ENGINEER.
2. THE CONTRACTOR SHALL PROVIDE ALL SHORING, NEEDLING AND BRACING AS REQUIRED TO SUPPORT THE EXISTING STRUCTURE. THE CONTRACTOR SHALL EXAMINE THE EXISTING STRUCTURE TO DETERMINE THE EXTENT OF NECESSARY SHORING, NEEDLING AND UNDERPINNING. THE CAPACITY AND METHOD USED FOR SHORING AND NEEDLING SHALL BE THE RESPONSIBILITY OF THE CONTRACTOR.

## DEMOLITION NOTES

1. REMOVE EXISTING CONSTRUCTION AS SHOWN ON PLANS. SEE SECTIONS AND DETAILS FOR EXTENT OF STRUCTURE TO BE REMOVED.
2. EXISTING STRUCTURAL FRAMING SHALL REMAIN UNLESS SPECIFICALLY NOTED ON PLAN TO BE REMOVED.
3. IF FIELD CONDITIONS DIFFER FROM THOSE SHOWN ON DRAWINGS, NOTIFY STRUCTURAL ARCHITECT/ENGINEER BEFORE PROCEEDING WITH DEMOLITION.
4. IT SHALL BE THE CONTRACTOR'S RESPONSIBILITY TO EXAMINE THE EXISTING BUILDING DURING THE COURSE OF CONSTRUCTION AND IMMEDIATELY ADVISE THE ARCHITECT/ENGINEER OF ANY AREAS WHERE THE STRUCTURE EXHIBITS DISTRESS OR FAILURE.
5. IT IS THE CONTRACTOR'S RESPONSIBILITY TO SATISFY HIMSELF AS TO THE LOCATION OF ANY UTILITIES IN THE IMMEDIATE VICINITY OF CONSTRUCTION SO AS TO PREVENT DAMAGE TO THEM. SHOULD ANY DAMAGE TO SUCH UTILITIES OCCUR THE CONTRACTOR SHALL BE REQUIRED TO REPAIR SUCH DAMAGE AT HIS OWN EXPENSE AND TO THE SATISFACTION OF THE OWNER.

## FOUNDATIONS

1. ALL SPREAD FOOTINGS SHALL BEAR ON UNDISTURBED SOIL OR CONTROLLED STRUCTURAL FILL, HAVING A MINIMUM SAFE BEARING CAPACITY OF 2,000 PSF. ALL SPREAD FOOTINGS SHALL PROJECT AT LEAST 1'-0" INTO SOIL HAVING SUCH MINIMUM BEARING VALUE.
2. RETAIN THE SERVICES OF A REGISTERED GEOTECHNICAL ENGINEER, APPROVED BY THE ARCHITECT AND PAID FOR BY THE OWNER, TO VERIFY SOIL BEARING CAPACITY AT EACH FOOTING PRIOR TO INSTALLATION. NOTIFY ARCHITECT/ENGINEER OF ANY VARIATION FROM ANTICIPATED BEARING CAPACITY FOR APPROPRIATE REDESIGN OR LOWERING OF FOOTINGS.
3. COMPACT FILL AND BACKFILL TO 95% OF A.A.S.H.T.O. T-180. ALL FILL AND BACKFILL OPERATIONS SHALL BE PERFORMED UNDER THE DIRECT SUPERVISION OF THE GEOTECHNICAL ENGINEER.
4. ALL ORGANIC MATERIALS SHALL BE REMOVED IN REGIONS OF ALL FOUNDATIONS.
5. THE BOTTOMS OF ALL EXTERIOR FOOTINGS SHALL BE 2'-6" MINIMUM BELOW FINISHED GRADE.
6. EDGES OF FOOTINGS SHALL NOT BE PLACED AT A GREATER THAN 1 (VERTICAL) TO 2 (HORIZONTAL) SLOPE WITH RESPECT TO ANY ADJACENT FOOTING OR EXCAVATION. (UNO)
7. THE CONTRACTOR SHALL SAFEGUARD AND PROTECT ALL EXCAVATIONS.
8. NO HORIZONTAL JOINTS SHALL BE PLACED IN WALLS EXCEPT AS SHOWN ON THE DRAWINGS WITHOUT APPROVAL OF THE ARCHITECT/ENGINEER.
9. THE CONTRACTOR SHALL REFER TO THE ARCHITECTURAL, PLUMBING, MECHANICAL AND ELECTRICAL DRAWINGS FOR ALL LOCATIONS OF TRENCHES, PITS, CONDUITS, ETC. NOT SHOWN ON THE STRUCTURAL DRAWINGS.

## CONCRETE

1. ALL CONCRETE SHALL CONFORM TO THE PROVISIONS OF ACI BUILDING CODE REQUIREMENTS FOR REINFORCED CONCRETE (ACI 318-LATEST EDITION) AND ACI SPECIFICATIONS FOR STRUCTURAL CONCRETE IN BUILDINGS (ACI 301-LATEST EDITION).
2. ALL CONCRETE SHALL BE NORMAL WEIGHT CONCRETE HAVING A DESIGN COMPRESSIVE STRENGTH AT 28 DAYS AS FOLLOWS:
   A. FOOTINGS AND PIERS 3,000 PSI
   B. SLAB ON GRADE 3,000 PSI
3. NO CONCRETE SHALL BE PLACED UNTIL CONCRETE DESIGN MIXES HAVE BEEN SUBMITTED FOR EACH CLASS OF CONCRETE NOTED ABOVE AND HAVE BEEN APPROVED BY THE ARCHITECT/ENGINEER.
4. USE A WATER REDUCING ADMIXTURE IN ALL CONCRETE.
5. USE A MINIMUM OF 5 1/2 BAGS OF CEMENT AND A MAXIMUM OF 6 1/2 GALLONS OF WATER PER BAG FOR EACH CUBIC YARD OF CONCRETE.
6. SLUMP - AS REQUIRED BY ACI 302 - LATEST EDITION.
7. AIR ENTRAIN ALL EXPOSED CONCRETE 5% +/- 1%.
8. NO CALCIUM CHLORIDE IN ANY FORM WILL BE PERMITTED IN CONCRETE.
9. ALL STRUCTURAL MEMBERS SHALL BE POURED FOR THEIR FULL DEPTHS IN ONE OPERATION.
10. EXCAVATIONS SHALL BE KEPT FREE OF WATER. NO CONCRETE SHALL BE PLACED IN WATER.
11. ALL SLABS ON GRADE SHALL HAVE THICKENINGS, DEPRESSIONS, OPENINGS, ETC. AS SHOWN OR AS REQUIRED BY VARIOUS TRADES.
12. REFER TO ARCHITECTURAL DRAWINGS AND/OR SPECIFICATION SECTIONS FOR CONCRETE FINISHES.
13. RETAIN THE SERVICES OF AN INDEPENDENT TESTING AGENCY APPROVED BY THE ARCHITECT TO PERFORM TESTS OF CONCRETE. TAKE A MINIMUM OF 4 CYLINDERS FOR EACH CLASS OF CONCRETE POURED IN ANY ONE DAY. PERFORM 1 SLUMP TEST PER TRUCK LOAD OF CONCRETE.

## REINFORCEMENT

1. ALL DEVELOPMENT AND SPLICES OF REINFORCEMENT SHALL CONFORM TO THE PROVISIONS OF ACI BUILDING CODE REQUIREMENTS FOR REINFORCED CONCRETE (ACI 318-LATEST EDITION).
2. REINFORCING STEEL SHALL BE DEFORMED BARS OF INTERMEDIATE GRADE NEW BILLET STEEL CONFORMING TO CURRENT REQUIREMENTS OF ASTM A615 GRADE 60 EXCEPT TIES MAY BE GRADE 40. ALL HOOKS SHALL BE STANDARD HOOKS, UNLESS OTHERWISE NOTED.
3. WELDED WIRE FABRIC (W.W.F.) SHALL CONFORM TO ASTM A185 (LATEST EDITION).
4. ALL MESH SHALL BE SPLICED SO THAT THE OVERLAP OF THE OUTERMOST CROSS WIRES OF EACH ADJOINING SHEET IS NOT LESS THAN THE SPACING OF THE CROSS WIRES PLUS TWO INCHES, UNLESS NOTED OTHERWISE.
5. REINFORCING BAR SUPPORTS AND SPACERS SHALL CONFORM TO ACI 315-(LATEST EDITION) DETAILING MANUAL.
6. SHOP DRAWINGS SHOWING ALL NECESSARY SECTIONS AND DETAILS FOR THE PROPER POSITIONING OF ALL REINFORCING STEEL SHALL BE SUBMITTED TO THE ARCHITECT/ENGINEER FOR REVIEW BEFORE FABRICATION OR PLACEMENT OF THE STEEL.

## CONCRETE MASONRY

1. CONCRETE MASONRY CONSTRUCTION SHALL CONFORM TO ALL REQUIREMENTS OF BUILDING CODE REQUIREMENTS FOR MASONRY STRUCTURES (ACI 530-LATEST EDITION) AND ACI SPECIFICATIONS FOR MASONRY STRUCTURES (ACI 530.1-LATEST EDITION).
2. CONCRETE MASONRY UNITS (CMU) SHALL BE GRADE N, 2-CELL BLOCK WITH A MINIMUM COMPRESSIVE STRENGTH F'M=2500 PSI ON NET CROSS SECTION UNLESS OTHERWISE NOTED. CMU SHALL BE TYPE I FOR EXTERIOR AND FOUNDATION WALLS. TYPE I OR TYPE II MAY BE USED FOR INTERIOR PARTITION WALLS.
3. CONCRETE MASONRY UNITS SHALL CONFORM TO THE REQUIREMENTS OF THE MOST RECENT EDITIONS OF THE FOLLOWING STANDARDS:
   A. HOLLOW LOAD-BEARING UNITS ASTM C90
   B. SOLID LOAD-BEARING UNITS ASTM C145
   C. HOLLOW NON-LOAD-BEARING UNITS ASTM C129
   D. CONCRETE BUILDING BRICK ASTM C55
4. ALL CONCRETE MASONRY UNITS SHALL BE NORMAL WEIGHT.
5. MORTAR FOR REINFORCED AND NONREINFORCED MASONRY SHALL CONFORM TO THE REQUIREMENTS OF ASTM C270 (LATEST EDITION), TYPE S.
6. GROUT FOR REINFORCED OR NONREINFORCED MASONRY SHALL CONFORM TO THE REQUIREMENTS OF ASTM C476 (LATEST EDITION).
7. WHERE DRAWINGS INDICATE CELLS OF CONCRETE MASONRY UNITS (CMU) ARE TO BE FILLED SOLID, CELLS OF CMU SHALL BE FILLED WITH 3000 PSI PEA GRAVEL CONCRETE IN SIX COURSE MAXIMUM LIFTS.
8. WHERE DRAWINGS SPECIFY GROUT TO BE PROVIDED, 3000 PSI PEA GRAVEL CONCRETE CAN BE SUBSTITUTED IF APPLICABLE TO USE (3000 PSI PEA GRAVEL CONCRETE SHALL NOT BE USED UNDER COLUMN BASEPLATES OR BEARING PLATES).
9. ALL REINFORCEMENT SHOWN IN WALLS SHALL BE CENTERED IN MASONRY UNITS UNLESS NOTED OTHERWISE.
10. ALL BLOCK SHALL HAVE GALVANIZED, LADDER TYPE, HORIZONTAL JOINT REINFORCEMENT AT 16" O/C MAXIMUM WITH PREFABRICATED CORNER AND "T" PIECES UNLESS NOTED OTHERWISE. LAP ALL SPLICES 6" MINIMUM. PROVIDE AN ADDITIONAL ROW ABOVE AND BELOW ALL OPENINGS AND EXTEND TWO FEET BEYOND JAMBS. STOP HORIZONTAL REINFORCING EACH SIDE OF CONTROL JOINTS.
11. WHERE MASONRY WALLS OF HOLLOW UNITS OR MASONRY BONDED WALLS CHANGE IN THICKNESS, THE WALL SHALL BE FILLED SOLID WITH CONCRETE OR OTHERWISE CONSTRUCTED SOLID FOR AT LEAST ONE COURSE (8" MIN) IMMEDIATELY BELOW SUCH LEVEL WHERE THE THICKNESS CHANGES.

## STRUCTURAL STEEL

1. ALL STRUCTURAL STEEL SHALL CONFORM TO THE AISC SPECIFICATIONS FOR THE DESIGN, FABRICATION, AND ERECTION OF STRUCTURAL STEEL FOR BUILDINGS
2. STRUCTURAL STEEL SHALL CONFORM TO THE FOLLOWING ASTM DESIGNATIONS:
   A. STRUCTURAL STEEL SHAPES, BARS, AND PLATES - A572 HAVING A MINIMUM YIELD STRENGTH OF 50 KSI.
   B. ROUND PIPE - A501 HAVING A MINIMUM YIELD STRENGTH OF 36 KSI OR A500, GRADE B HAVING A MINIMUM YIELD STRENGTH OF 42 KSI.
   C. SQUARE AND RECTANGULAR TUBING - A500, GRADE B HAVING MINIMUM YIELD STRENGTH OF 46 KSI.
3. BOLTS SHALL CONFORM TO THE FOLLOWING ASTM DESIGNATIONS:
   A. HIGH STRENGTH BOLTS - A325
   B. ANCHOR BOLTS - A307 A36.
4. ALL BOLTS SHALL BE 3/4" DIAMETER, OPEN HOLES 13/16" DIAMETER, UNLESS OTHERWISE SHOWN OR NOTED.
5. WELDING SHALL BE IN ACCORDANCE WITH AWS CODE FOR WELDING IN BUILDING CONSTRUCTION (AWS D1.1) AND SHALL BE PERFORMED BY CERTIFIED WELDERS. ALL WELDS SHALL BE MADE WITH AWS A5.1 E-70XX ELECTRODES.
6. ALL SHOP CONNECTIONS SHALL BE HIGH STRENGTH BOLTED OR WELDED.
7. ALL FIELD CONNECTIONS SHALL BE HIGH STRENGTH BOLTED EXCEPT WHERE DETAILS INDICATE WELDING.
8. NO PENETRATIONS ARE PERMITTED THROUGH STRUCTURAL STEEL MEMBERS UNLESS INDICATED ON STRUCTURAL DRAWINGS OR APPROVED BY ARCHITECT/ENGINEER.
9. APPROVAL OF THE ARCHITECT/ENGINEER SHALL BE MANDATORY FOR THE USE OF CUTTING TORCH IN THE FIELD.
10. DURING ERECTION, STRUCTURAL STEEL FRAME SHALL BE ADEQUATELY BRACED IN ALL LINES, TWO WAYS, TO BRACE AND HOLD THE STEEL FRAME IN ALIGNMENT UNTIL ALL NEW WALLS, COLUMN, FOOTINGS AND NEW FLOOR IS IN PLACE AND CONCRETE FLOOR IS POURED AND FULLY CURED.
11. CONNECTIONS SHALL BE DESIGNED PER AISC TO CARRY FULL CAPACITY OF UNIFORMLY LOADED MEMBER, UNLESS NOTED OTHERWISE. REACTIONS GREATER THAN FULL MEMBER CAPACITY ARE INDICATED THUS (60K) ON PLAN. REACTIONS WHICH ARE SHOWN ON PLAN ARE IN UNITS OF KIPS (1000 LBS).
12. ALL GROUT UNDER STEEL PLATES SHALL BE NON-SHRINK "PRE-MIX" TYPE AND SHALL HAVE A MINIMUM COMPRESSIVE STRENGTH OF 5000 PSI.
13. FOR ALL MISCELLANEOUS STEEL CONSTRUCTION NOT SHOWN ON STRUCTURAL DRAWINGS, SEE ARCHITECTURAL DRAWINGS.
14. STRUCTURAL STEEL SHALL BE INSPECTED IN THE FIELD BY AN INDEPENDENT TESTING AGENCY APPROVED BY THE ARCHITECT AND PAID FOR BY THE CONTRACTOR.

## STRUCTURAL STEEL SHOP DRAWINGS

SHOP DRAWINGS SHOWING ALL OF THE SECTIONS AND DETAILS NECESSARY FOR THE PROPER PLACEMENT AND CONNECTION OF ALL STRUCTURAL STEEL, STEEL JOISTS AND JOIST GIRDERS SHALL BE SUBMITTED TO THE ARCHITECT/ENGINEER FOR REVIEW AND COMMENT PRIOR TO FABRICATION AND ERECTION.

## SUPERSTRUCTURE CONCRETE (SUPPORTED BY METAL DECK)

1. ALL CONCRETE ON METAL DECK SHALL BE NORMAL WEIGHT CONCRETE HAVING A DESIGN COMPRESSIVE STRENGTH OF 3,000 PSI AT 28 DAYS.
2. NO CONCRETE SHALL BE PLACED UNTIL CONCRETE DESIGN MIXES HAVE BEEN SUBMITTED FOR EACH CLASS OF CONCRETE AND HAVE BEEN REVIEWED BY THE ARCHITECT/ENGINEER.
3. WELDED WIRE FABRIC (W.W.F.) SHALL CONFORM TO ASTM A185 (LATEST EDITION).
4. PROVIDE 6X6-W1.4 X W1.4 WELDED WIRE FABRIC IN ALL CONCRETE SLABS ON METAL DECK UNLESS NOTED OTHERWISE.
5. ALL WELDED WIRE FABRIC SHALL BE SPLICED SO THAT THE OVERLAP BETWEEN OUTERMOST CROSS WIRES OF EACH SHEET IS NOT LESS THAN THE SPACING OF THE CROSS WIRES PLUS 2 INCHES, UNLESS OTHERWISE SHOWN ON DRAWINGS.
6. THE CONTRACTOR SHALL CALCULATE AND INCLUDE ALL ADDITIONAL CONCRETE THAT MAY BE REQUIRED DURING PLACING DUE TO DEFLECTION OF STRUCTURE.
7. THE CONTRACTOR SHALL DEPOSIT ALL CONCRETE, DURING PLACING, IN SUCH A MANNER AS NOT TO OVERLOAD THE METAL DECK.

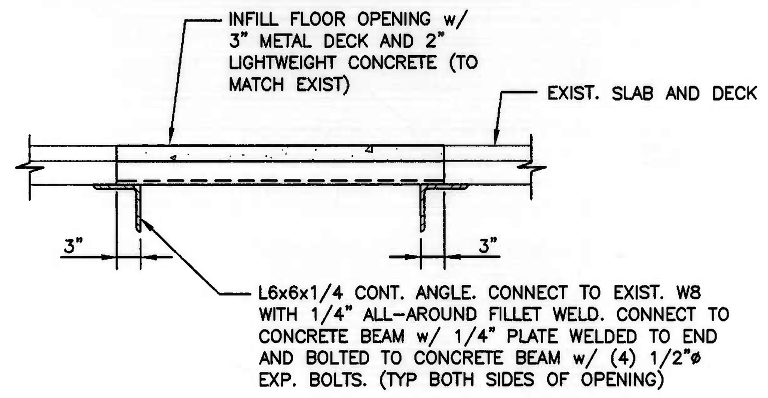


TYP. FLOOR OPNG. INFILL DETAIL
3/4" = 1'-0"

## STEEL JOISTS

1. OPEN WEB STEEL JOISTS SHALL BE FABRICATED AND ERECTED IN ACCORDANCE WITH THE LATEST EDITION OF THE STEEL JOIST INSTITUTE STANDARD SPECIFICATIONS AND CODE OF STANDARD PRACTICE AND SHALL BE FABRICATED BY A SJI MEMBER COMPANY.
2. THE ENDS OF STEEL JOISTS SHALL EXTEND A MINIMUM DISTANCE OF 2-1/2 INCHES OVER STEEL SUPPORT AND 4 INCHES OVER ALL OTHER SUPPORTS. FASTEN ENDS BY BOLTING OR WELDING.
3. PROVIDE AND INSTALL HORIZONTAL AND/OR DIAGONAL BRIDGING AS SHOWN ON THE PLANS AND IN ACCORDANCE WITH SJI'S AND OSHA'S RECOMMENDATIONS. ANCHORS AT EACH LINE OF BRIDGING SHALL BE PROVIDED. BRIDGING SHALL BE WELDED TO JOISTS AND BEAMS AND ANCHORED TO MASONRY AS INDICATED. END BAYS OF EACH JOIST RUN SHALL HAVE BOTH HORIZONTAL AND DIAGONAL BRIDGING UNLESS NOTED OTHERWISE.
4. ALL BRIDGING SHALL BE IN PLACE AND ANCHORED BEFORE DECK INSTALLATION.
5. NO CONSTRUCTION LOADS SHALL BE PLACED ON THE JOISTS AND/OR JOIST GIRDERS BEFORE THEY ARE PERMANENTLY FASTENED TO SUPPORTS AND ALL BRIDGING AND ANCHORS ARE COMPLETELY INSTALLED. ALL STRUT JOIST CONNECTIONS (SHOWN S.J. ON PLAN) SHALL BE INSTALLED AFTER THE INITIAL BUILDING DEAD LOADS (SUCH AS CONCRETE FLOORS) HAVE BEEN PLACED.
6. STEEL JOISTS SHALL BE INSPECTED IN THE FIELD BY AN INDEPENDENT TESTING AGENCY APPROVED BY THE ARCHITECT AND PAID FOR BY THE CONTRACTOR.

## METAL DECKING

1. METAL DECK SHALL CONFORM TO THE AISI (AMERICAN IRON AND STEEL INSTITUTE) SPECIFICATIONS FOR THE DESIGN OF LIGHT GAGE COLD-FORMED STRUCTURAL STEEL MEMBERS AND SDI CODE OF RECOMMENDED STANDARD PRACTICE
2. METAL DECKING SHALL BE MADE OF STEEL CONFORMING TO ASTM A446, GRADE A FOR GALVANIZED DECK AND/OR ASTM A611, GRADE C FOR PAINTED DECK HAVING A MINIMUM YIELD STRENGTH OF 33,000 PSI. CORRUGATED METAL DECKING FOR PERMANENT FORMWORK (FORM DECK) SHALL BE MADE OF STEEL CONFORMING TO ASTM A446, GRADE E WITH A MINIMUM YIELD STRENGTH OF 80,000 PSI.
3. COMPOSITE FLOOR DECKING AND ROOF DECKING SHALL HAVE A PROTECTIVE ZINC COATING CONFORMING TO ASTM A525, G-60. CORRUGATED METAL FLOOR DECK FOR PERMANENT FORMWORK SHALL BE PAINTED.
4. ALL METAL DECK HAS BEEN DESIGNED TO BE CONTINUOUS OVER THREE SPANS MINIMUM, AND SHALL BEAR AT LEAST 2" ON STEEL SUPPORTS. FOR ONE OR TWO SPAN CONDITIONS, THE CONTRACTOR SHALL PROVIDE SHORING AS REQUIRED, OR FURNISH HIGHER GAGE DECK AS REQUIRED TO SUPPORT ALL THE APPLICABLE LOADS. CONTRACTOR SHALL SUBMIT ALTERNATE FOR APPROVAL.
5. DECK SHALL BE WELDED TO SUPPORTING STEEL AT ENDS OF UNITS AND AT ALL INTERMEDIATE SUPPORTS IN ACCORDANCE WITH MANUFACTURER'S RECOMMENDATIONS. SIDE LAPS SHALL BE WELDED OR SCREWED AT 3' O/C MAXIMUM FOR SPANS OVER 5'. USE WELDING WASHERS FOR ATTACHING METAL DECK OF 23 GAGE OR LIGHTER.
6. PROVIDE RIDGE AND VALLEY PLATES, STANDARD CLOSURES, CANT STRIPS, POUR STOPS AND OTHER ACCESSORIES AS SHOWN ON DRAWINGS OR AS REQUIRED.
7. METAL DECK SHALL HAVE THE FOLLOWING MINIMUM PROPERTIES PER FOOT WIDTH:
   A. 9/16 CORRUGATED (FORM DECK) 26 GAGE (0.0179 INCH):
      I= 0.015 IN$^4$
      SP= 0.046 IN$^3$
      SN= 0.048 IN$^3$
8. PROVIDE STEEL LEDGER ANGLE 2 1/2" X 2 1/2" X 1/4" AT STEEL COLUMNS AS REQUIRED FOR SUPPORT OF METAL DECKING.
9. METAL DECK SHALL BE INSPECTED IN THE FIELD BY AN INDEPENDENT TESTING AGENCY APPROVED BY THE ARCHITECT AND PAID FOR BY THE CONTRACTOR.

## LINTELS

1. PROVIDE LINTELS OVER ALL PENETRATIONS IN NEW & EXISTING MASONRY WALLS AT DOORS, WINDOWS, MECHANICAL AND ELECTRICAL SERVICES AND EQUIPMENT, ETC., AND AT LOCATIONS NOT SPECIFICALLY SHOWN ON THE DRAWINGS, IN ACCORDANCE WITH THE LINTEL SCHEDULE.
2. LINTELS IN CONCRETE MASONRY WALLS SHALL BE PRECAST CONCRETE TO MATCH THE TEXTURE, APPEARANCE AND THICKNESS OF THE WALLS OR PARTITIONS IN WHICH THEY ARE PLACED. PROVIDE PRECAST CONCRETE LINTELS PER PRECAST LINTEL SCHEDULE UNLESS OTHERWISE INDICATED.
3. CONTRACTOR SHALL SHORE ALL LINTELS AS REQUIRED TO PREVENT ROTATION DURING CONSTRUCTION.
4. CONTRACTOR SHALL COORDINATE SIZE AND TYPE OF LINTEL WITH ARCHITECTURAL, PLUMBING, MECHANICAL AND ELECTRICAL DRAWINGS.
5. CONTRACTOR SHALL PROVIDE SHORING AND/OR BRACING OF EXISTING WALLS AS REQUIRED TO INSTALL NEW LINTELS. METHOD OF SHORING AND/OR BRACING SHALL BE THE RESPONSIBILITY OF THE CONTRACTOR.
6. ALL LINTELS TO HAVE SOLID BEARING, 8" MINIMUM, EACH END.

### LINTEL SCHEDULE

| MARK | SIZE | COMMENTS |
|---|---|---|
| L-1 | L4 X 3-1/2 X 5/16 LLV FOR EACH 4" OF WALL THICKNESS. UP TO 6'-0" OPENINGS | FOR CAVITY WALLS, USE 1-L6 X 6 X 5/16 LLV FOR VENEER. |
| L-2 | L6 X 3-1/2 X 5/16 LLV FOR EACH 4" OF WALL THICKNESS. 6'-1" TO 8'-0" OPENINGS | FOR CAVITY WALLS, USE 1-L6 X 6 X 5/16 LLV FOR VENEER. |
| L-3 | W8X31 WITH SUSPENDED PLATE. 8'-1" TO 10'-0" OPENINGS. | |
| P-1 | 1-4 X 8 PRECAST LINTEL WITH 1-#4 BOTTOM BAR FOR EACH 4" OF WALL THICKNESS. UP TO 3'-0" OPENINGS. | FOR CAVITY WALLS, USE 1-6 X 8 PRECAST LINTEL W/ 1-#4 BOTTOM BAR FOR VENEER |
| P-2 | 1-4 X 8 PRECAST LINTEL WITH 1-#4 TOP AND BOTTOM BAR FOR EACH 4" OF WALL THICKNESS. 3'-1" TO 6'-0" OPENINGS. | FOR CAVITY WALLS, USE 1-6 X 8 PRECAST LINTEL WITH 1-#4 TOP AND BOTTOM BAR FOR VENEER. |
| P-3 | 1-4 X 8 PRECAST LINTEL WITH 1-#4 TOP AND BOTTOM BAR FOR EACH 4" OF WALL THICKNESS. 6'-1" TO 8'-0" OPENINGS. | FOR CAVITY WALLS, USE 1-6 X 8 PRECAST LINTEL WITH 1-#5 TOP AND BOTTOM BAR FOR VENEER. |

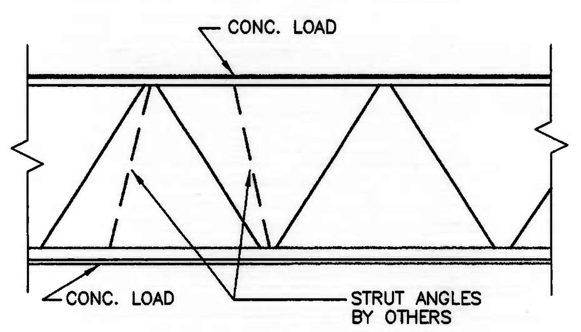


TYP JOIST REINFORCEMENT @ CONCENTRATED LOADS
3/4"=1'-0"

WHEN LOADS OCCUR AT A DISTANCE MORE THAN 4" FROM A PANEL POINT, A STRUT ANGLE MUST BE FURNISHED AND INSTALLED BY OTHERS IN THE FIELD, TO CARRY THE LOAD TO AN OPPOSITE PANEL POINT AS SHOWN.

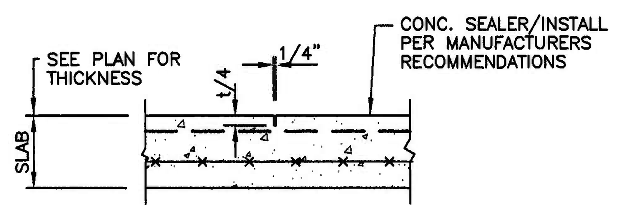


TYP SAW-CUT JOINT DETAIL
NO SCALE

NOTES:
1. CUT ALTERNATE WIRES CROSSING JOINT.
2. SAW-CUTS ARE LOCATED ON PLAN.
3. SAW-CUTTING SHALL BE STARTED AS SOON AS THE CONCRETE HAS HARDENED SUFFICIENTLY TO PREVENT AGGREGATE BEING DISLODGED BY THE SAW AND WHEN THE EDGES OF THE CUT DO NOT RAVEL.

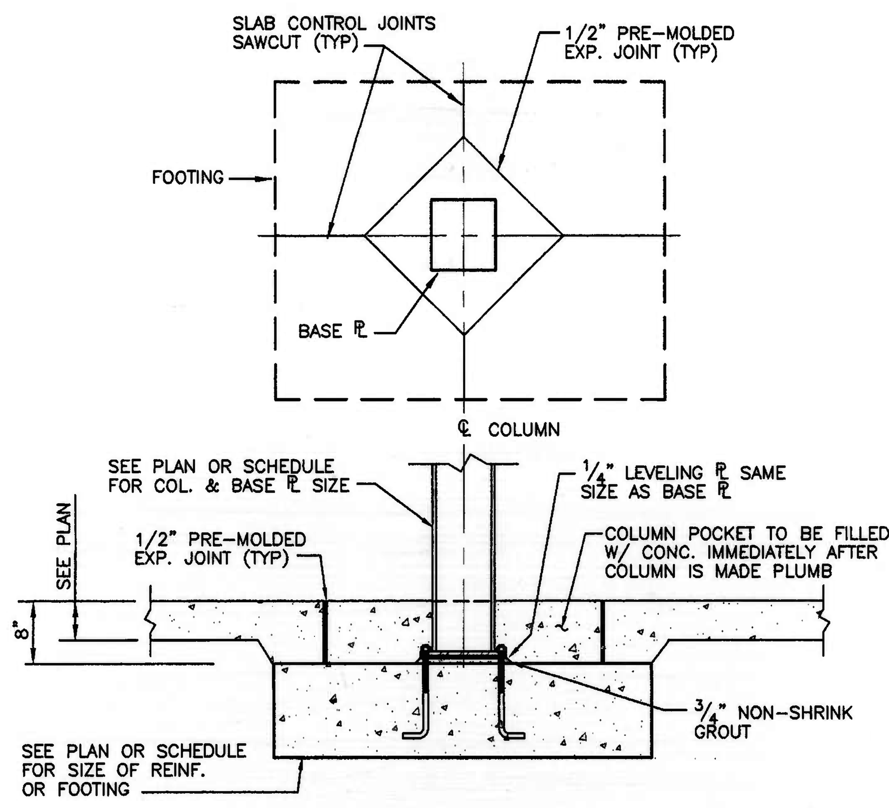


TYP INTERIOR COLUMN FOOTING
3/4" = 1'-0"

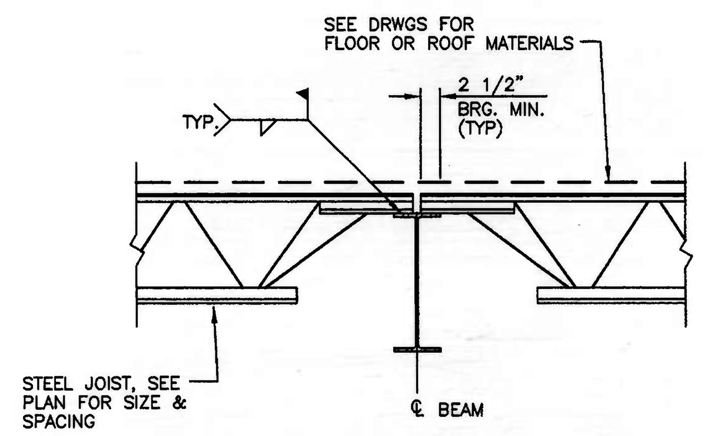


TYP JOIST BRG. @ BEAM
3/4" = 1'-0"

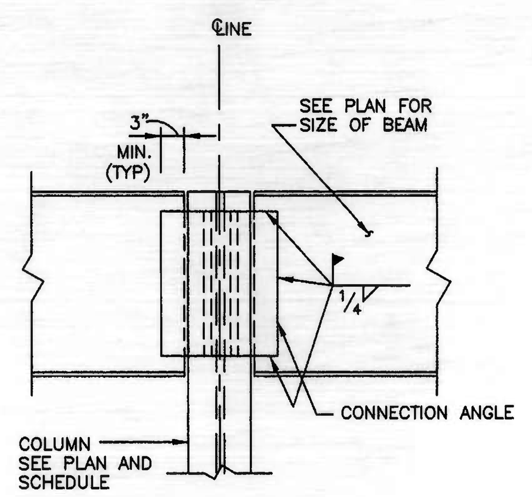


TYP. BEAM CONNECTION TO COLUMN DETAIL
3/4"=1'-0"

RENOVATIONS TO THE CLASSROOM BUILDING

CCBC DUNDALK CAMPUS
7200 Sollers Point Road
Baltimore, Maryland 21222-4694

CS&D


Architect
Cochran, Stephenson & Donkervoet, Incorporated
The Warehouse at Camden Yards
323 West Camden Street, Suite 700
Baltimore, Maryland 21201
Phone: 410-539-2080 Fax: 410-752-5263

Mechanical/Electrical Engineer
Gipe Associates, Inc.
Dulaney Center 1 Suite 102
849 Fairmount Avenue
Towson, Maryland 21286
Phone: 410-832-2420 Fax: 410-832-2418

Civil/Structural Engineer
Carroll Engineering, Inc.
61 East Padonia Road Suite C
Timonium, Maryland 21093
Phone: 410-252-6211 Fax: 410-560-0071


| No. | Date | Revisions |
|---|---|---|

Project No.: 0045-01
Date: 01/24/02
Scale: AS NOTED
Sheet Title: GENERAL NOTES & TYPICAL DETAILS
Sheet No.: S-2

D-022070