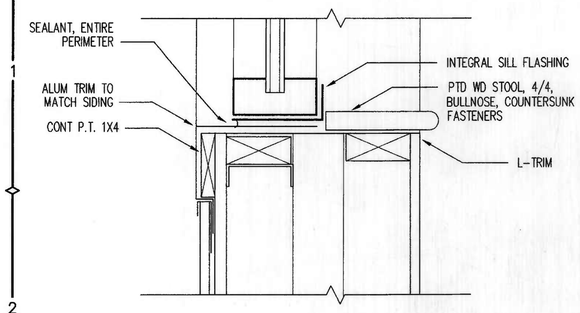

SECTION DETAIL 3" = 1'-0" C2

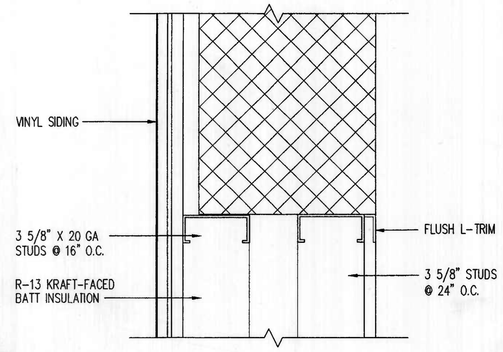

PLAN DETAIL 3" = 1'-0" F2

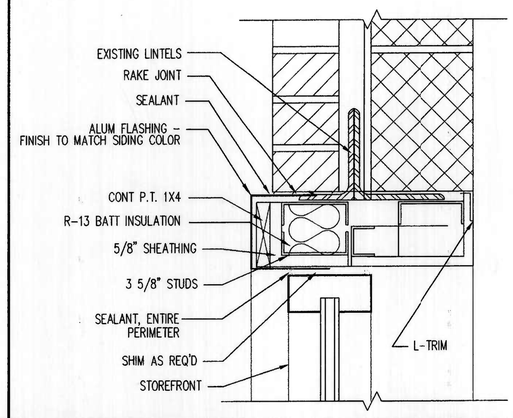

SECTION DETAIL 3" = 1'-0" H2

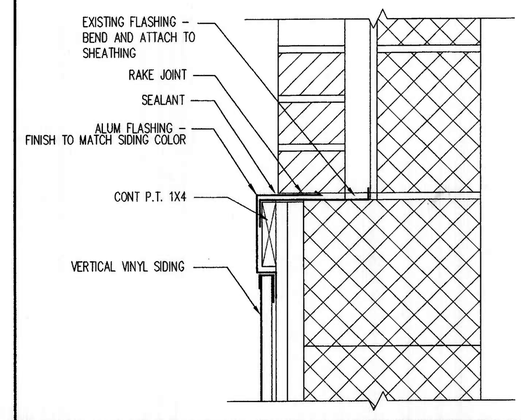

SECTION DETAIL 3" = 1'-0" K2

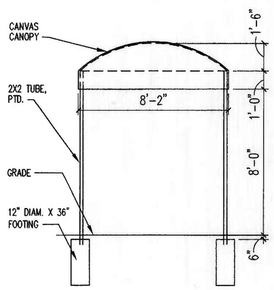

CANOPY ELEVATION 1/4" = 1'-0" B4

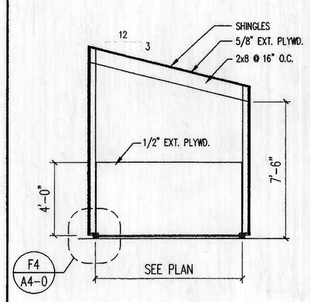

SHED SECTION 1/4" = 1'-0" C4

F3

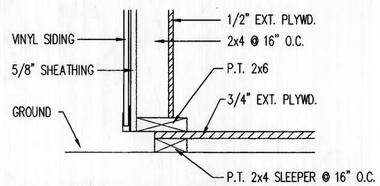

SHED DETAIL 1 1/2" = 1'-0" F4

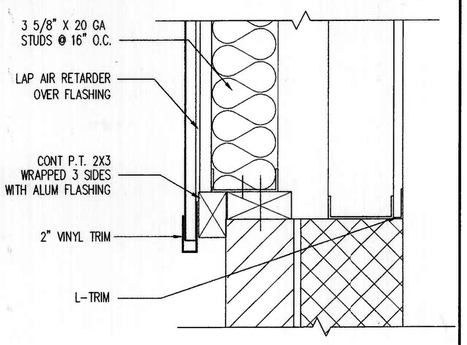

SECTION DETAIL 3" = 1'-0" H4

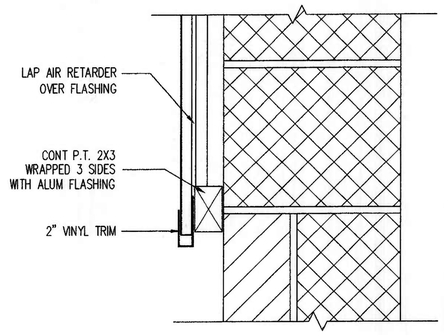

SECTION DETAIL 3" = 1'-0" K4

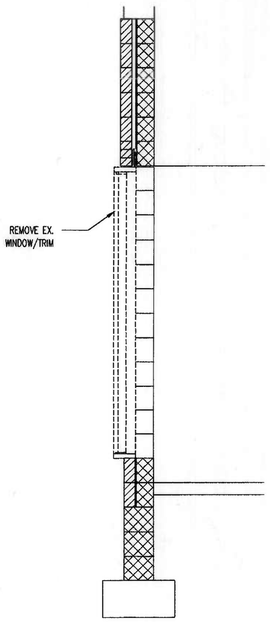

WALL SECTION 1 1/2" = 1'-0" B7

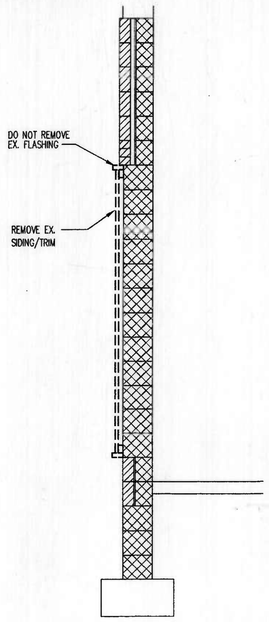

WALL SECTION 2 1/2" = 1'-0" C7

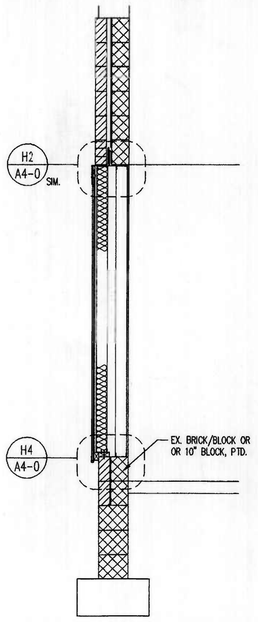

WALL SECTION 3 1/2" = 1'-0" E7

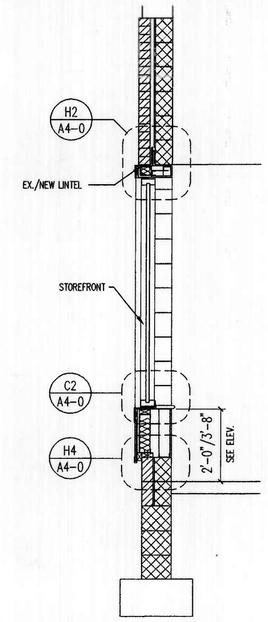

WALL SECTION 4 1/2" = 1'-0" F7

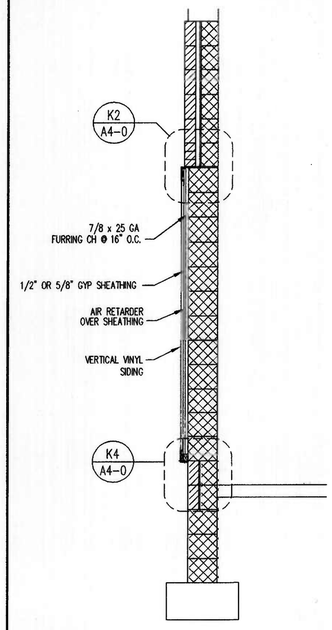

WALL SECTION 5 1/2" = 1'-0" H7

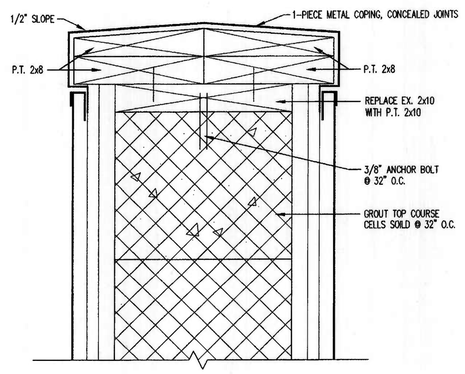

SECTION DETAIL 3" = 1'-0" K7

Modifications to the Child Care Center
CCBC Dundalk

CS&D

Architect
Cochran, Stephenson & Donkervoet, Incorporated
The Warehouse at Camden Yards
300 West Camden Street, Suite 700
Baltimore, Maryland 21201

Mechanical/Electrical Engineer
Gipe Associates, Inc.

Civil/Structural Engineer
Carroll Engineering, Inc.

No.	Date	Revisions

Project No.: 0045

Date: 03/16/01

Scale: AS NOTED

Sheet Title:
DETAILS

Sheet No.:
A4-0

D-021040

K:\DATA\2000 projects\0045CCBCDundalk\045-A4DCH.dwg Wed Mar 21 08:17:40 2001