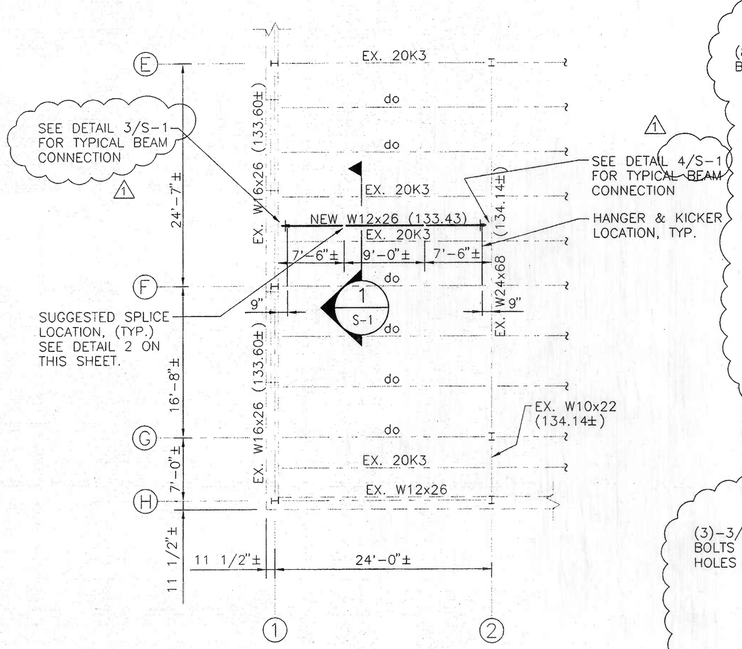

PARTIAL ROOF FRAMING PLAN

1/8" = 1'-0"

PLAN NOTES:

1. ELEVATION TOP OF NEW AND EXISTING STEEL BEAMS INDICATED (XXX.XX) ON PLAN.

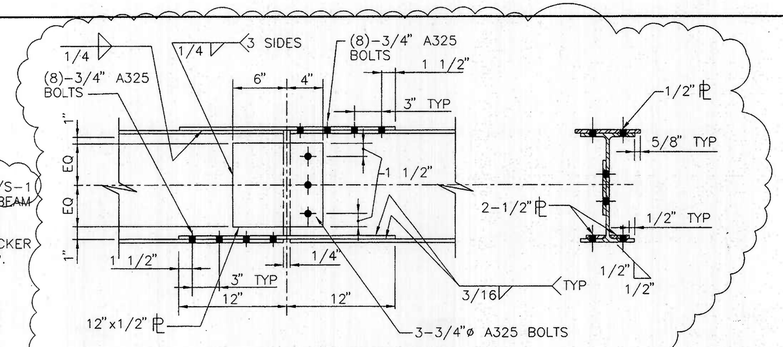

NOTE: SEE PLAN FOR SUGGESTED SPLICE LOCATIONS. SUBMIT SHOP DRAWING, SHOW ALL SPLICE LOCATIONS.

TYPICAL BEAM SPLICE

2 S-1 DETAIL

NOT TO SCALE

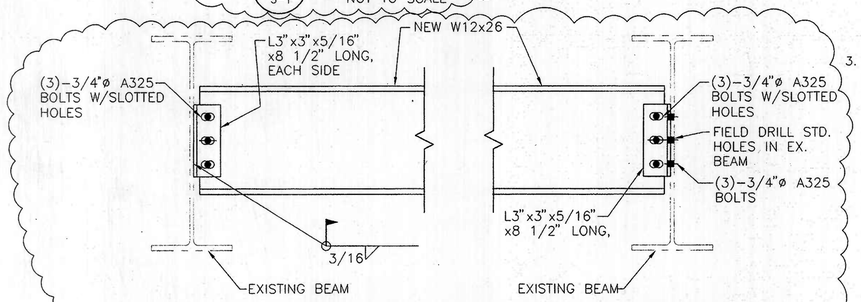

TYPICAL BEAM CONNECTION TO EXISTING EXTERIOR BEAM

3 S-1 DETAIL

NOT TO SCALE

TYPICAL BEAM CONNECTION TO EXISTING INTERIOR BEAM

4 S-1 DETAIL

NOT TO SCALE

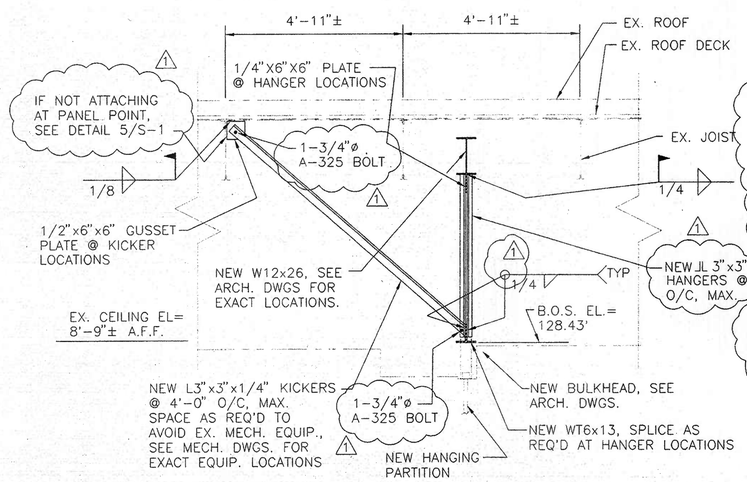

1 S-1 SECTION

1/2" = 1'-0"

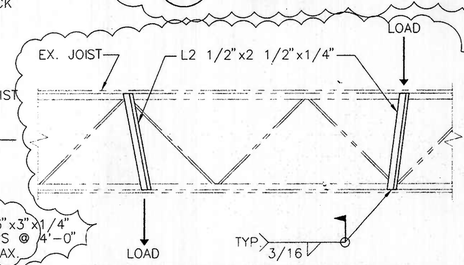

WHERE LOADS ARE APPLIED TO JOIST BETWEEN PANEL POINTS, REINFORCE AS SHOWN. LOADS INCLUDE BUT ARE NOT LIMITED TO MECHANICAL EQUIPMENT AND PIPES.

TYPICAL JOIST REINFORCEMENT

5 S-1 DETAIL

SCALE: N.T.S.

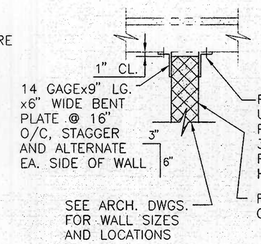

6 A-4 DETAIL

NOT TO SCALE

GENERAL NOTES

1. CODE

   A. ALL CONSTRUCTION SHALL CONFORM WITH THE PROVISIONS OF THE 1993 BOCA CODE, AND ITS SUPPLEMENTS.

2. GENERAL

   A. THE CONTRACTOR SHALL FIELD CHECK AND VERIFY ALL DIMENSIONS AND ELEVATIONS OF EXISTING WORK PRIOR TO FABRICATION OF ANY NEW MATERIALS.

   B. THE CONTRACTOR SHALL CHECK AND VERIFY ALL DIMENSIONS BEFORE PROCEEDING WITH CONSTRUCTION. ALL DISCREPANCIES SHALL BE BROUGHT TO THE ATTENTION OF THE ARCHITECT.

   C. THE CONTRACTOR IS ADVISED THAT ALL PLANS, DIMENSIONS, AND DETAILS DEPICT FIELD CONDITION AS SHOWN. MINOR VARIATIONS ARE TO BE EXPECTED AND ANY DEVIATIONS FROM THE CONTRACT DOCUMENTS SHALL BE APPROVED BY THE ARCHITECT IN WRITING PRIOR TO PROCEEDING.

   D. IT SHALL BE THE CONTRACTOR'S RESPONSIBILITY TO EXAMINE THE EXISTING BUILDING DURING THE COURSE OF CONSTRUCTION AND IMMEDIATELY ADVISE THE ARCHITECT OF ANY AREAS WHERE THE STRUCTURE EXHIBITS DISTRESS OR FAILURE.

   E. IT IS THE CONTRACTOR'S RESPONSIBILITY TO SATISFY HIMSELF AS TO THE LOCATION OF ANY UTILITIES AND MECHANICAL AND ELECTRICAL EQUIPMENT IN THE IMMEDIATE VICINITY OF CONSTRUCTION SO AS TO PREVENT DAMAGE TO THEM. SHOULD ANY DAMAGE TO SUCH UTILITIES OCCUR THE CONTRACTOR SHALL BE REQUIRED TO REPAIR SUCH DAMAGE AT HIS OWN EXPENSE AND TO THE SATISFACTION OF THE OWNER.

3. STRUCTURAL AND MISCELLANEOUS STEEL

   A. ALL STRUCTURAL AND MISCELLANEOUS STEEL SHALL CONFORM TO THE NINTH EDITION OF THE AISC "SPECIFICATION FOR THE DESIGN, FABRICATION AND ERECTION OF STRUCTURAL STEEL FOR BUILDINGS" AND ALL ITS SUPPLEMENTS, AND TO THE AISC "CODE OF STANDARD PRACTICE FOR STEEL BUILDINGS AND BRIDGES."

   B. ALL STRUCTURAL AND MISCELLANEOUS STEEL SHALL CONFORM TO ASTM A-36 HAVING A MINIMUM YIELD STRENGTH OF 36,000 PSI.

   C. ALL WELDED CONNECTIONS SHALL BE DONE WITH E70XX ELECTRODES. ALL BOLTED CONNECTIONS SHALL USE 3/4ø ASTM A325N HIGH STRENGTH BOLTS. ALL BEAM CONNECTIONS SHALL DEVELOP THE FULL UNIFORM LOAD CAPACITY THE MEMBER CAN CARRY WITH DUE CONSIDERATION TO CONCENTRATED LOADS AT THE ENDS OF THE MEMBER. NO CONNECTION SHALL BE MADE USING LESS THAN TWO BOLTS. ALL ANCHOR BOLTS SHALL BE ASTM A-307.

   D. SHOP AND FIELD WELDS SHALL BE MADE BY APPROVED CERTIFIED WELDERS AND SHALL CONFORM TO THE AMERICAN WELDING SOCIETY CODE FOR BUILDINGS AWS D1.1. WELDS SHALL DEVELOP THE FULL STRENGTH OF MATERIALS BEING WELDED, UNLESS OTHERWISE NOTED.

   E. NO OPENINGS IN BEAMS SHALL BE PERMITTED WITHOUT THE WRITTEN PERMISSION OF THE ARCHITECT.

   F. THE USE OF GAS-CUTTING TORCH IN THE FIELD FOR CUTTING HOLES OR FOR CORRECTION OF FABRICATION ERRORS WILL NOT BE PERMITTED ON NEW STRUCTURAL FRAMING MEMBERS, EXCEPT WITH THE WRITTEN APPROVAL OF THE ARCHITECT FOR EACH SPECIFIC CONDITION.

   G. ALL STRUCTURAL STEEL SHALL BE SHOP PAINTED WITH AN APPROVED CORROSION RESISTANT PRIMER.

   H. THE CONTRACTOR SHALL SUBMIT STRUCTURAL SHOP DRAWINGS SHOWING COMPLETE DETAILS AND SCHEDULES FOR FABRICATION, ASSEMBLY, AND ERECTION.

4. WELDING PROCEDURES

   A. THE CONTRACTOR SHALL PROVIDE THE DUNDALK COMMUNITY COLLEGE FACILITIES DEPARTMENT AND THE LOCAL FIRE DEPARTMENT WITH THREE DAYS ADVANCE WRITTEN NOTICE OF WELDING OPERATIONS. BEFORE COMMENCING WELDING OPERATIONS, THE CONTRACTOR SHALL STATION TWO FULL 20-POUND DRY CHEMICAL FIRE EXTINGUISHERS IMMEDIATELY ADJACENT TO THE OPERATIONS AREA. DURING WELDING OPERATIONS, OPEN FLAMES SHALL BE SHIELDED FROM VIEW OF PASSERSBY. A WORKMAN SHALL REMAIN IN THE AREA OF WELDING OPERATIONS FOR ONE HOUR AFTER DISCONTINUING THESE OPERATIONS TO MAKE A THROROUGH INSPECTION OF THE AREA FOR POSSIBLE SOURCES OF LATENT COMBUSTION.

1 REVISIONS 3/6/97

Consulting Engineers
849 Fairmount Avenue
Baltimore, Md. 21286
(410) 512-4500
WHITNEY, BAILEY, COX & MAGNANI

Renovation of Dundalk Community College for the Baltimore County Police Academy Bureau of Egineering and Construction

FOLDING PARTITION SUPPORT

James Posey Associates, Inc.
Consulting Engineers
3112 Timonus Lane
Baltimore, Maryland 21244-2671
(410) 265-6100

COMM. NO.: 4325-96	ROAD PERMIT AND GRADES	REVISED AS PER RECORD PRINT	DATE	REVISION	BY
STATE OF MARYLAND DAVID T. LEWIS No. 17532 REGISTERED PROFESSIONAL ENGINEER	PERMIT REQUESTED / PERMIT NUMBER / GRADE ESTABLISHED / PROFILE NUMBER	DRAFTSMAN / DATE			

APPROVED _____ CHIEF

DATE _____

ENGINEER	DESIGNED JB	BUREAU OF ENGINEERING AND CONSTRUCTION	HIGHWAYS	STRUCTURES	STORM DRAINS	SEWER	WATER	FIELD ENGINEER
DATE / LIC. NO.	DRAWN DP	REVIEWED						
	CHECKED ML	DATE						

BUR. OF ENGINEERING & CONSTRUCTION — APPROVED _____ CHIEF — DATE _____

DEPARTMENT OF PUBLIC WORKS — APPROVED _____ DIRECTOR — DATE _____

P. W. A. DIR. NO. / KEY SHEET / RIGHT OF WAY / POSITION SHEET

SCALE — PLAN: 1/8"=1'-0" — PROFILE

BALTIMORE COUNTY DEPARTMENT OF PUBLIC WORKS BUREAU OF ENGINEERING & CONSTRUCTION

DUNDALK COMMUNITY COLLEGE RENOVATION

DUNDALK, MARYLAND

SUBDIVISION

D-020050

CONTRACT NO.

JOB ORDER NO.

SHEET 12 OF 27

DWG. NO. S-1

FILE: 97046-S1.DWG